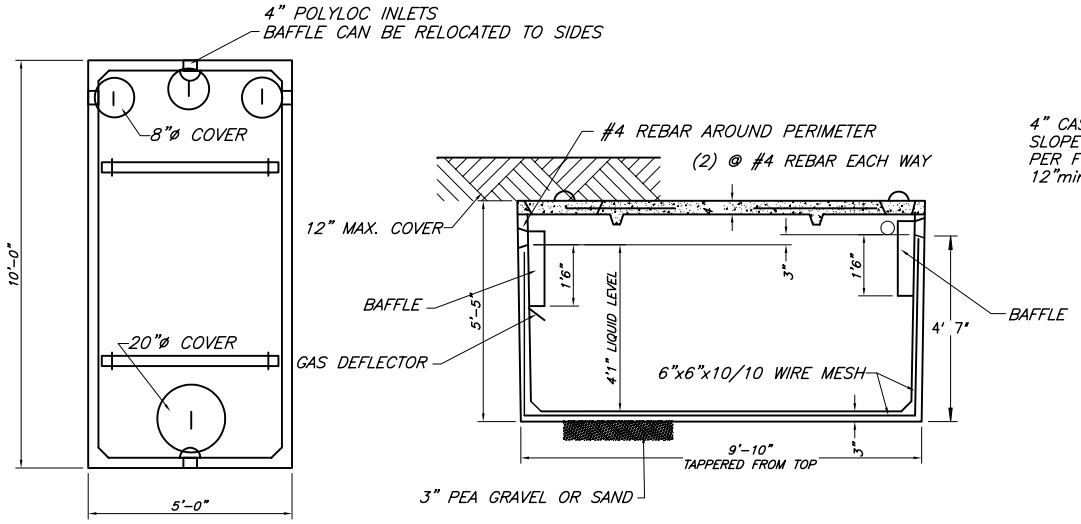

WOODARD'S 1,250gal. SEPTIC TANK OR EQUAL
N.T.S.

SPECIFICATIONS
CONCRETE MINIMUM STRENGTH– 4,000 PSI AT 28 DAYS REINFORCEMENT– 6"x6"10GA. WWF, #4 REBAR AIR ENTRAPMENT– 5% CONSTRUCTION JOINT– BUTYL RUBBER – BASE CEMENT PIPE CONNECTION– POLYLOC SEAL (PATENTED) LOAD RATING– 300PSF WEIGHT = 9,500LBS

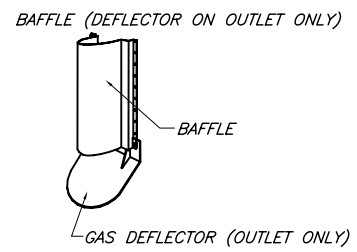

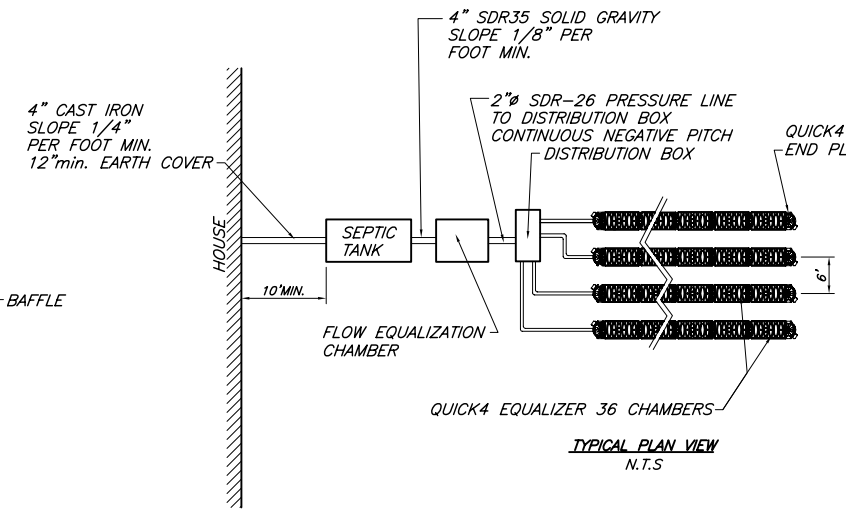

TYPICAL PLAN VIEW
N.T.S

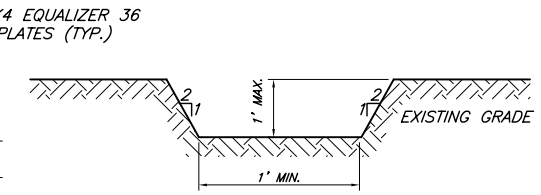

GRASS SWALE DETAIL
N.T.S.

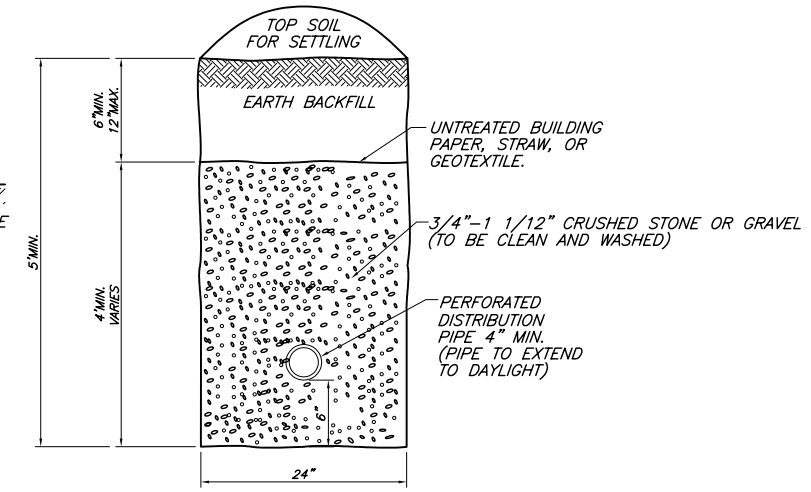

CURTAIN DRAIN
N.T.S.

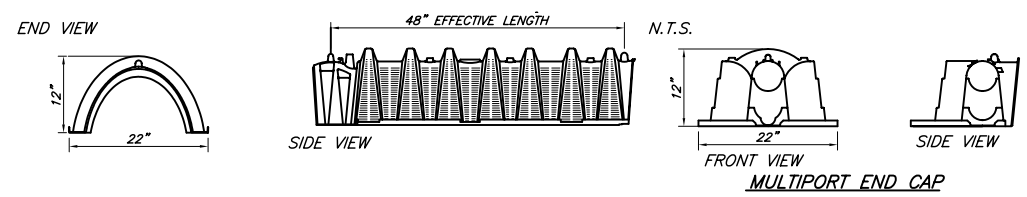

MULTIPORT END CAP

THE QUICK 4 EQUALIZER 36 CHAMBER

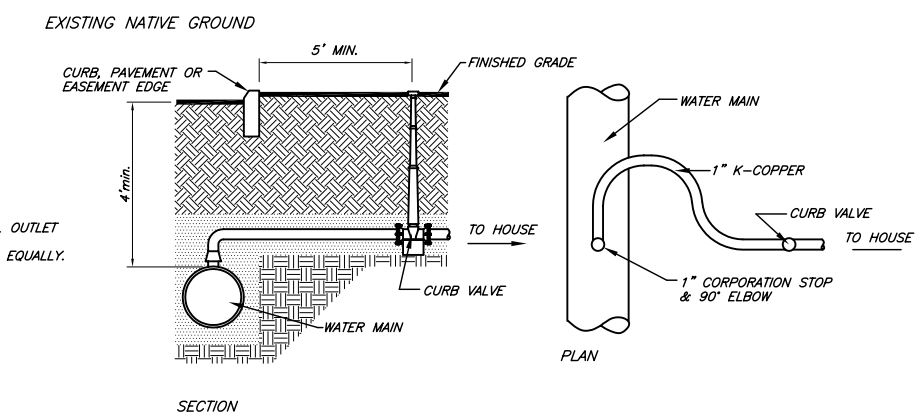

WATER SERVICE CONNECTION DETAIL
NO SCALE

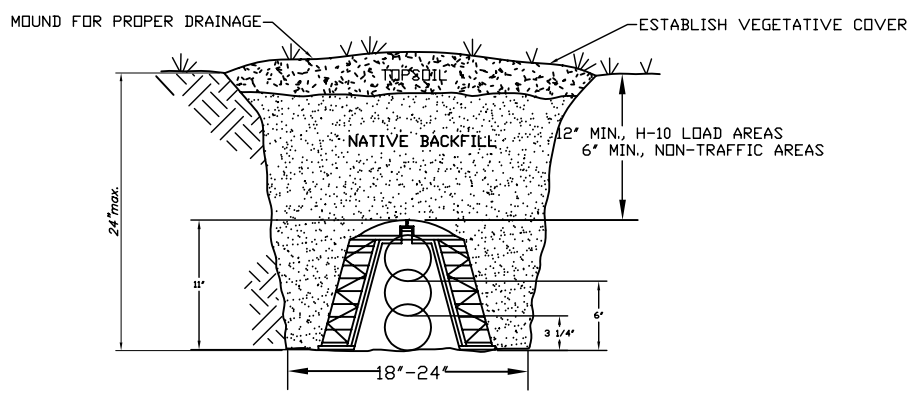

THE QUICK 4 EQUALIZER 36 CHAMBER ABSORPTION TRENCH DETAIL
N.T.S.

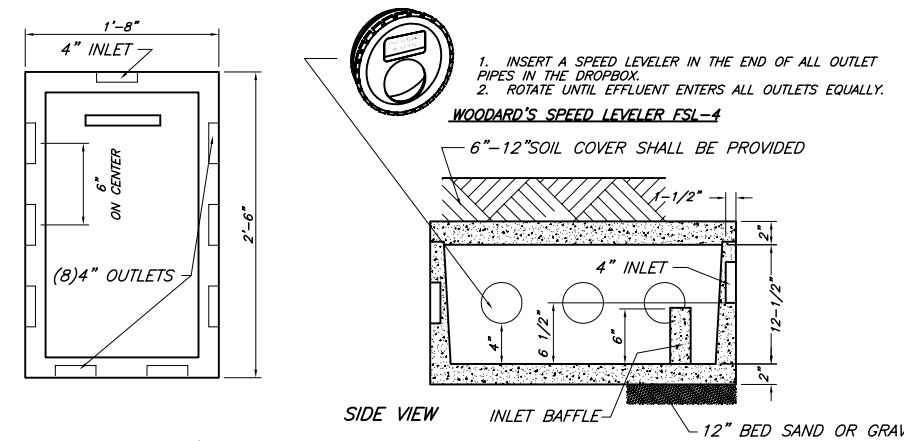

WOODARD'S PRECAST 8 OUTLET DISTRIBUTION BOX
N.T.S.

SPECIFICATIONS
CONCRETE MINIMUM STRENGTH– 4,000 PSI AT 28 DAYS REINFORCEMENT– FIBER AIR ENTRAPMENT– 5% PIPE CONNECTION: POLYLOK SEAL (PATENTED) LOAD RATING– 300 PSF WEIGHT= 290 lbs

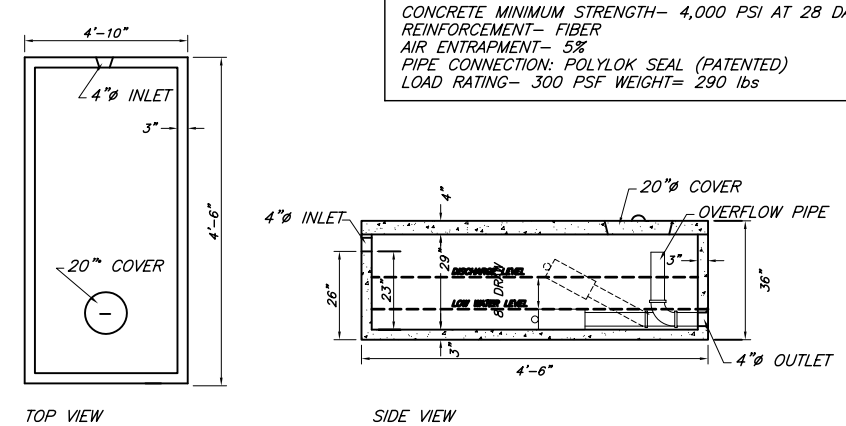

WOODARD'S PRECAST SIPHON CHAMBER (OR EQUAL)
N.T.S.

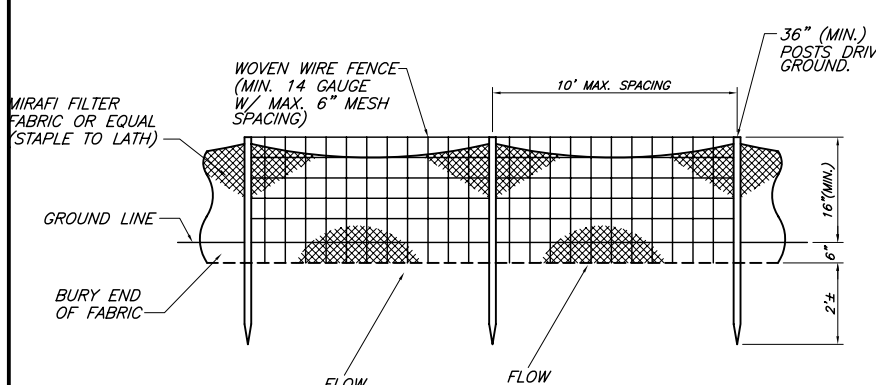

SILT FENCE DETAIL
N.T.S.

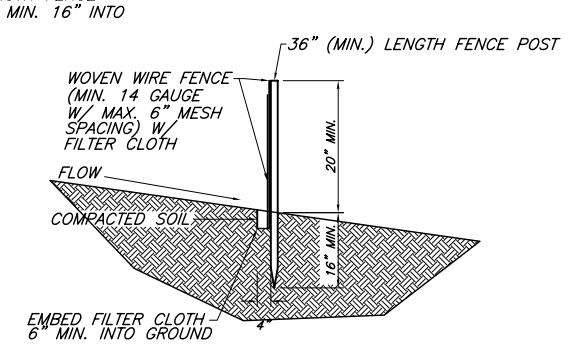

IT SHALL BE THE RESPONSIBILITY OF THE CONTRACTOR TO PROVIDE AND INITIALIZE EROSION CONTROL MEASURES, SILT FENCES ARE TO BE USED FOR SILTATION CONTROL AROUND ALL AREAS THAT WILL BE DISRUPTED DURING CONSTRUCTION, STRAW BALES ARE TO BE MAINTAINED TO THE SATISFACTION OF THE ENGINEER AND WILL BE REMOVED BY THE CONTRACTOR ONCE GROUND COVER IS REESTABLISHED.

SPECIFICATIONS
CONCRETE MINIMUM STRENGTH: 4,000 PSI AT 28 DAYS REINFORCEMENT: 6"X6"X10GA. WIRE MESH, #3 REBAR AIR ENTRAPMENT: 5% CONSTRUCTION JOINT: BUTYL RUBBER SEALANT PIPE CONNECTION: POLYLOK SEAL (PATENTED) LOAD RATING: 300 PSF

REVISIONS			
REV.:	DATE:	BY:	DESCRIPTION:
1	01/31/11	R.B.M.	PER TOWN COMMENTS

TOWN OF NEWBURGH WATER SERVICE NOTES

1. "CONSTRUCTION OF POTABLE WATER UTILITIES AND CONNECTION TO THE T.O.N. WATER SYSTEM REQUIRES A PERMIT FROM THE T.O.N. WATER DEPARTMENT. ALL WORK AND MATERIALS SHALL CONFORM TO THE REQUIREMENTS OF THE NYSDOH AND THE T.O.N."
2. ALL WATER SERVICE LINES FOUR (4) INCHES AND LARGER IN DIAMETER SHALL BE CEMENT LINED CLASS 52 DUCTILE IRON PIPE CONFORMING TO ANSI\AWWA C151\A21.51-91 FOR DUCTILE IRON PIPE. JOINTS SHALL BE EITHER PUSH-ON OR MECHANICAL JOINT AS REQUIRED.
3. THRUST RESTRAINT OF THE PIPE SHALL BE THROUGH THE USE OF JOINT RESTRAINT. THRUST BLOCKS ARE NOT ACCEPTABLE. JOINT RESTRAINT SHALL BE THROUGH THE USE OF MECHANICAL JOINT PIPE WITH RETAINER GLANDS. ALL FITTINGS AND VALVES SHALL BE INSTALLED WITH RETAINER GLANDS FOR JOINT RESTRAINT. RETAINER GLANDS SHALL BE EBBA IRON MEGALUG SERIES 1100 OR APPROVED EQUAL. THE USE OF A MANUFACTURED RESTRAINED JOINT PIPE IS ACCEPTABLE WITH PRIOR APPROVAL OF THE WATER DEPARTMENT.
4. ALL FITTINGS SHALL BE CAST IRON OR DUCTILE IRON, MECHANICAL JOINT, CLASS 250 AND CONFORM TO ANSI\AWWA C110\A21.10-87 FOR DUCTILE AND GRAY IRON FITTINGS OR ANSI\AWWA C153\A21.53-94 FOR DUCTILE IRON COMPACT FITTINGS.
5. ALL VALVES 4 TO 12 INCHES SHALL BE RESILIENT WEDGE GATE VALVES CONFORMING TO ANSI\AWWA C509 SUCH AS MUELLER MODEL A-2360-23 OR APPROVED EQUAL. ALL GATE VALVES SHALL OPEN LEFT (COUNTERCLOCKWISE).
6. TAPPING SLEEVE SHALL BE MECHANICAL JOINT SUCH AS MUELLER H-615 OR EQUAL. TAPPING VALVES 4 TO 12 INCHES SHALL BE RESILIENT WEDGE GATE VALVES CONFORMING TO ANSI\AWWA C509 SUCH AS MUELLER MODEL T-2360-19 OR APPROVED EQUAL. ALL TAPPING SLEEVES AND VALVES SHALL BE TESTED TO 150 PSI MINIMUM; TESTING OF THE TAPPING SLEEVE AND VALVE MUST BE WITNESSED AND ACCEPTED BY THE T.O.N. WATER DEPARTMENT PRIOR TO CUTTING INTO THE PIPE.
7. ALL WATER SERVICE LINES TWO (2) INCHES IN DIAMETER AND SMALLER SHALL BE TYPE K COPPER TUBING. CORPORATION STOPS SHALL BE MUELLER H-15020 FOR 3/4 AND 1 INCH, MUELLER H-15000 OR B-25000 FOR 1 1/2 AND 2 INCH SIZES. CURB VALVES SHALL BE MUELLER H-1502-2 FOR 3/4 AND 1 INCH AND MUELLER B-25204 FOR 1 1/2 AND 2 INCH SIZES. CURB BOXES SHALL BE MUELLER H-10314 FOR 3/4 AND 1 INCH AND MUELLER H-10310 FOR 1 1/2 AND 2 INCH SIZES.
8. ALL PIPE INSTALLATION SHALL BE SUBJECT TO INSPECTION BY THE T.O.N. WATER DEPARTMENT. THE CONTRACTOR SHALL BE RESPONSIBLE FOR COORDINATING ALL INSPECTIONS AS REQUIRED WITH THE T.O.N. WATER DEPARTMENT.
9. THE WATER MAIN SHALL BE TESTED, DISINFECTED AND FLUSHED IN ACCORDANCE WITH THE T.O.N. REQUIREMENTS. ALL TESTING, DISINFECT ION AND FLUSHING SHALL BE COORDINATED WITH THE T.O.N. WATER DEPARTMENT. PRIOR TO PUTTING THE WATER MAIN IN SERVICE SATISFACTORY SANITARY RESULTS FROM A CERTIFIED LAB MUST BE SUBMITTED TO THE T.O.N. WATER DEPARTMENT. THE TEST SAMPLES MUST BE COLLECTED BY A REPRESENTATIVE OF THE TESTING LABORATORY AND WITNESSED BY THE WATER DEPARTMENT.

THIS SHEET IS INVALID AND VOID UNLESS ACCOMPANIED BY REMAINING SHEETS IN SET.

TALCOTT ENGINEERING DESIGN PLLC
1 GARDNERTOWN ROAD
NEWBURGH, N.Y. 12550
(845)-569-8400
(FAX)(845)-569-4583
TALCOTTDESIGN12@GMAIL.COM

ENGINEER

CHARLES T. BROWN, P.E.
P.O BOX 4470
NEW WINDSOR, N.Y. 12553

DETAIL SHEET FOR:
CARLOS DOMINGUES
NEW ROAD, S/B/L: 39-1-14
TOWN OF NEWBURGH, ORANGE COUNTY, NY

DATE	SCALE	JOB NUMBER	SHEET NUMBER
12/23/11	AS NOTED	11114-CDS	3 OF 3