TOWN OF NEWBURGH
PLANNING BOARD
TECHNICAL REVIEW COMMENTS

PROJECT NAME:	**GARDNER RIDGE**
PROJECT NO.:	**02-29**
PROJECT LOCATION:	**GARDNERTOWN ROAD NEAR GIDNEY AVENUE** **SECTION 75, BLOCK 1, LOT 4.12**
REVIEW DATE:	**9 OCTOBER 2024**
MEETING DATE:	**17 OCTOBER 2024**
PROJECT REPRESENTATIVE:	**ENGINEERING & LAND PLANNING - THOMAS B. OLLEY, P.E. / DARREN DOCE**

1. The applicant is before the Board for ARB review and approval.

Respectfully submitted,

MHE Engineering, D.P.C.

Patrick J. Hines
Principal

Michael W. Weeks, P.E.
Principal

PJH/kmm

NEW YORK OFFICE
33 Airport Center Drive, Suite 202, New Windsor, NY 12553
845-567-3100 | F: 845-567-3232 | mheny@mhepc.com

PENNSYLVANIA OFFICE
111 Wheatfield Drive, Suite 1, Milford, PA 18337
570-296-2765 | F: 570-296-2767 | mhepa@mhepc.com

Gardner Ridge Apartments

NS GARDNERTOWN ROAD,
NEWBURGH, NEW YORK 12550

ARB FILING SET - 10.01.2024

OWNER:
GARDNER RIDGE ASSOCIATES LLC
134 FAIRVIEW ROAD
ROCKAWAY, NEW JERSEY 08766

ARCHITECT:
FIFTH STREET ARCHITECTURE, PLLC
109 S. WILLIAM STREET, UNIT 1J
NEWBURGH, NEW YORK 12550

DRAWING LIST

NO.	TITLE	SCALE	10/01/2024		
G-000.00	COVER SHEET	N/A	X		
A-300.00	BUILDING ELEVATIONS (BLDGS 1-3)	1/8" = 1'-0"	X		
A-301.00	BUILDING ELEVATIONS (BLDGS 4-5)	1/8" = 1'-0"	X		
A-302.00	BUILDING ELEVATIONS (SENIOR HOUSING BLDG)	1/8" = 1'-0"	X		
A-303.00	BUILDING ELEVATIONS (REC.CENTER BLDG)	1/4" = 1'-0"	X		
A-400.00	TYP. WINDOW DETAILS & NOTES	VARIES	X		
A-410.00	ENTRY DOOR DETAILS & NOTES (BLDGS 1-5)	VARIES	X		
A-411.00	ENTRY DOOR DETAILS & NOTES (SENIOR HOUSING BLDG)	VARIES	X		
A-412.00	ENTRY DOOR DETAILS & NOTES (REC. CENTER BLDG)	VARIES	X		
A-900.00	EXTERIOR MONUMENTAL SIGNAGE PLAN & NOTES	VARIES	X		
APPX-000.00	EXTERIOR RENDERINGS	N/A	X		
APPX-001.00	EXTERIOR RENDERINGS	N/A	X		

SITE DIAGRAM

SCALE = 1:100

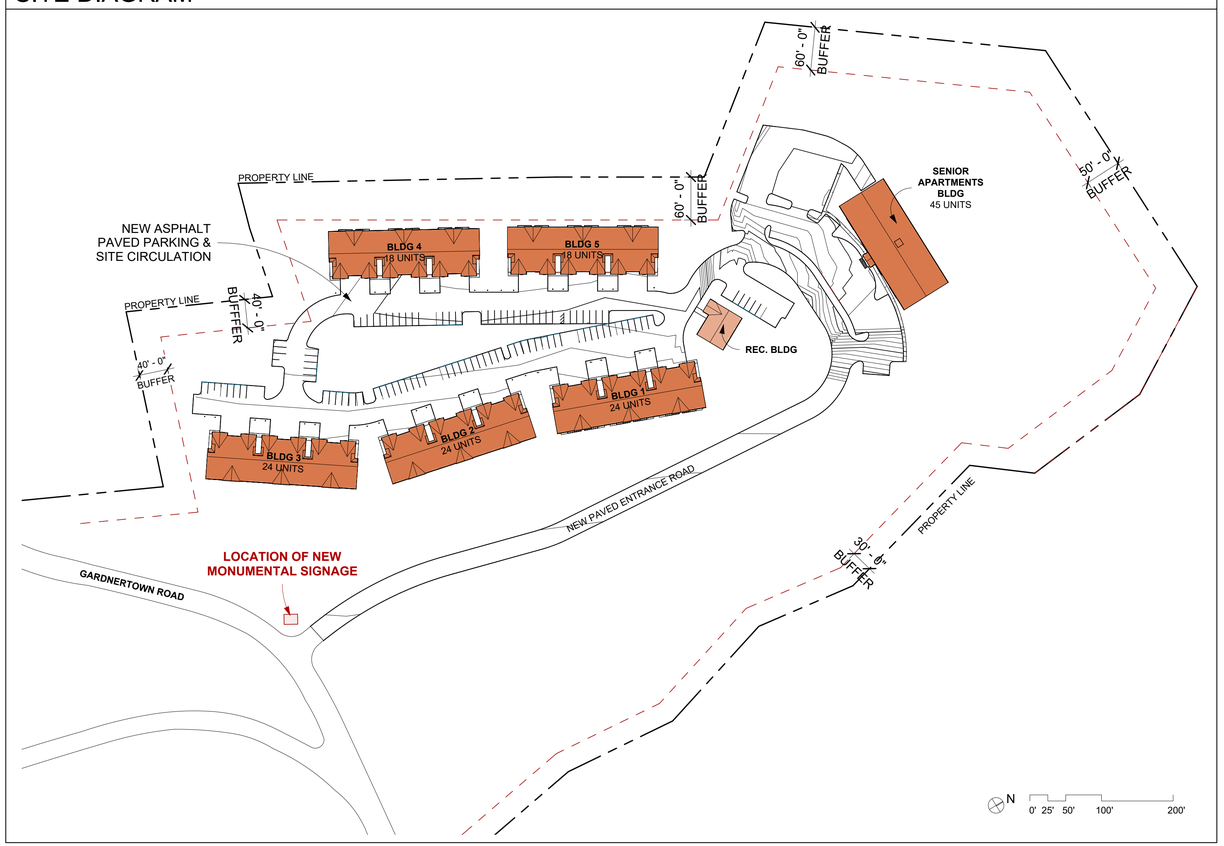

TAX MAP

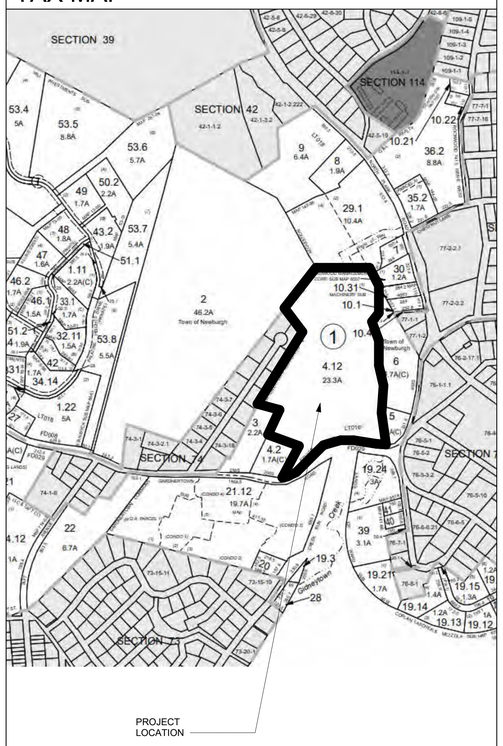

ZONING MAP

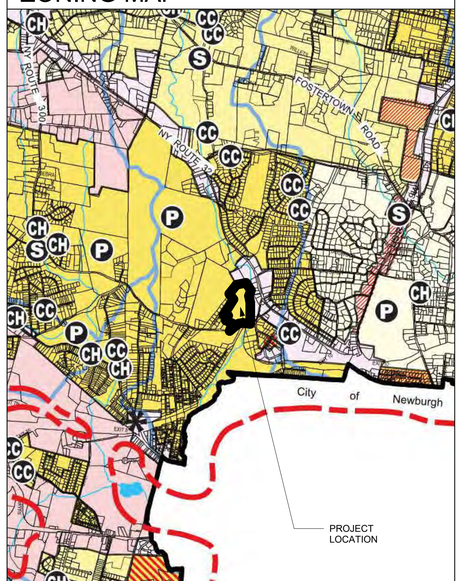

PROJECT DESCRIPTION:

LOCATION:	NS GARDNERTOWN RD, NEWBURGH, NY 12550
TAX MAP:	SECTION: 75, BLOCK: 1, LOT: 4.12
LOT AREA:	23.27 Ac. = 1013641.20 SF
ZONING DISTRICT:	R3 - RESIDENTIAL
EXISTING USE:	VACANT LOT
PROPOSED USE:	R2-RESIDENTIAL

FIFTH STREET ARCHITECTURE, PLLC
109 S. WILLIAM STREET, UNIT 1J
NEWBURGH, NY 12550
T: 845 273 6701
INFO@5THSTREETARCH.COM

c 2024 Fifth Street Architecture, PLLC

No.	Date	Description
	10.01.2024	ARB Filing Set

THESE CAD FILES MAY NOT BE USED, DUPLICATED, MODIFIED OR CHANGED IN ANY MANNER WITHOUT THE WRITTEN CONSENT OF FIFTH STREET ARCHITECTURE PLLC. THE USER AND ITS AGENTS WILL BE LIABLE FOR ANY UNAUTHORIZED USE, DUPLICATION, MODIFICATION OR CHANGE.

Gardner Ridge
NEWBURGH, NEW YORK 12550

PROJECT NORTH

DRAWING TITLE
ARB Cover Sheet

DRAWING NO.
G-000.00

SEAL & SIGNATURE

DATE:	10.01.2024
SCALE:	1" = 100'-0"
DWG BY:	Author
CHK BY:	Checker

EXTERIOR FINISH SCHEDULE

TAG	MATERIAL	SIZE	COLOR	NOTES
G1	HORIZONTAL VINYL SIDING BY CERTAINTEED (OR APPROVED EQUAL)	TBD	GRAYSTONE (61)	SUBMIT SAMPLES FOR APPROVAL PRIOR TO ORDERING
G2	VERTICAL VINYL SIDING BY CERTAINTEED (OR APPROVED EQUAL)	TBD	COLONIAL WHITE (01)	SUBMIT SAMPLES FOR APPROVAL PRIOR TO ORDERING
G3	HORIZONTAL VINYL SIDING BY CERTAINTEED (OR APPROVED EQUAL)	TBD	COLONIAL WHITE (01)	SUBMIT SAMPLES FOR APPROVAL PRIOR TO ORDERING
G4	PVC OR VINYL CLAPBOARD SIDING W/ WOOD-LIKE TEXTURE BY CERTAINTEED (OR APPROVED EQUAL)	TBD	FRONTIER BLEND	SUBMIT SAMPLES FOR APPROVAL PRIOR TO ORDERING
G5	PVC OR VINYL CLAPBOARD SIDING W/ WOOD-LIKE TEXTURE BY CERTAINTEED (OR APPROVED EQUAL)	TBD	CEDAR BLEND	SUBMIT SAMPLES FOR APPROVAL PRIOR TO ORDERING
G6	TIMBERLINE HDZ ARCHITECTURAL SHINGLES BY GAF (OR APPROVED EQUAL)	TBD	OYSTER GRAY	SUBMIT SAMPLES FOR APPROVAL PRIOR TO ORDERING
G7	FLAT STOCK PANEL & TRIM BY AZEK (OR APPROVED EQUAL)	TBD	WHITE (MATCH WINDOWS)	SUBMIT SAMPLES FOR APPROVAL PRIOR TO ORDERING

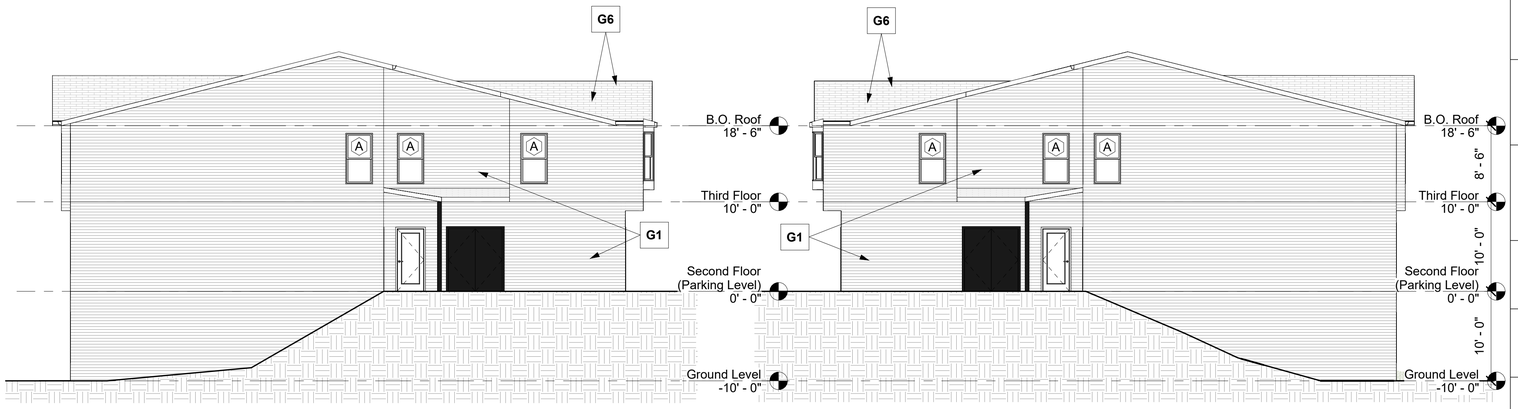

North Elevation (1-3) 4
1/8" = 1'-0"

South Elevation (1-3) 3
1/8" = 1'-0"

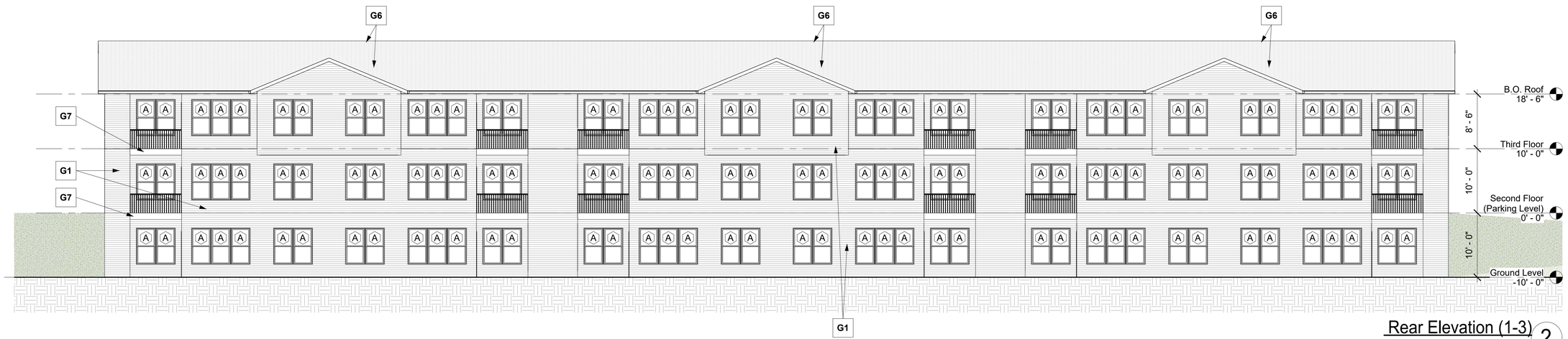

Rear Elevation (1-3) 2
1/8" = 1'-0"

Front Elevation (1-3) 1
1/8" = 1'-0"

FIFTH STREET ARCHITECTURE, PLLC
109 S. WILLIAM STREET, UNIT 1J
NEWBURGH, NY 12550
T: 845 273 6701
INFO@5THSTREETARCH.COM

c 2024 Fifth Street Architecture, PLLC

No.	Date	Description
	10.01.2024	ARB Filing Set

THESE CAD FILES MAY NOT BE USED, DUPLICATED, MODIFIED OR CHANGED IN ANY MANNER WITHOUT THE WRITTEN CONSENT OF FIFTH STREET ARCHITECTURE PLLC. THE USER AND ITS AGENTS WILL BE LIABLE FOR ANY UNAUTHORIZED USE, DUPLICATION, MODIFICATION OR CHANGE.

Gardner Ridge

NEWBURGH, NEW YORK 12550

PROJECT NORTH

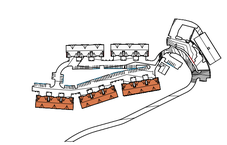

DRAWING TITLE

Building Elevations - Typ. Elevations for Bldgs 1-3

DRAWING NO.

A-300.00

SEAL & SIGNATURE

DATE:	10.01.2024
SCALE:	As indicated
DWG BY:	Author
CHK BY:	Checker

WINDOW SCHEDULE

MARK	MANUFACTURER	SERIES	TYPE	ROUGH OPENING WIDTH	ROUGH OPENING HEIGHT	SILL HEIGHT	COLOR	INTERIOR CASING	U-FACTOR	COMMENTS
A	ANDERSEN	A SERIES (VINYL CLAD)	DOUBLE HUNG	3'-0"	5'-8"	2'-0"	EXT: WHITE INT: WHITE		0.25 - 0.30	
B	ANDERSEN	A SERIES (VINYL CLAD)	DOUBLE HUNG	3'-2"	5'-0"	2'-0"	EXT: WHITE INT: WHITE		0.25 - 0.30	4 OVER 1 AT FRONT ELEVATION, 1 OVER 1 ALL OTHER ELEVATIONS SILL HT. 3'-0" AT REC. CENTER BUILDING
C	ANDERSEN	400 SERIES (ALUM CLAD)	BAY (FIXED W/ DOUBLE HUNG)	7'-9 7/8" +/-	5'-6 3/4" +/-	2'-0"	EXT: WHITE INT: WHITE		0.25 - 0.30	COORDINATE W/ WINDOW MANUF. FOR FINAL SIZING - ARRANGEMENT TO BE ONE FIXED PICTURE WINDOW AT CENTER W/ OPERABLE DOUBLE HUNG AT EITHER FLANK

WINDOW NOTES

1. CONTRACTOR TO TAPE AND SEAL ALL WINDOWS/FLANGES AND BLOCKING
2. CONTRACTOR TO PROVIDE ALL NECESSARY TRIM & MOULDING ('AZEK' OR EQUAL) TO TRIM OUT OPENINGS

NOTE: PRIOR TO ORDERING, CONTRACTOR TO VERIFY ROUGH OPENING SIZES & REPORT ANY DEIVIATION TO THE OWNER OR ARCHITECT. ALL WINDOWS SHALL MEET THE MIN. U-FACTOR OF 0.32 OR BETTER

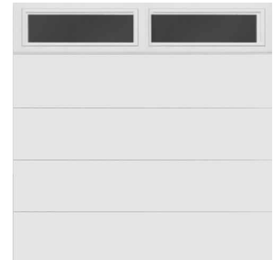

OVERHEAD DOOR - TYP. BLDGS 1-5
8'X8' MODEL 8300 BY WAYNE-DALTON (OR APPROVED EQUAL) CONTEMPORARY W/ CLEAR IV STYLE GLAZING - COLOR WHITE

South Elevation (4-5) 4
1/8" = 1'-0"

North Elevation (4-5) 3
1/8" = 1'-0"

Rear Elevation (4-5) 2
1/8" = 1'-0"

Front Elevation (4-5) 1
1/8" = 1'-0"

FIFTH STREET ARCHITECTURE, PLLC
109 S. WILLIAM STREET, UNIT 1J
NEWBURGH, NY 12550
T: 845 273 6701
INFO@5THSTREETARCH.COM

c 2024 Fifth Street Architecture, PLLC

No.	Date	Description
	10.01.2024	ARB Filing Set

THESE CAD FILES MAY NOT BE USED, DUPLICATED, MODIFIED OR CHANGED IN ANY MANNER WITHOUT THE WRITTEN CONSENT OF FIFTH STREET ARCHITECTURE PLLC. THE USER AND ITS AGENTS WILL BE LIABLE FOR ANY UNAUTHORIZED USE, DUPLICATION, MODIFICATION OR CHANGE.

Gardner Ridge
NEWBURGH, NEW YORK 12550

PROJECT NORTH

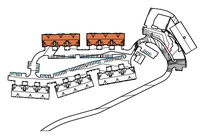

DRAWING TITLE
Building Elevations - Typ. Elevations for Bldgs 4-5

DRAWING NO.
A-301.00

SEAL & SIGNATURE

DATE:	10.01.2024
SCALE:	As indicated
DWG BY:	Author
CHK BY:	Checker

Seniors Housing West Elevation 4
1/8" = 1'-0"

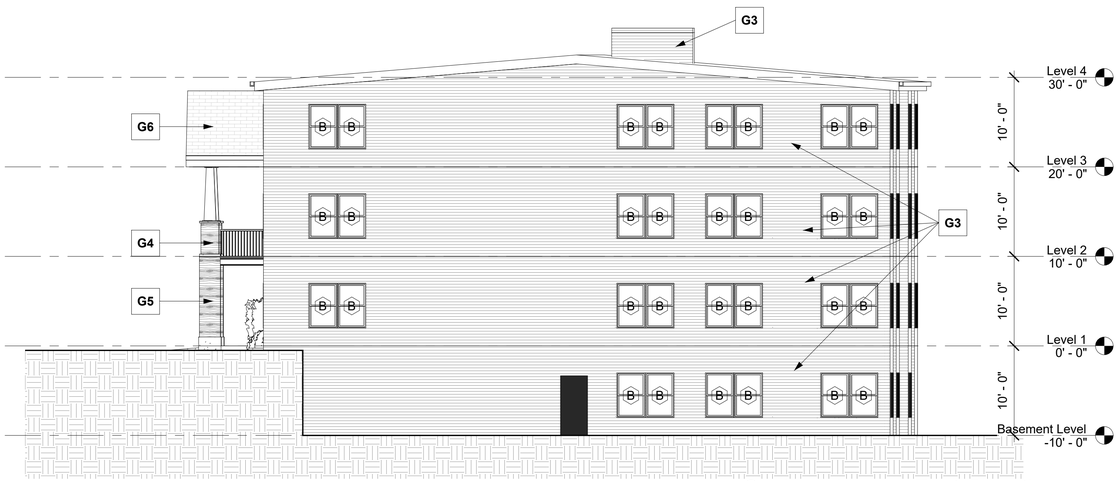

Seniors Housing East Elevation 3
1/8" = 1'-0"

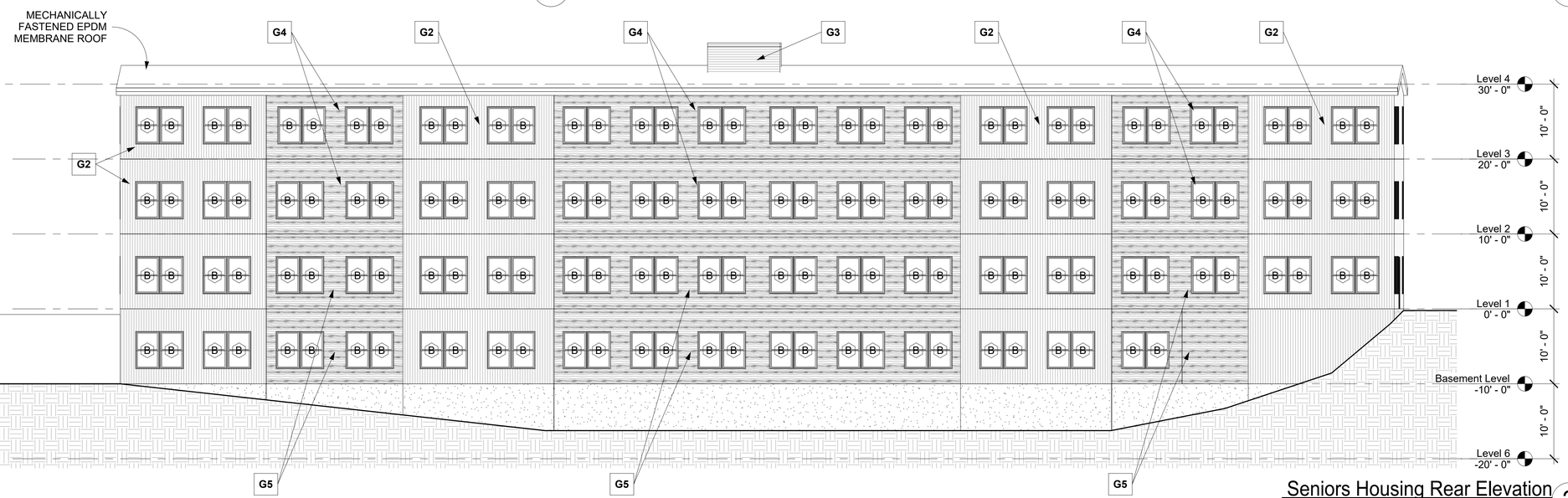

Seniors Housing Rear Elevation 2
1/8" = 1'-0"

Seniors Housing Front Elevation 1
1/8" = 1'-0"

FIFTH STREET ARCHITECTURE, PLLC
109 S. WILLIAM STREET, UNIT 1J
NEWBURGH, NY 12550
T: 845 273 6701
INFO@5THSTREETARCH.COM

c 2024 Fifth Street Architecture, PLLC

No.	Date	Description
	10.01.2024	ARB Filing Set

THESE CAD FILES MAY NOT BE USED, DUPLICATED, MODIFIED OR CHANGED IN ANY MANNER WITHOUT THE WRITTEN CONSENT OF FIFTH STREET ARCHITECTURE PLLC. THE USER AND ITS AGENTS WILL BE LIABLE FOR ANY UNAUTHORIZED USE, DUPLICATION, MODIFICATION OR CHANGE.

Gardner Ridge

NEWBURGH, NEW YORK 12550

PROJECT NORTH

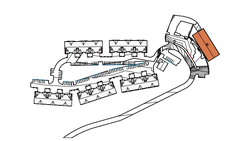

DRAWING TITLE

Building Elevations - Senior Housing Building

DRAWING NO.

A-302.00

SEAL & SIGNATURE

DATE:	10.01.2024
SCALE:	As indicated
DWG BY:	Author
CHK BY:	Checker

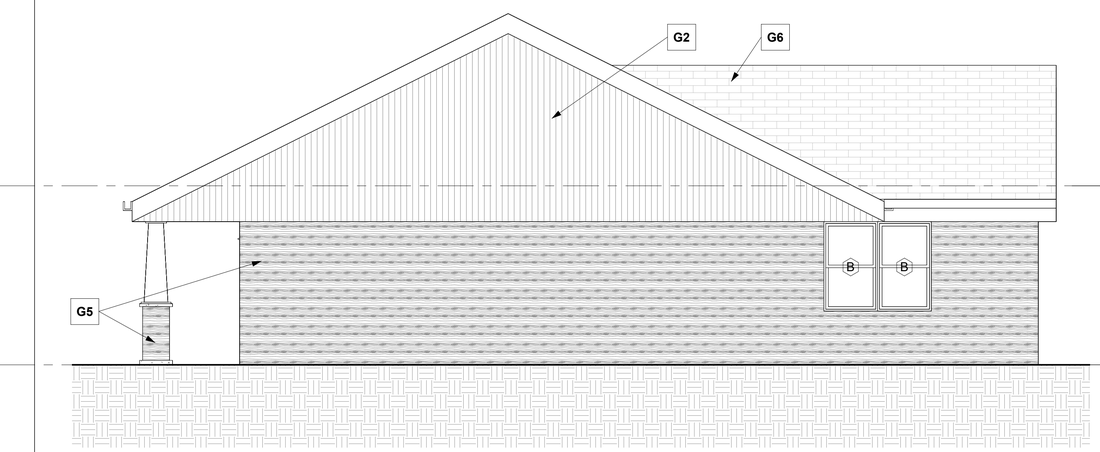

Rec. Bldg North Elevation 4
1/4" = 1'-0"

Rec. Bldg Rear Elevation 2
1/4" = 1'-0"

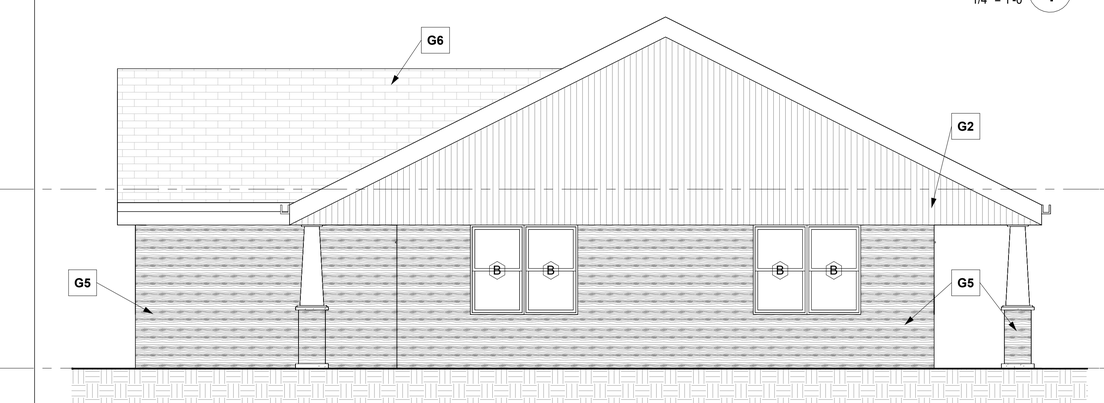

Rec. Bldg South Elevation 3
1/4" = 1'-0"

Rec. Bldg Front Elevation 1
1/4" = 1'-0"

FIFTH STREET ARCHITECTURE, PLLC
109 S. WILLIAM STREET, UNIT 1J
NEWBURGH, NY 12550
T: 845 273 6701
INFO@5THSTREETARCH.COM

No.	Date	Description
	10.01.2024	ARB Filing Set

THESE CAD FILES MAY NOT BE USED, DUPLICATED, MODIFIED OR CHANGED IN ANY MANNER WITHOUT THE WRITTEN CONSENT OF FIFTH STREET ARCHITECTURE PLLC. THE USER AND ITS AGENTS WILL BE LIABLE FOR ANY UNAUTHORIZED USE, DUPLICATION, MODIFICATION OR CHANGE.

Gardner Ridge

NEWBURGH, NEW YORK 12550

PROJECT NORTH

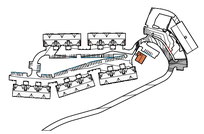

DRAWING TITLE

Building Elevations - Rec. Center Building

DRAWING NO.

A-303.00

SEAL & SIGNATURE

DATE:	10.01.2024
SCALE:	As indicated
DWG BY:	Author
CHK BY:	Checker

c 2024 Fifth Street Architecture, PLLC

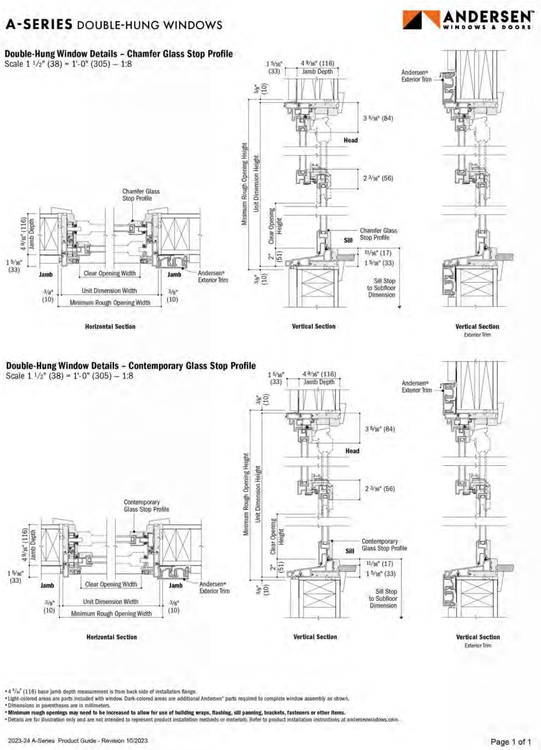

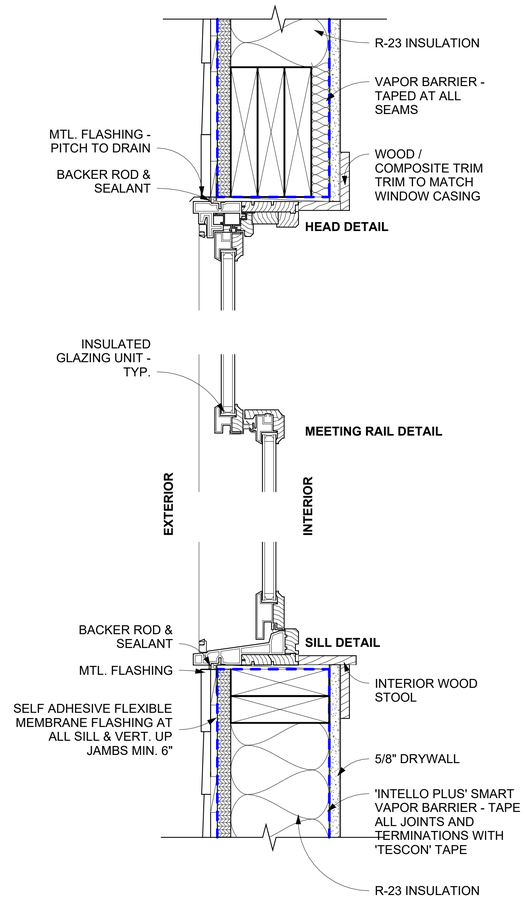

Typ. Dbl Hung Window Section Detail 4
3" = 1'-0"

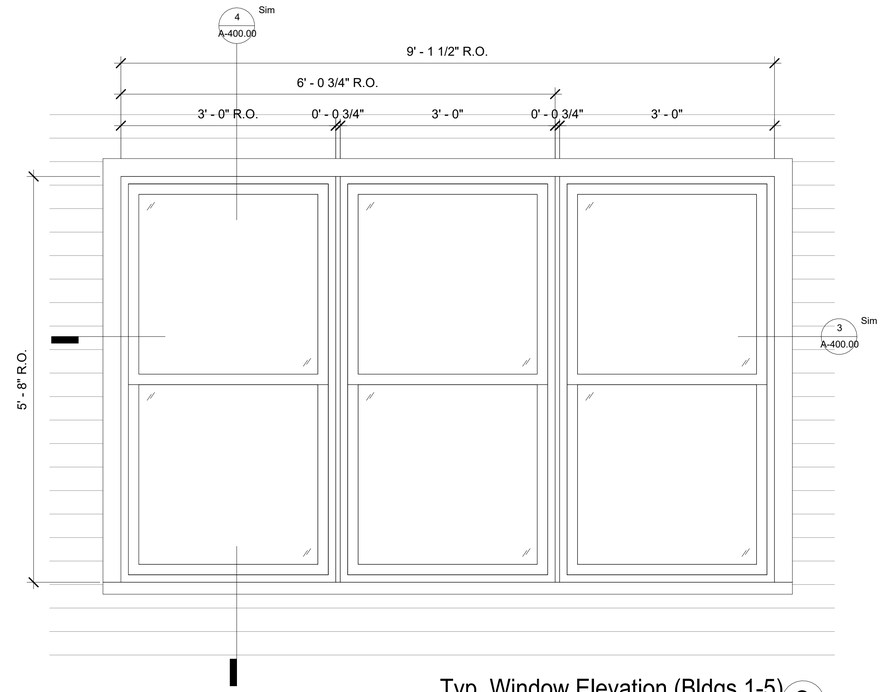

Typ. Window Elevation (Bldgs 1-5) 2
1" = 1'-0"

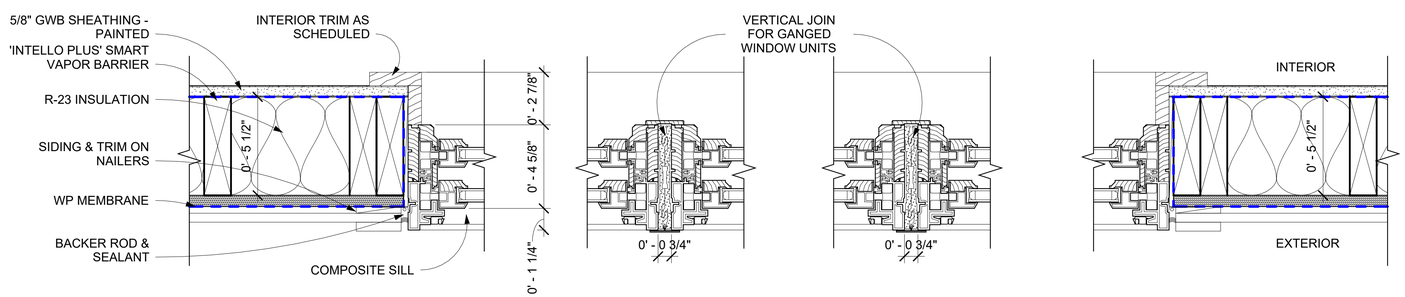

Typ. Dbl Hung Window Plan Detail 3
3" = 1'-0"

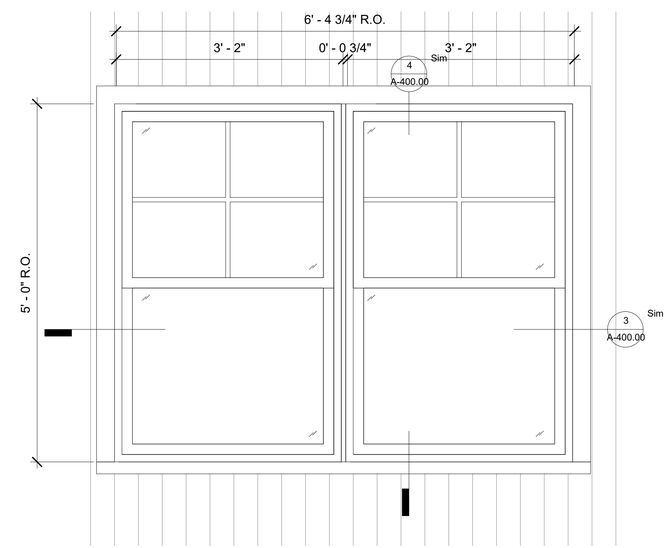

NOTE: 4 OVER 1 FOR FRONT ELEVATION,
1 OVER 1 FOR ALL OTHER ELEVATIONS

Typ. Window Elevation (Senior & Rec. Bldgs) 1
1" = 1'-0"

FIFTH STREET ARCHITECTURE, PLLC
109 S. WILLIAM STREET, UNIT 1J
NEWBURGH, NY 12550
T: 845 273 6701
INFO@5THSTREETARCH.COM

c 2024 Fifth Street Architecture, PLLC

No.	Date	Description
	10.01.2024	ARB Filing Set

THESE CAD FILES MAY NOT BE USED, DUPLICATED, MODIFIED OR CHANGED IN ANY MANNER WITHOUT THE WRITTEN CONSENT OF FIFTH STREET ARCHITECTURE PLLC. THE USER AND ITS AGENTS WILL BE LIABLE FOR ANY UNAUTHORIZED USE, DUPLICATION, MODIFICATION OR CHANGE.

Gardner Ridge
NEWBURGH, NEW YORK 12550

PROJECT NORTH

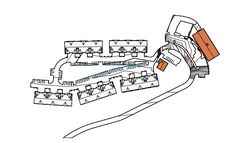

DRAWING TITLE
Window Details & Notes

DRAWING NO.
A-400.00

SEAL & SIGNATURE

DATE:	10.01.2024
SCALE:	As indicated
DWG BY:	Author
CHK BY:	Checker

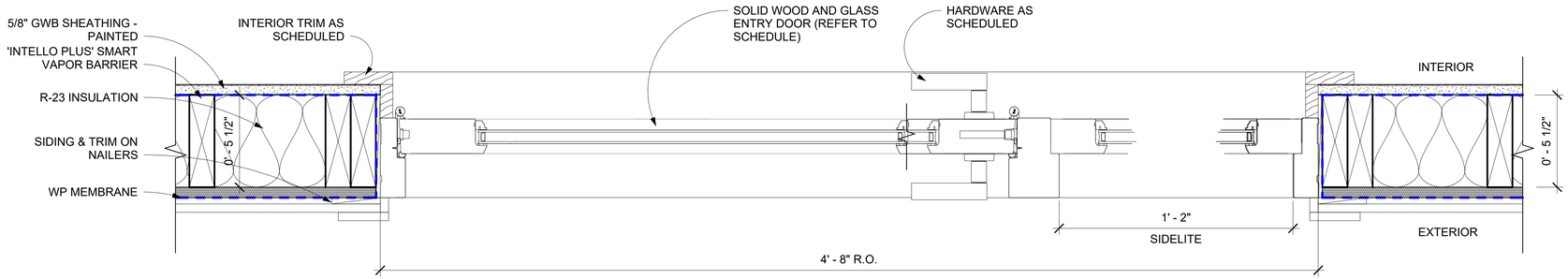

Typ. Entry Door Plan 2
3" = 1'-0"

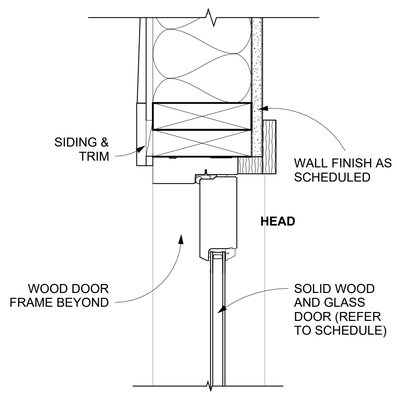

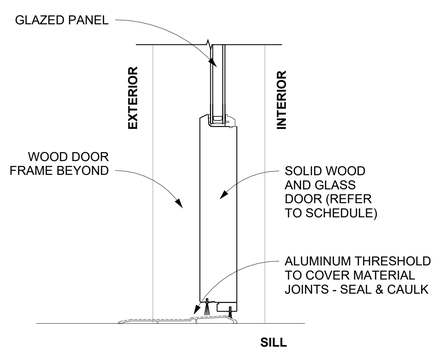

Typ. Entry Door Section 3
3" = 1'-0"

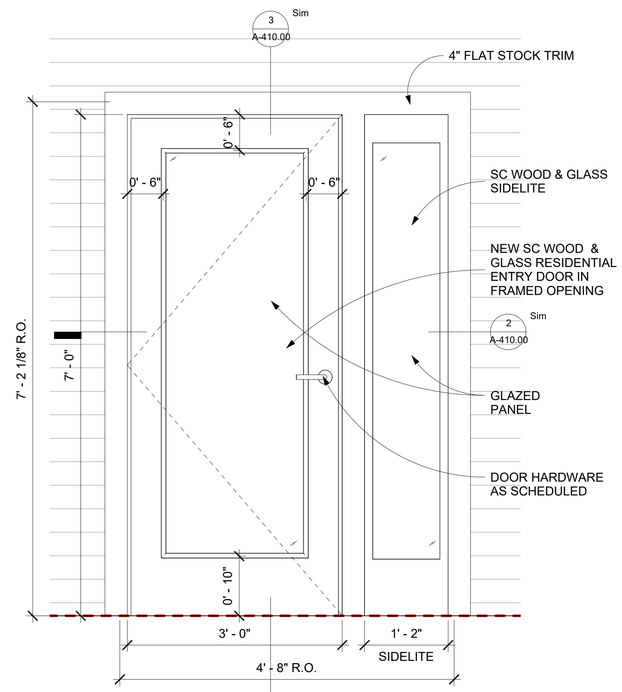

Typ. Entry Door Elevation 1
1" = 1'-0"

FIFTH STREET ARCHITECTURE, PLLC
109 S. WILLIAM STREET, UNIT 1J
NEWBURGH, NY 12550
T: 845 273 6701
INFO@5THSTREETARCH.COM

c 2024 Fifth Street Architecture, PLLC

No.	Date	Description
	10.01.2024	ARB Filing Set

THESE CAD FILES MAY NOT BE USED, DUPLICATED, MODIFIED OR CHANGED IN ANY MANNER WITHOUT THE WRITTEN CONSENT OF FIFTH STREET ARCHITECTURE PLLC. THE USER AND ITS AGENTS WILL BE LIABLE FOR ANY UNAUTHORIZED USE, DUPLICATION, MODIFICATION OR CHANGE.

Gardner Ridge

NEWBURGH, NEW YORK 12550

PROJECT NORTH

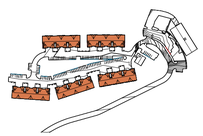

DRAWING TITLE

Entry Door Details & Notes - Bldgs 1-5

DRAWING NO.

A-410.00

SEAL & SIGNATURE

DATE:	10.01.2024
SCALE:	As Indicated
DWG BY:	Author
CHK BY:	Checker

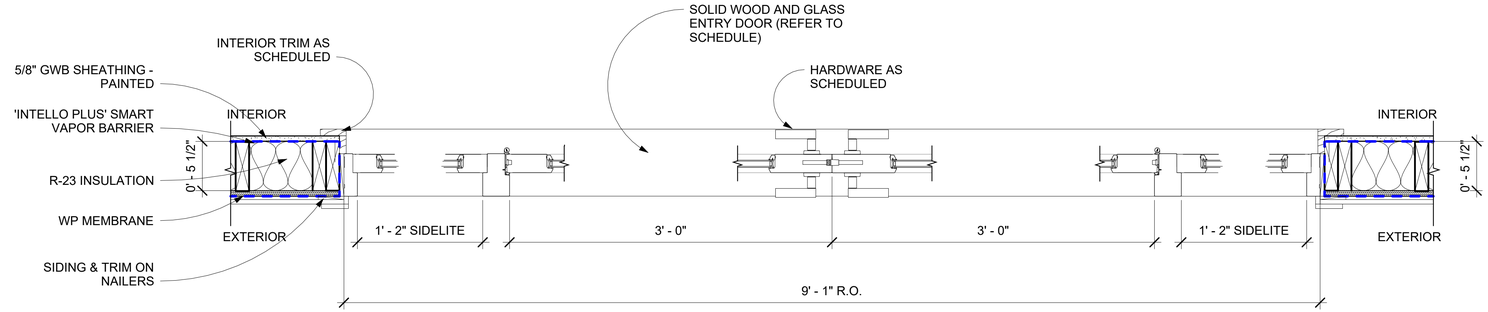

Typ. Entry Door Plan (Senior Housing) 2

1 1/2" = 1'-0"

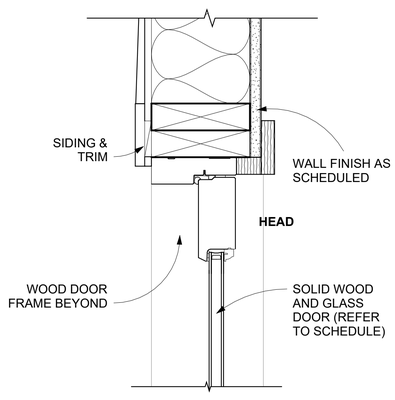

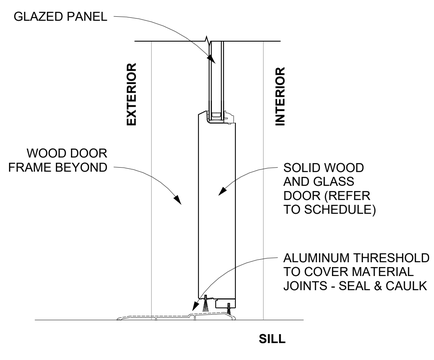

Typ. Entry Door Section 3

3" = 1'-0"

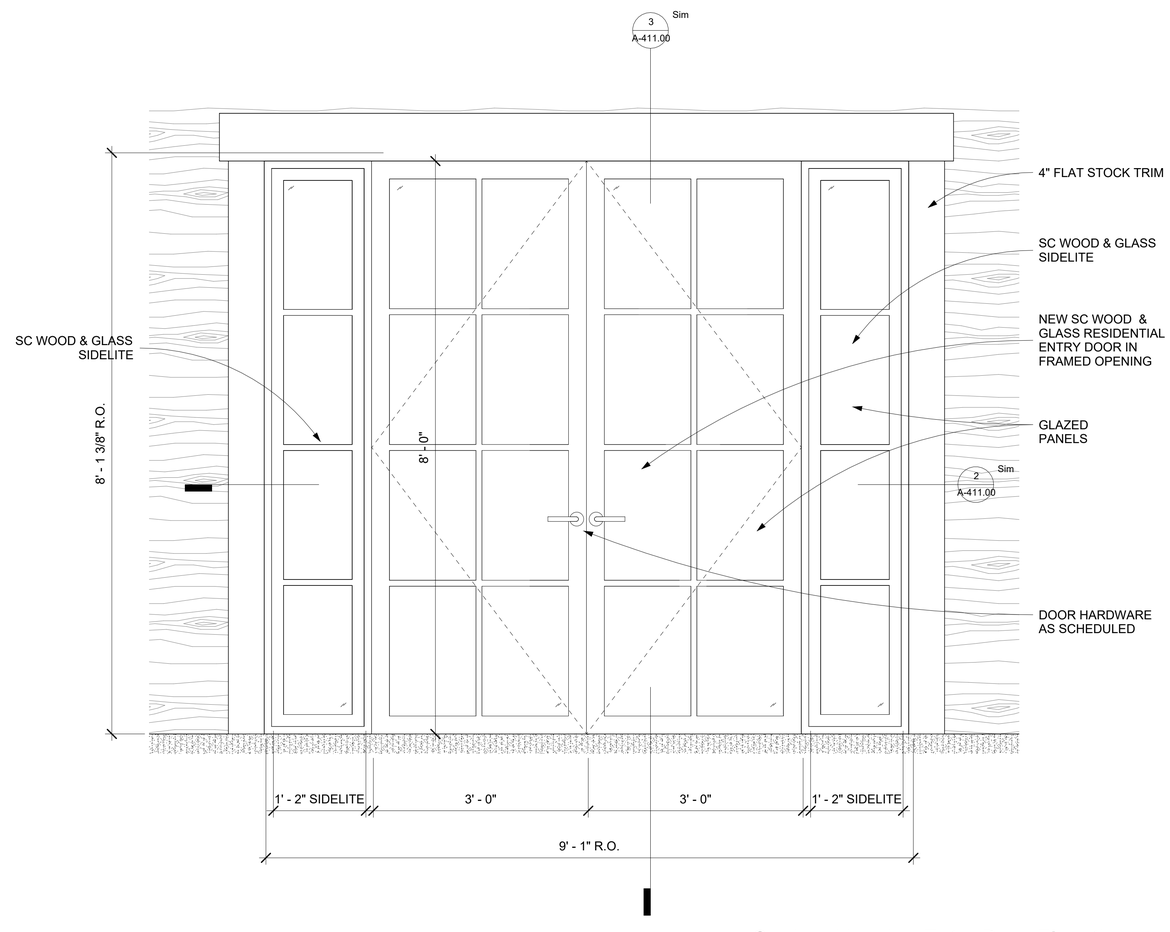

Seniors Housing Entry Door Elevation 1

1" = 1'-0"

FIFTH STREET ARCHITECTURE, PLLC
109 S. WILLIAM STREET, UNIT 1J
NEWBURGH, NY 12550
T: 845 273 6701
INFO@5THSTREETARCH.COM

c 2024 Fifth Street Architecture, PLLC

No.	Date	Description
	10.01.2024	ARB Filing Set

THESE CAD FILES MAY NOT BE USED, DUPLICATED, MODIFIED OR CHANGED IN ANY MANNER WITHOUT THE WRITTEN CONSENT OF FIFTH STREET ARCHITECTURE PLLC. THE USER AND ITS AGENTS WILL BE LIABLE FOR ANY UNAUTHORIZED USE, DUPLICATION, MODIFICATION OR CHANGE.

Gardner Ridge

NEWBURGH, NEW YORK 12550

PROJECT NORTH

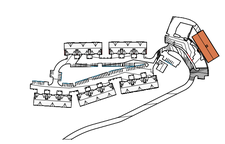

DRAWING TITLE

Entry Door Details & Notes - Senior Housing Bldg

DRAWING NO.

A-411.00

SEAL & SIGNATURE

DATE:	10.01.2024
SCALE:	As indicated
DWG BY:	Author
CHK BY:	Checker

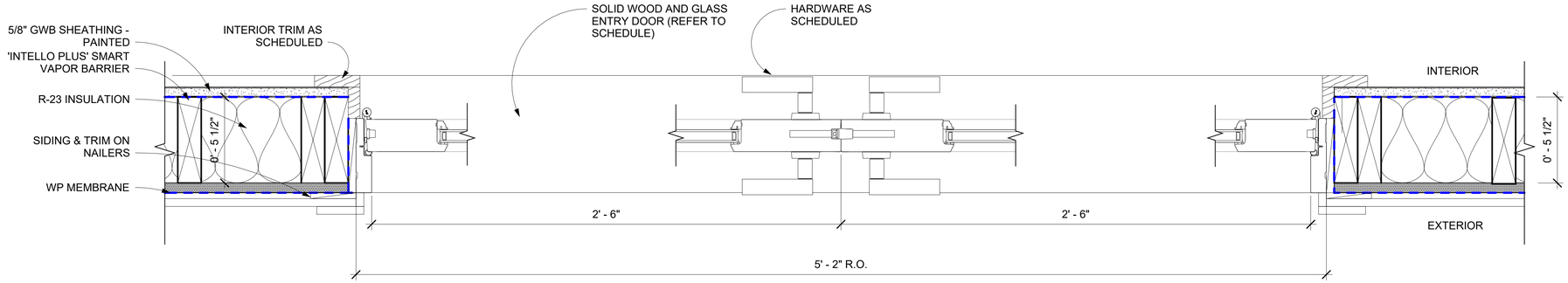

Typ. Entry Door Plan (Rec. Center) 2
3" = 1'-0"

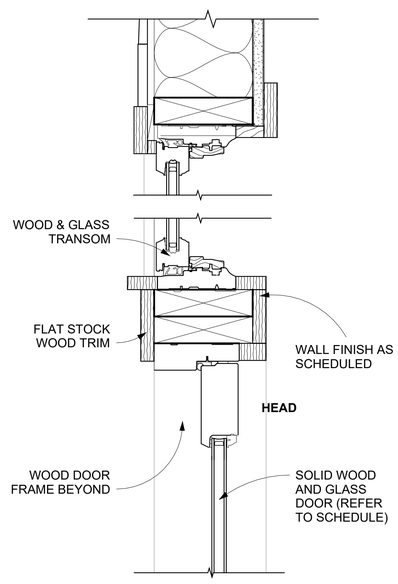

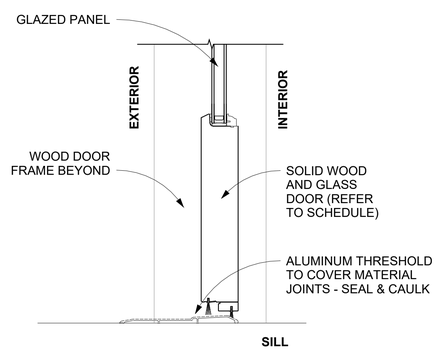

Typ. Entry Door Section 3
3" = 1'-0"

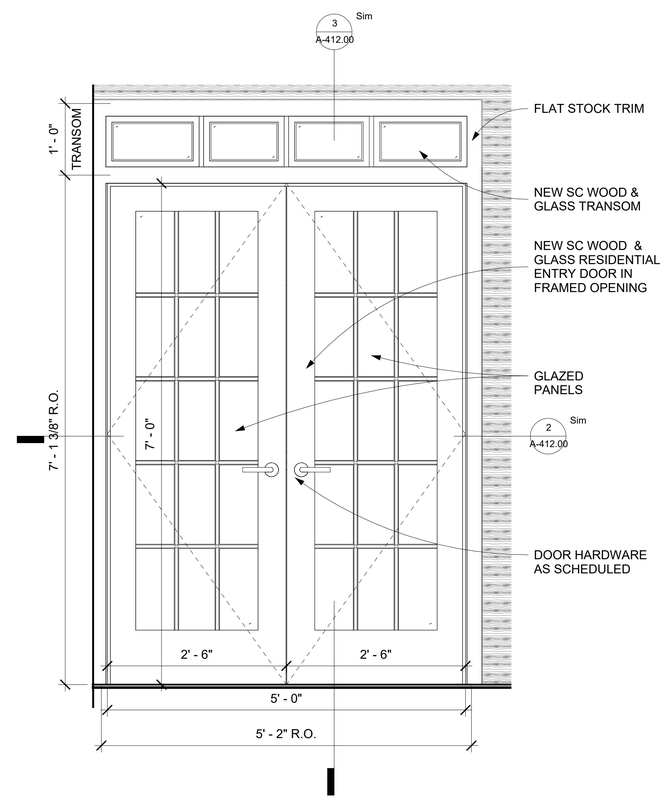

Rec. Center Entry Door Elevation 1
1" = 1'-0"

FIFTH STREET ARCHITECTURE, PLLC
109 S. WILLIAM STREET, UNIT 1J
NEWBURGH, NY 12550
T: 845 273 6701
INFO@5THSTREETARCH.COM

c 2024 Fifth Street Architecture, PLLC

No.	Date	Description
	10.01.2024	ARB Filing Set

THESE CAD FILES MAY NOT BE USED, DUPLICATED, MODIFIED OR CHANGED IN ANY MANNER WITHOUT THE WRITTEN CONSENT OF FIFTH STREET ARCHITECTURE PLLC. THE USER AND ITS AGENTS WILL BE LIABLE FOR ANY UNAUTHORIZED USE, DUPLICATION, MODIFICATION OR CHANGE.

Gardner Ridge
NEWBURGH, NEW YORK 12550

PROJECT NORTH

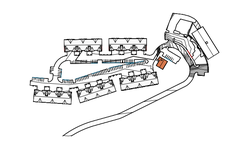

DRAWING TITLE
Entry Door Details & Notes - Rec. Center

DRAWING NO.
A-412.00

SEAL & SIGNATURE

DATE:	10.01.2024
SCALE:	As indicated
DWG BY:	Author
CHK BY:	Checker

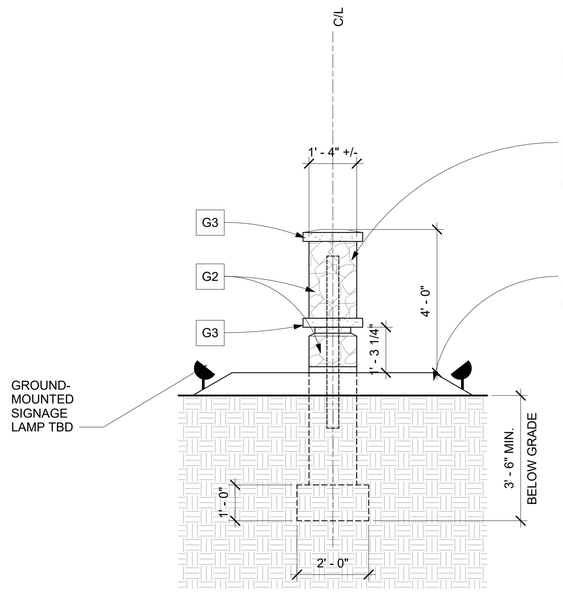

PLAN VIEW

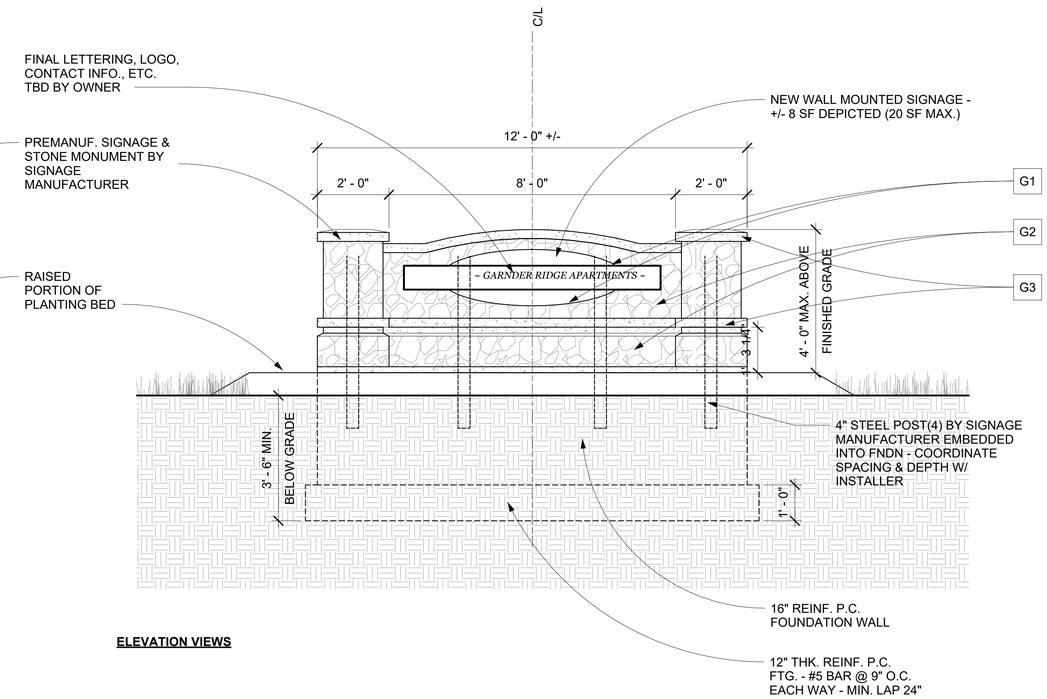

ELEVATION VIEWS

MATERIALS SCHEDULE

TAG	MATERIAL	SIZE	COLOR	NOTES
G1	METAL PANEL BY WESTERN STATES METAL ROOFING (OR APPROVED EQUAL)	TBD	CLASSIC GREEN (OR APPROVED EQUAL)	SUBMIT SAMPLES FOR APPROVAL PRIOR TO ORDERING
G2	FIELDSTONE VENEER BY "FIELDSTONE VENEER INC." OR APPROVED EQUAL	TBD	CONETTICUT TAN MOSAIC (OR APPROVED EQUAL)	SUBMIT SAMPLES FOR APPROVAL PRIOR TO ORDERING
G3	CAP STONE BY "FIELDSTONE VENEER INC." OR APPROVED EQUAL	TBD	GRAY (OR APPROVED EQUAL)	SUBMIT SAMPLES FOR APPROVAL PRIOR TO ORDERING

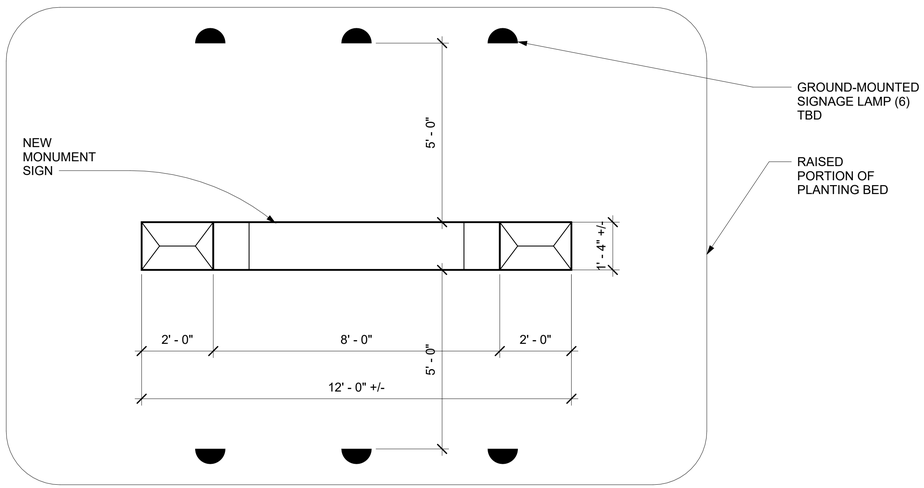

PLAN VIEW

Monumental Signage Plan & Elevations

1/2" = 1'-0" 1

FIFTH STREET ARCHITECTURE, PLLC
109 S. WILLIAM STREET, UNIT 1J
NEWBURGH, NY 12550
T: 845 273 6701
INFO@5THSTREETARCH.COM

c 2024 Fifth Street Architecture, PLLC

No.	Date	Description
	10.01.2024	ARB Filing Set

THESE CAD FILES MAY NOT BE USED, DUPLICATED, MODIFIED OR CHANGED IN ANY MANNER WITHOUT THE WRITTEN CONSENT OF FIFTH STREET ARCHITECTURE PLLC. THE USER AND ITS AGENTS WILL BE LIABLE FOR ANY UNAUTHORIZED USE, DUPLICATION, MODIFICATION OR CHANGE.

Gardner Ridge

NEWBURGH, NEW YORK 12550

PROJECT NORTH

DRAWING TITLE

Exterior Monumental Signage Plan & Notes

DRAWING NO.

A-900.00

SEAL & SIGNATURE

DATE:	10.01.2024
SCALE:	1/2" = 1'-0"
DWG BY:	Author
CHK BY:	Checker

View across Parking - Looking Northwest 3
12" = 1'-0"

Rear of Buildings 1 & 2 - Looking Southeast 4
12" = 1'-0"

Front of Building 4 - Looking Northeast 2
12" = 1'-0"

Front of Building 2 - Looking Southwest 1
12" = 1'-0"

FIFTH STREET ARCHITECTURE, PLLC
109 S. WILLIAM STREET, UNIT 1J
NEWBURGH, NY 12550
T: 845 273 6701
INFO@5THSTREETARCH.COM

c 2024 Fifth Street Architecture, PLLC

No.	Date	Description
	10.01.2024	ARB Filing Set

THESE CAD FILES MAY NOT BE USED, DUPLICATED, MODIFIED OR CHANGED IN ANY MANNER WITHOUT THE WRITTEN CONSENT OF FIFTH STREET ARCHITECTURE PLLC. THE USER AND ITS AGENTS WILL BE LIABLE FOR ANY UNAUTHORIZED USE, DUPLICATION, MODIFICATION OR CHANGE.

Gardner Ridge

NEWBURGH, NEW YORK 12550

PROJECT NORTH

DRAWING TITLE

Exterior Renderings

DRAWING NO.

APPX-000.00

SEAL & SIGNATURE

DATE:	10.01.2024
SCALE:	12" = 1'-0"
DWG BY:	Author
CHK BY:	Checker

View from Building 5 (2)
12" = 1'-0"

View from Parking Area (1)
12" = 1'-0"

FIFTH STREET ARCHITECTURE, PLLC
109 S. WILLIAM STREET, UNIT 1J
NEWBURGH, NY 12550
T: 845 273 6701
INFO@5THSTREETARCH.COM

c 2024 Fifth Street Architecture, PLLC

No.	Date	Description
	10.01.2024	ARB Filing Set

THESE CAD FILES MAY NOT BE USED, DUPLICATED, MODIFIED OR CHANGED IN ANY MANNER WITHOUT THE WRITTEN CONSENT OF FIFTH STREET ARCHITECTURE PLLC. THE USER AND ITS AGENTS WILL BE LIABLE FOR ANY UNAUTHORIZED USE, DUPLICATION, MODIFICATION OR CHANGE.

Gardner Ridge

NEWBURGH, NEW YORK 12550

PROJECT NORTH

DRAWING TITLE

Exterior Renderings

DRAWING NO.

APPX-001.00

SEAL & SIGNATURE

DATE:	10.01.2024
SCALE:	12" = 1'-0"
DWG BY:	Author
CHK BY:	Checker