TOWN OF NEWBURGH
PLANNING BOARD
TECHNICAL REVIEW COMMENTS

PROJECT NAME:	**FARRELL INDUSTRIAL PARK AMENDED SITE PLAN**
PROJECT NO.:	**23-9**
PROJECT LOCATION:	**ROUTE 300**
	SECTION 34, BLOCK 2, LOT 45
REVIEW DATE:	**30 JUNE 2023**
MEETING DATE:	**6 JULY 2023**
PROJECT REPRESENTATIVE:	**JMC PLANNING ENGINEERING**

1. The project is before the Board for an amended site plan. The site plan has reduced the size of the proposed structure on the site from 290,000 square feet to 262,080 square feet.

2. Adjoiner's Notices have been recirculated on 22 May 2023.

3. The status of approval for the proposed sub-surface sanitary sewer disposal system should be addressed with the Board. A curtain/trench drain is being installed in order to mitigate ground water conditions encountered in the area of the sub-surface sanitary sewer disposal system. Orange County Department of Health approval for the sub-surface sanitary sewer disposal system is required. It is requested the applicant provide all submissions to Orange County Department of Health copied to the Planning Board.

4. Security and inspection fees for Stormwater Management and Erosion & Sediment Control are required. Cost estimates for this work should be submitted. Town Board approval for the estimates is required.

5. Landscaping security and inspection fees will be required. Cost estimates for landscaping and security should be submitted to Karen Arent's office for review. Town Board approval of the security amount is required.

6. Water main extension with hydrants must be approved by the Orange County Department of Health.

7. In accordance with the Tree Preservation Ordinance limits of disturbance must be delineated on the plan with temporary construction fencing.

8. The revised stormwater plan is under review by this office.

9. A Stormwater Facility Maintenance Agreement must be executed.

10. Signage for the facility should be noted on the plans and included as part of the ARB.

11. NYSDOT approval for access and utilities is required. Status of the NYSDOT review should be addressed with the Planning Board.

12. The Planning Board should determine whether a new Public Hearing should be held based on the reduction in the building size. Previous comments received from residents of Berry Lane regarding access to Berry Lane were received at Public Hearings. Berry Lane remains as a dated emergency access drive on the current plans.

13. The Tree Preservation Plan identifies that the applicant will be making a payment to the Town under the Tree Preservation Law to offset the trees to be removed from the site. Approval of this fee should be obtained through the Town Board. This will be the first project to make payment under the Tree Preservation regulation. Any condition of approval should include the required payment.

14. A Tree Protection Detail should be added to the plan regarding trees which are to be preserved within limits of disturbance.

15. The applicants have added EV chargers to the plan sheet.

16. The project will contribute traffic to NYS Route 300. An analysis of the amount of traffic at the Route 300-Gardnertown/Route 300-52 intersection should be provided. The Town has previously required fair share of contributions to the improvements to mitigate traffic from the projects along the Route 300 corridor. A developer's Agreement with the Town of Newburgh must be established regarding this matter.

17. Not all detail sheets were included in the plans. Town of Newburgh water system notes and water details must be incorporated in the next submission.

18. The notes on the first page still contain a 290,000 square foot building references. These should be updated for the smaller building.

19. Bulk Table should be updated for the smaller building footprint proposed.

Respectfully submitted,

MHE Engineering, D.P.C.

Patrick J. Hines
Principal
PJH/ltm

SITE PLAN APPROVAL DRAWINGS

FARRELL INDUSTRIAL PARK

TAX MAP SECTION 34 | BLOCK 2 | LOT 45
ROUTE 300
TOWN OF NEWBURGH, NY
TOWN OF NEWBURGH PROJECT NO. 2023-09

Applicant:
YM & YH DEVELOPERS LLC
1156 59TH STREET
BROOKLYN, NY 11219
631-766-0023

Owner:
YM &YH DEVELOPERS LLC
1156 59TH STREET
BROOKLYN, NY 11219

Attorney:
WHITEMAN OSTERMAN & HANNA LLP
1 COMMERCE PLAZA
ALBANY, NY 12260
(518) 487-7692

Site Planner, Civil & Traffic Engineer, Surveyor and Landscape Architect:
JMC PLANNING ENGINEERING LANDSCAPE ARCHITECTURE & LAND SURVEYING PLLC:
120 BEDFORD ROAD
ARMONK, NY 10504
914-273-5225

Architect:
PRATT DESIGN STUDIO
175 10TH STREET,
BELFORD, NJ 07718
732-908-7232

Geotechnical Engineer:
CARLIN-SIMPSON & ASSOCIATES
61 MAIN STREET
SAYREVILLE, NJ 08872
732-432-5757

Natural Resources Consultant:
ECOLOGICAL SOLUTIONS, LLC
1248 SOUTHFORD ROAD
SOUTHBURY, CT 06488
203-910-4716

Cultural Resources Consultant:
HUDSON VALLEY CULTURAL RESOURCE CONSULTANTS, LTD.
P.O. BOX 264
SALT POINT, NY 12578
914-456-3698

Fire Protection Designer:
GLOBAL FIRE USA
59 GILBERT STREET SUITE 101
MONROE, NY 10950
845-781-0117

JMC Drawing List:

C-000 COVER SHEET
C-001 COVER SHEET (OCDH SEWAGE DISPOSAL)
C-002 COVER SHEET (OCDH WATERMAIN EXTENSION)
C-010 EXISTING CONDITIONS MAP AND SITE REMOVALS PLAN
C-020 TREE LIST
C-021 TREE LIST
C-022 TREE LIST
C-023 TREE LIST
C-024 TREE LIST
C-025 TREE LIST
C-026 TREE LIST
C-030 TREE PRESERVATION PLAN
C-031 TREE PRESERVATION PLAN
C-032 TREE PRESERVATION PLAN
C-033 TREE PRESERVATION PLAN
C-100 LAYOUT PLAN
C-101 SIGHT DISTANCE PLAN
C-200 GRADING PLAN
C-210 DRIVEWAY PROFILE
C-300 UTILITIES PLAN
C-310 ON SITE WASTEWATER TREATMENT SYSTEM PLAN
C-320 WATERMAIN EXTENSION PROFILE
C-400 EROSION AND SEDIMENT CONTROL PLAN
C-600 LIGHTING PLAN
C-700 TRUCK TURNING PLAN
C-900 CONSTRUCTION DETAILS
C-901 CONSTRUCTION DETAILS
C-902 CONSTRUCTION DETAILS
C-903 CONSTRUCTION DETAILS
C-904 CONSTRUCTION DETAILS
C-905 CONSTRUCTION DETAILS (OWTS)
C-906 CONSTRUCTION DETAILS (SITE ENTRANCE)
C-907 CONSTRUCTION DETAILS (SITE ENTRANCE)
C-908 CONSTRUCTION DETAILS
L-100 LANDSCAPE PLAN
L-900 LANDSCAPE DETAILS

JMC HIGHWAY DRAWING LIST: (REFERENCE ONLY)

HP-1 COVER SHEET
HP-2 GENERAL NOTES
HP-3 LAYOUT PLAN
HP-4 SIGNING, STRIPING, & LANDSCAPING PLAN
HP-5 TURNING ANALYSIS PLAN
HP-6 GRADING PLAN
HP-7 UTILITIES PLAN
HP-8 EROSION AND SEDIMENT CONTROL PLAN
HP-9 WORK ZONE TRAFFIC CONTROL PLAN
HP-10 WORK ZONE TRAFFIC CONTROL PLAN
HP-11 WORK ZONE TRAFFIC CONTROL PLAN
HP-12 NYSDOT DETAILS
HP-13 NYSDOT DETAILS
HP-14 NYSDOT DETAILS
HP-15 NYSDOT DETAILS
HP-16 NYSDOT DETAILS

Pratt Design Studio Drawing List:

SD1 GROUND FLOOR PLAN
SD2 OVERALL ROOF PLAN
SD3 ELEVATIONS
SD4 CROSS SECTIONS & MONUMENT SIGN

Global Fire USA Drawing List:

FP-0 FIR PROTECTION PLAN NOTES
FP-1 FIRE PROTECTION PLAN SYSTEM 1
FP-2 FIRE PROTECTION PLAN SYSTEM 2
FP-3 FIRE PROTECTION PLAN SYSTEM 3
FP-4 FIRE PROTECTION PLAN SYSTEM 4
FP-5 FIRE PROTECTION PLAN SYSTEM 5
FP-6 FIRE PROTECTION PLAN SYSTEM 6
FP-7 FIRE PROTECTION PLAN SYSTEM 7
FP-8 FIRE PROTECTION PLAN SYSTEM 8
FP-9 FIRE PROTECTION PLAN SYSTEM 9
FP-10 FIRE PROTECTION PLAN SYSTEM 10
FP-11 FIRE PROTECTION PLAN PUMP DETAILS

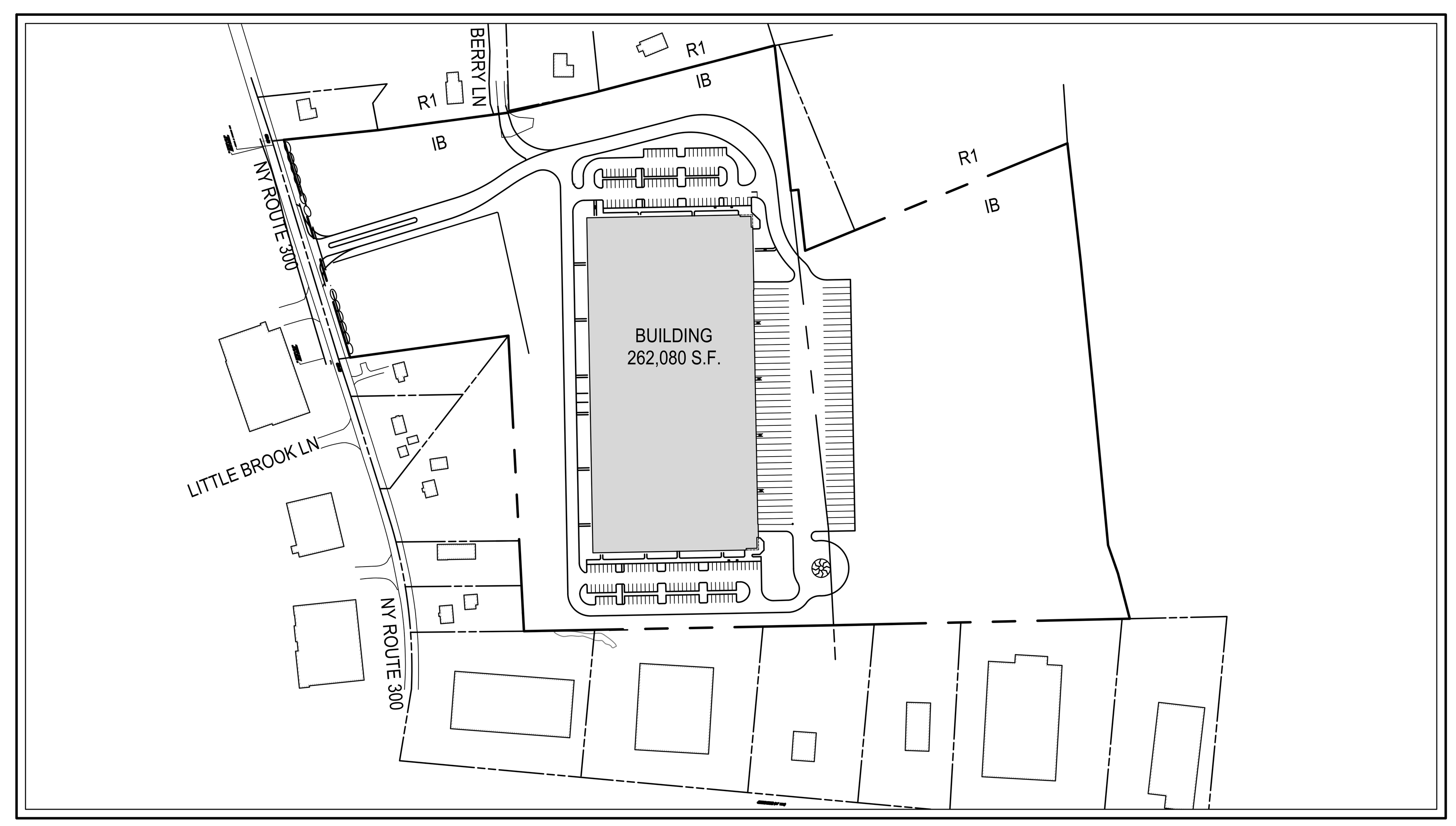

AREA MAP
SCALE: N.T.S.

TABLE OF LAND USE

SECTION 34, BLOCK 2, LOT 45[1]
ZONE "IB" – "INTERCHANGE BUSINESS"
PROPOSED USE: WAREHOUSE (D9)
PROPOSED ACCESSORY USES: OFF STREET PARKING (A4), TRUCK LOADING FACILITIES (A5)
FIRE DISTRICT: CRONOMER VALLEY
WATER DISTRICT: NEWBURGH
SCHOOL DISTRICT: NEWBURGH

DESCRIPTION		REQUIRED	EXISTING	APPROVED	PROPOSED
LOT AREA	(SQUARE FEET)	44,000	±1,545,969[1]	NO CHANGE[1]	NO CHANGE[1]
LOT WIDTH	(FEET)	150	±965	NO CHANGE	NO CHANGE
LOT DEPTH	(FEET)	150	±1,311	NO CHANGE	NO CHANGE
LOT BUILDING COVERAGE	(PERCENT)	40	N/A[2]	18.76[3]	16.95[4]
BUILDING HEIGHT	(FEET)	40	N/A[2]	39.49[5]	39.48[6]
LOT SURFACE COVERAGE	(PERCENT)	80	N/A[2]	40.93[7]	35.53[8]
YARDS					
FRONT BUILDING SETBACK	(FEET)	60[9]	N/A[2]	±354	±381
REAR BUILDING SETBACK	(FEET)	60	N/A[2]	±606	±699
SIDE BUILDING SETBACK	(FEET)	30/80/210[10]	N/A[2]	±131/496/365[10]	±103/262/261[10]
SIDE YARD BUFFER[11]	(FEET)	100	N/A[2]	±100	±100
PARKING SUMMARY[12]					
TOTAL SPACES	(SPACES)	194/100[13]	N/A[2]	250	186
STANDARD SPACES	(SPACES)	188/96[13]	N/A[2]	240	178
HANDICAP SPACES	(SPACES)	6/4[14]	N/A[2]	10	8
LOADING SPACES	(SPACES)	9/8[15]	N/A[2]	32	32
TRUCK/TRAILER SPACE	(SPACES)	N/A[2]	N/A[2]	34	38

(1) THE SITE IS ONE TAX LOT THAT INCLUDES TWO PARCELS. THE TWO EXISTING PARCELS WILL BE MERGED THROUGH THE OFFICE OF THE TAX ASSESSOR AT THE APPROPRIATE TIME.

(2) NOT APPLICABLE

(3) THE LOT BUILDING COVERAGE WAS CALCULATED AS FOLLOWS:
TOTAL BUILDING AREA = 290,000 S.F.
BUILDING COVERAGE – TOTAL BUILDING AREA/LOT AREA = 290,000 S.F./1,545,969 S.F. = 18.76%

(4) THE LOT BUILDING COVERAGE WAS CALCULATED AS FOLLOWS:
TOTAL BUILDING AREA = 262,080 S.F.
BUILDING COVERAGE – TOTAL BUILDING AREA/LOT AREA = 262,080 S.F./1,545,969 S.F. = 16.95%

(5) THE BUILDING HEIGHT SHOWN IS BASED UPON THE DIFFERENCE BETWEEN THE AVERAGE GRADE ALONG THE FACADE FACING THE STREET AND THE ELEVATION OF THE HIGHEST POINT OF THE ROOF. THE AVERAGE GRADE AT THE BUILDING HAS BEEN CALCULATED BY AVERAGING THE FINISHED GRADE ALONG THE FACADE AT 50 FOOT INCREMENTS (457.87 + 458.31 + 457.23 + 457.40 + 458.35 + 459.30 + 459.38 + 458.43 + 457.48 + 457.08 + 458.18 + 458.70 + 457.45 + 457.00 / 14 = 458.01. THE ELEVATION OF THE HIGHEST POINT OF THE ROOF IS 497.50 (FINISHED FLOOR ELEVATION (454.50) + THE BUILDING HEIGHT (43). THEREFORE, THE BUILDING HEIGHT IS 39.49 FEET (497.50 – 458.01).

(6) THE BUILDING HEIGHT SHOWN IS BASED UPON THE DIFFERENCE BETWEEN THE AVERAGE GRADE ALONG THE FACADE FACING THE STREET AND THE ELEVATION OF THE HIGHEST POINT OF THE ROOF. THE AVERAGE GRADE AT THE BUILDING HAS BEEN CALCULATED BY AVERAGING THE FINISHED GRADE ALONG THE FACADE AT 30 FOOT INCREMENTS (457.00 + 460.00 + 456.00 + 460.00 + 460.00 + 460.00 + 456.00 + 460.00 + 460.00 + 460.00 + 456.00 + 456.00 + 456.00 + 456.00 + 460.00 + 460.00 + 460.00 + 456.00 + 460.00 +460.00 + 460.00 + 456.00 + 460.00 + 460.00 + 458.00) / 25 = 458.52. THE ELEVATION OF THE HIGHEST POINT OF THE ROOF IS 498.00 (FINISHED FLOOR ELEVATION (456.00) + THE BUILDING HEIGHT (42). THEREFORE, THE BUILDING HEIGHT IS 39.48 FEET (498.00 – 458.52).

(7) THE LOT SURFACE COVERAGE WAS CALCULATED AS FOLLOWS:
TOTAL COVERAGE AREA – 290,000 S.F. (BUILDING) + 342,733 (PAVEMENT & SIDEWALKS) = 632,733 S.F.
SURFACE COVERAGE – TOTAL COVERAGE AREA/LOT AREA = 632,733 S.F./1,545,969 S.F. = 40.93%

(8) THE LOT SURFACE COVERAGE WAS CALCULATED AS FOLLOWS:
TOTAL COVERAGE AREA – 262,080 S.F. (BUILDING) + 287,225 (PAVEMENT & SIDEWALKS) = 549,305 S.F.
SURFACE COVERAGE – TOTAL COVERAGE AREA/LOT AREA = 549,305 S.F./1,545,969 S.F. = 35.53%

(9) PURSUANT TO SECTION 185–18.C.4.(b). OF THE TOWN CODE, FRONT YARDS ABUTTING A STATE HIGHWAY SHALL BE AT LEAST 60 FEET.

(10) PURSUANT TO THE TABLE OF USE AND BULK REQUIREMENTS FOR THE IB DISTRICT, THE MINIMUM SIDE YARD DIMENSION SHALL BE 30 FEET AND THE MINIMUM DIMENSION FOR BOTH SIDE YARDS SHALL BE 80 FEET. PURSUANT TO SECTION 185–18.C.5. OF THE TOWN CODE, SIDE YARDS OF A LOT IN THE IB DISTRICT ABUTTING A RESIDENTIAL DISTRICT WITH A TOTAL BUILDING FLOOR AREA BETWEEN 250,000 S.F. AND 500,000 S.F. SHALL HAVE A SETBACK OF 200 FEET, PLUS AN ADDITIONAL 2 FEET FOR EACH FOOT OF BUILDING HEIGHT OVER 35 FEET. THE NUMBERS PROVIDED ARE "ONE SIDE YARD/BOTH SIDE YARDS/SIDE YARD ADJACENT TO A RESIDENTIAL DISTRICT."

(11) PURSUANT TO SECTION 185–21.D.2. OF THE TOWN CODE, SITES IN THE IB ZONE THAT ARE ADJACENT TO A RESIDENTIAL ZONE SHALL HAVE A BUFFER STRIP OF 75 FEET. PURSUANT TO SECTION 185–21.D.3., THE BUFFER SHALL BE INCREASED TO 100 FEET. PURSUANT TO SECTION 185–21.E.6., THE 40 FEET CLOSEST TO THE PROPERTY LINE SHALL REMAIN UNDISTURBED IN ITS EXISTING VEGETATIVE STATE AND THE REMAINING 60 FEET SHALL BE ENHANCED.

(12) THE ANTICIPATED NUMBER OF EMPLOYEES FOR THE APPROVED PLAN WAS CALCULATED BASED UPON A CONSERVATIVE ASSUMPTION THAT THE ENERGYSTAR.GOV "WAREHOUSE SPACE USE INFORMATION" AND "WAREHOUSE DATA TRENDS", WHICH INDICATES AN AVERAGE OCCUPANT DENSITY FOR THE TOTAL NUMBER OF EMPLOYEES OF 0.5 OCCUPANTS PER 1,000 S.F. AND A 95TH PERCENTILE OF 1.5 EMPLOYEES PER 1,000 S.F. THIS CALCULATED TO 290 EMPLOYEES THE ANTICIPATED NUMBER OF EMPLOYEES FOR THE CURRENT APPLICATION IS BASED UPON CORRESPONDENCE PROVIDED BY THE FUTURE OPERATOR/ END USER FOR THE SITE, WHICH STATUS THAT THE MAXIMUM EMPLOYEE COUNT WOULD BE BASED UPON A RATIO OF 1 EMPLOYEE PER 1,750SF. THIS CALCULATES TO 150 EMPLOYEES. THAT THIS FACILITY WILL OPERATE WITH 1 EMPLOYEE PER 1,000 S.F. BASED UPON THE CURRENT APPLICATION REQUIRES 8 LOADING SPACES.

(13) THE TOWN PARKING REQUIREMENT IS 2 SPACES PER 3 EMPLOYEES. THEREFORE, THE APPROVED PLAN REQUIRED 194 PARKING SPACES ((290/3)X2). AND THE CURRENT APPLICATION REQUIRES 100 PARKING SPACES ((150/3) X 2).

(14) IN ACCORDANCE WITH ADA REQUIREMENTS THE TOTAL REQUIRED SPACES FOR THE APPROVED AND CURRENT APPLICATION REQUIRES 6 AND 4 ACCESSIBLE SPACES RESPECTIVELY.

(15) THE TOWN LOADING REQUIREMENT IS 2 SPACES FOR THE FIRST 40,000 S.F. AND ONE ADDITIONAL FOR EACH ADDITIONAL 40,000 S.F. THEREFORE, THE APPROVED BUILDING (290,000 S.F.) REQUIRES 8 LOADING SPACES (290,000 – 40,000 = 250,000) (250,000/40,000 = 6.25) (2 + 6.25 = 8.25). THE CURRENT APPLICATION REQUIRES 8 LOADING SPACES.

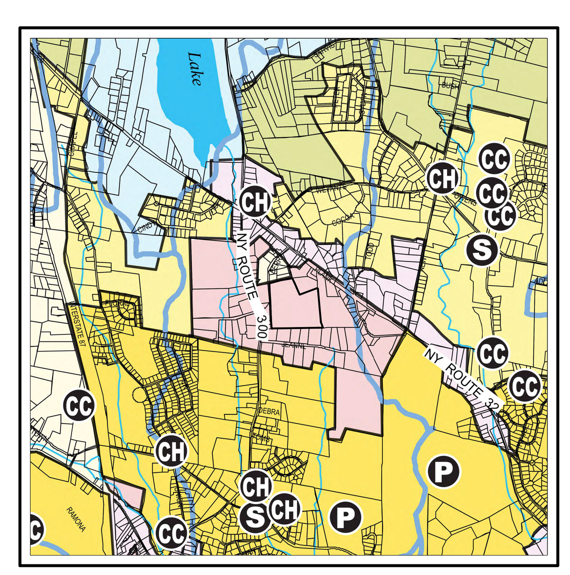

ZONING MAP
SCALE: 1" = 2,000'
SOURCE: TOWN OF NEWBURGH

LEGEND

Public Assembly Uses
- (S) School
- (P) Park/Recreation
- (CH) Worship
- (CC) Child Care
- ✱ Adult Use

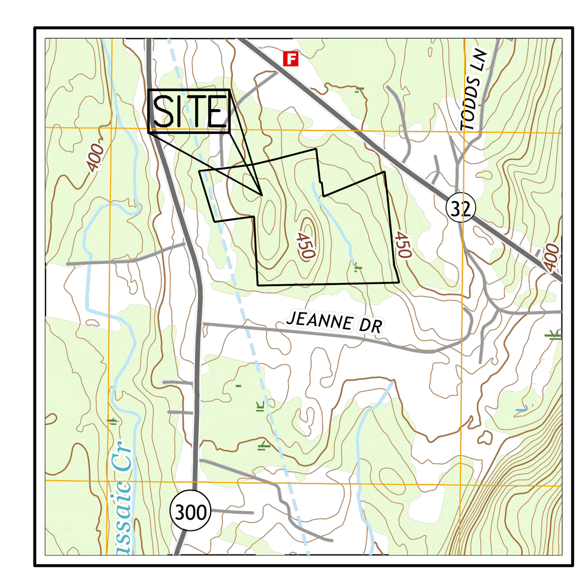

VICINITY MAP
SCALE: 1" = 1,000'
SOURCE: USGS TOPOGRAPHY

GENERAL CONSTRUCTION NOTES APPLY TO ALL WORK HEREIN:

1. PRIOR TO CONSTRUCTION, THE CONTRACTOR SHALL CALL 811 "DIG SAFELY" (1–800–962–7962) TO HAVE UNDERGROUND UTILITIES LOCATED. EXPLORATORY EXCAVATIONS SHALL COMPLY WITH CODE 753 REQUIREMENTS. NO WORK SHALL COMMENCE UNTIL ALL THE OPERATORS HAVE NOTIFIED THE CONTRACTOR THAT THEIR UTILITIES HAVE BEEN LOCATED. THE CONTRACTOR SHALL BE RESPONSIBLE FOR THE PRESERVATION OF ALL PUBLIC AND PRIVATE UNDERGROUND AND SURFACE UTILITIES AND STRUCTURES AT OR ADJACENT TO THE SITE OF CONSTRUCTION, INSOFAR AS THEY MAY BE ENDANGERED BY THE CONTRACTOR'S OPERATIONS. THIS SHALL HOLD TRUE WHETHER OR NOT THEY ARE SHOWN ON THE CONTRACT DRAWINGS. IF THEY ARE SHOWN ON THE DRAWINGS, THEIR LOCATIONS ARE NOT GUARANTEED EVEN THOUGH THE INFORMATION WAS OBTAINED FROM THE BEST AVAILABLE SOURCES, AND IN ANY EVENT, OTHER UTILITIES ON THESE PLANS MAY BE ENCOUNTERED IN THE FIELD. THE CONTRACTOR SHALL, AT HIS OWN EXPENSE, IMMEDIATELY REPAIR OR REPLACE ANY STRUCTURES OR UTILITIES THAT HE DAMAGES, AND SHALL CONSTANTLY PROCEED WITH CAUTION TO PREVENT UNDUE INTERRUPTION OF UTILITY SERVICE.
2. CONTRACTOR SHALL HAND DIG TEST PITS TO VERIFY THE LOCATION OF ALL EXISTING UNDERGROUND UTILITIES PRIOR TO THE START OF CONSTRUCTION. CONTRACTOR SHALL VERIFY EXISTING UTILITIES DEPTHS AND ADVISE OF ANY CONFLICTS WITH PROPOSED UTILITIES. IF CONFLICTS ARE PRESENT. THE OWNER'S FIELD REPRESENTATIVE, JMC, PLLC AND THE APPLICABLE MUNICIPALITY OR AGENCY SHALL BE NOTIFIED IN WRITING. THE EXISTING/PROPOSED UTILITIES RELOCATION SHALL BE DESIGNED BY JMC, PLLC.
3. CONTRACTOR IS RESPONSIBLE FOR OBTAINING ANY AND ALL LOCAL PERMITS REQUIRED.
4. ALL WORK SHALL BE DONE IN STRICT COMPLIANCE WITH ALL APPLICABLE NATIONAL, STATE, AND LOCAL CODES, STANDARDS, ORDINANCES, RULES, AND REGULATIONS. ALL CONSTRUCTION WORK SHALL BE PERFORMED IN ACCORDANCE WITH ALL SAFETY CODES. APPLICABLE SAFETY CODES MEAN THE LATEST EDITION INCLUDING ANY AND ALL AMENDMENTS, REVISIONS, AND ADDITIONS THERETO, TO THE FEDERAL DEPARTMENT OF LABOR, OCCUPATIONAL SAFETY AND HEALTH ADMINISTRATION'S OCCUPATIONAL SAFETY AND HEALTH STANDARDS (OSHA); AND APPLICABLE SAFETY, HEALTH REGULATIONS AND BUILDING CODES FOR CONSTRUCTION IN THE STATE OF NEW YORK. THE CONTRACTOR SHALL BE RESPONSIBLE FOR GUARDING AND PROTECTING ALL OPEN EXCAVATIONS IN ACCORDANCE WITH THE PROVISION OF SECTION 107–05 (SAFETY AND HEALTH REQUIREMENTS) OF THE NYSDOT STANDARD SPECIFICATIONS. IF THE CONTRACTOR PERFORMS ANY HAZARDOUS CONSTRUCTION PRACTICES, ALL OPERATIONS IN THE AFFECTED AREA SHALL BE DISCONTINUED AND IMMEDIATE ACTION SHALL BE TAKEN TO CORRECT THE SITUATION TO THE SATISFACTION OF THE APPROVAL AUTHORITY HAVING JURISDICTION.
5. CONTRACTOR SHALL MAINTAIN ACCESS TO ALL PROPERTIES AFFECTED BY THE SCOPE OF WORK SHOWN HEREON AT ALL TIMES TO THE SATISFACTION OF THE OWNERS REPRESENTATIVE. RAMPING CONSTRUCTION TO PROVIDE ACCESS MAY BE CONSTRUCTED WITH SUBBASE MATERIAL EXCEPT THAT TEMPORARY ASPHALT CONCRETE SHALL BE PLACED AS DIRECTED BY THE ENGINEER. THE CONTRACTOR SHALL BE RESPONSIBLE FOR PROVIDING SAFE PEDESTRIAN ACCESS AT ALL TIMES.
6. CONTRACTOR SHALL MAINTAIN THE INTEGRITY OF EXISTING PAVEMENT TO REMAIN.
7. THE CONTRACTOR SHALL OBTAIN A DEMOLITION PERMIT FROM THE TOWN OF NEWBURGH CODE ENFORCEMENT DEPARTMENT PRIOR TO DEMOLITION OF THE EXISTING ON–SITE STRUCTURES AND/OR ANY DEMOLITION ACTIVITIES.
8. PRIOR TO THE START OF CONSTRUCTION, THE CONTRACTOR SHALL SURVEY THE CLEARING AND GRADING LIMIT LINE, WHICH SHALL BE CLEARLY DELINEATED IN THE FIELD WITH THE USE OF ORANGE CONSTRUCTION OR CHAIN LINK FENCE. THE DELINEATED LIMITS SHALL BE SUBJECT TO THE REVIEW OF THE TOWN ENGINEER AND SHALL REMAIN IN PLACE FOR THE DURATION OF CONSTRUCTION. NO ENCROACHMENT BEYOND THESE LIMITS SHALL BE PERMITTED BY WORKERS AND/OR MACHINERY UNLESS OTHERWISE APPROVED BY THE TOWN ENGINEER.
9. THE CONTRACTOR IS INFORMED THAT BLASTING AND CHIPPING ARE PERMITTED FOR THE EXCAVATION OF ROCK. SHOULD THE CONTRACTOR ELECT TO USE BLASTING, THEY SHALL BE REQUIRED TO FOLLOW THE RECOMMENDATIONS SET FORTH IN THE GEOTECHNICAL REPORT AND OBTAIN A PERMIT FROM THE TOWN OF NEWBURGH, AS WELL AS FOLLOW ALL REGULATIONS AS OUTLINED IN CHAPTER 66 "BLASTING" OF THE TOWN OF NEWBURGH TOWN CODE.THE CONTRACTOR IS FURTHER INFORMED THAT THE TOWN CODE PERMITS BLASTING MONDAY THROUGH SATURDAY, BETWEEN THE HOURS OF 8 AM AND 7 PM.
10. THE CONTRACTOR IS INFORMED THAT CRUSHING OF THE ON SITE ROCK IS PERMITTED. HOWEVER, THE CONTRACTOR IS RESPONSIBLE FOR OBTAINING ALL REQUIRED TOWN PERMITS, AS WELL AS ANY PERMIT AND/OR APPROVALS REQUIRED FROM ANY OTHER LOCAL, STATE. AND/OR FEDERAL AGENCY.
11. THE PROPOSED BUILDING SHALL BE DESIGNED AND CONSTRUCTED SO THAT IT CAN ACCOMODATE ROOFTOP MOUNTED SOLAR PANELS.
12. PRIOR TO ISSUANCE OF A CERTIFICATE OF OCCUPANCY, THE PROPERTY OWNER SHALL PROVIDE THE TOWN OF NEWBURGH EMERGENCY SERVICES WITH WORKING KEYS FOR THE EMERGENCY ACCESS GATES ON SITE OR INSTALL KNOX BOXES WHERE AND AS DIRECTED BY THE TOWN OF NEWBURGH EMERGENCY SERVICES, WHICH SHALL INCULDE KEYS FOR THE EMERGENCY ACCESS GATES.
13. THE CONTRACTOR IS REFERED TO THE NYSDOT DRIVEWAY IMPROVEMENT DRAWINGS FOR WORK WITHIN THE AND ADJACENT TO THE NYSDOT RIGHT–OF–WAY.

COPYRIGHT © 2021 by JMC All Rights Reserved. No part of this document may be reproduced, stored in a retrieval system, or transmitted in any form or by any means, electronic, mechanical, photocopying, recording or otherwise, without the prior written permission of JMC PLANNING, ENGINEERING, LANDSCAPE ARCHITECTURE & LAND SURVEYING, PLLC | JMC SITE DEVELOPMENT CONSULTANTS, LLC | JOHN MEYER CONSULTING, INC. (JMC). Any modifications or alterations to this document without the written permission of JMC shall render them invalid and unusable.

NOT FOR CONSTRUCTION

SUBSURFACE UTILITY LOCATIONS ARE BASED ON A COMPILATION OF FIELD EVIDENCE, AVAILABLE RECORD PLANS AND/OR UTILITY MARK-OUTS. THE LOCATION OR COMPLETENESS OF UNDERGROUND INFORMATION CANNOT BE GUARANTEED. VERIFY THE ACTUAL LOCATION OF ALL UTILITIES PRIOR TO EXCAVATION OR CONSTRUCTION.

811 Know what's below. Call before you dig.

No.	Revision	Date	By
1.	REVISED PER PLANNING BOARD COMMENTS	06/19/2023	RFA

Previous Editions Obsolete

ANY ALTERATION OF PLANS, SPECIFICATIONS, PLATS AND REPORTS BEARING THE SEAL OF A LICENSED PROFESSIONAL ENGINEER OR LICENSED LAND SURVEYOR IS A VIOLATION OF SECTION 7209 OF THE NEW YORK STATE EDUCATION LAW, EXCEPT AS PROVIDED FOR BY SECTION 7209, SUBSECTION 2.

STATE OF NEW YORK · DIEGO A. VILLAREALE · LICENSED PROFESSIONAL ENGINEER

JMC Planning, Engineering, Landscape Architecture & Land Surveying, PLLC
JMC Site Development Consultants, LLC
John Meyer Consulting, Inc.
120 BEDFORD ROAD • ARMONK, NY 10504
voice 914.273.5225 • fax 914.273.2102
www.jmcpllc.com

Drawn: TC | Approved: DL/JS
Scale: NOT TO SCALE
Date: 04/19/2023
Project No: 22127
22127-COVER | C-000 | COVER.scr
Drawing No: C–000

TEST LOCATION LABELS LEGEND

Symbol	Description
B-X	BORING LOCATION/DESIGNATION
TP-X	TEST PIT LOCATION/DESIGNATION
SW-X	STORMWATER TEST LOCATION/DESIGNATION
TP-CX	CIVIL ENGINEER TEST PIT/PERCOLATION TEST LOCATION/DESIGNATION
TP-DX	SEPTIC SYSTEM PERCOLATION TEST LOCATION/DESIGNATION

TEST LOCATION LEGEND NOTES:

A. BORINGS, TEST PITS AND STORMWATER TESTS WERE PERFORMED BY CARLIN-SIMPSON AND ASSOCIATES. THE CIVIL ENGINEER TEST PITS/INFILTRATION TESTS WERE PERFORMED BY JMC, PLLC TO ACQUIRE INFORMATION FOR THE DESIGN OF THE PROPOSED ON SITE WASTEWATER TREATMENT SYSTEM.

Slopes Table

Number	Minimum Slope	Maximum Slope	Area	Color
1	0.00%	10.00%	1028253.21	
2	10.00%	15.00%	217534.38	
3	15.00%	20.00%	130180.05	
4	20.00%	Vertical	157637.78	

BORING AND TEST PIT TABLE

BORING/TEST PIT NO.	EXISTING GROUND SURFACE ELEVATION	DEPTH TO GROUNDWATER (ELEVATION)	DEPTH TO BEDROCK (ELEVATION)
B-1	+459.0	NE-(11'9")	AR-(11'9")
B-2	+457.0	NE-(15'0")	CWR-(11'5") AR-(15'0")
B-3	+443.0	NE-(12'0")	NE
B-4	+438.0	NE-(10'9")	NE
B-5	+434.5	NE-(16'0")	CWR-(10'0") AR-(16'0")
B-6	+451.0	NE-(20'3")	CWR-(19'0") AR-(20'3")
B-7	+441.0	NE-(10'2")	CWR-(5'0") AR-(10'2")
B-8	+439.0	NE-(14'6")	AR-(14'6")
B-9	+437.0	NE-(8'5")	AR-(8'5")
B-10	+471.0	NE-(6'0")	CWR-(5'0") C-(6'0")
B-11	+479.0	NE-(0'3")	C-(0'3")
B-12	+442.0	NE-(10'0")	AR-(10'0")
B-13	+450.0	NE-(13'0")	AR-(13'0")
B-14	+437.0	NE-(5'0")	CWR-(3'3") AR-(5'0")
B-15	+443.0	NE-(4'0")	CWR-(3'0") AR-(4'0")
B-16	+445.0	NE-(4'0")	CWR-(3'0") AR-(4'0")
B-17	+457.0	NE-(10'0")	C-(5'0")
B-18	+459.0	NE-(3'0")	CWR-(0'8") AR-(3'0")
B-19	+443.0	NE-(5'0")	AR-(5'0")
B-20	+461.0	NE-(4'6")	CWR-(2'5") AR-(4'6")
B-22	+463.0	NE-(7'0")	AR-(7'0")
B-23	+444.0	NE-(5'6")	CWR-(4'0") AR-(5'6")
B-25	+447.0	NE-(10'0")	AR-(10'0")
B-25A	+445.0	NE-(7'0")	NE-(7'0")
B-26	+445.0	NE-(11'0")	CWR-(8'6") AR-(11'0")
B-27	+460.0	NE-(9'6")	AR-(9'6")
B-28	+432.0	NE-(10'9")	AR-(10'9")
B-29	+433.0	NE-(9'11")	NE
B-30	+439.0	NE-(15'7")	AR-(15'7")
B-31	+421.0	NE-(10'5")	AR-(10'5")

BORING AND TEST PIT TABLE

BORING/TEST PIT NO.	EXISTING GROUND SURFACE ELEVATION	DEPTH TO GROUNDWATER (ELEVATION)	DEPTH TO BEDROCK (ELEVATION)
B-32	+421.0	NE-(17'0")	AR-(17'0")
B-33	+417.0	5'0"&3'0"	AR-(7'6")
B-34	+418.0	6'0"	AR-(17'0")
B-35	+417.0	5'6"	AR-(9'0")
TP-1	+455.0	NE-(7'0")	NE-(7'0")
TP-2	+448.0	NE-(6'6")	NE-(6'6")
TP-3	+463.0	NE-(3'3")	BR-(3'3")
TP-4	+461.0	NE-(8'0")	NE-(8'0")
TP-5	+476.0	NE-(0'6")	BR-(0'6")
TP-6	+474.0	NE-(3'3")	BR-(3'3")
TP-7	+452.0	NE-(8'3")	NE-(8'3")
TP-8	+446.0	NE-(8'0")	NE-(8'0")
TP-9	+464.0	NE-(4'8")	BR-(4'8")
TP-10	+460.0	NE-(0'4")	BR-(0'4")
TP-11	+449.0	NE-(7'0")	NE-(7'0")
TP-12	+443.0	NE-(3'0")	BR-(3'0")
TP-13	+431.0	NE-(3'0")	BR-(3'0")
TP-14	+434.0	NE-(8'0")	NE-(8'0")
TP-15	+438.0	NE-(8'3")	NE-(8'3")
TP-16	+458.0	NE-(4'6")	BR-(4'6")
TP-17	+468.0	NE-(2'0")	BR-(2'0")
TP-18	+452.0	NE-(9'9")	NE-(9'9")
TP-19	+446.0	NE-(9'0")	NE-(9'0")
TP-20	+467.0	NE-(6'3")	BR-(6'3")
TP-21	+445.0	NE-(13'9")	NE-(13'9")
TP-22	+445.0	NE-(5'6")	BR-(5'6")
TP-23	+464.0	NE-(2'9")	BR-(2'9")
TP-24	+432.0	NE-(8'0")	BR-(8'0")
TP-25	+438.0	NE-(6'0")	BR-(6'0")
TP-26	+440.0	NE-(6'3")	BR-(6'3")

BORING AND TEST PIT TABLE

BORING/TEST PIT NO.	EXISTING GROUND SURFACE ELEVATION	DEPTH TO GROUNDWATER (ELEVATION)	DEPTH TO BEDROCK (ELEVATION)
TP-27	+444.0	NE-(8'3")	NE-(8'3")
TP-28	+442.0	NE-(8'0")	NE-(8'0")
TP-29	+439.0	NE-(8'0")	NE-(8'0")
TP-30	+439.0	NE-(7'9")	NE-(7'9")
TP-31	+434.0	NE-(8'0")	NE-(8'0")
TP-32	+431.0	NE-(8'0")	NE-(8'0")
TP-33	+438.0	NE-(10'8")	NE-(10'8")
TP-34	+435.0	NE-(2'3")	BR-(2'3")
TP-35	+428.0	NE-(9'0")	NE-(9'0")
TP-36	+442.0	NE-(5'0")	BR-(5'0")
TP-37	+460.0	NE-(7'0")	BR-(7'0")
TP-38	+460.0	NE-(9'0")	BR-(9'0")
TP-39	+467.0	NE-(12'0")	BR-(12'0")
TP-40	+466.0	NE-(6'0")	BR-(6'0")
TP-41	+446.0	NE-(4'9")	BR-(4'9")
SW-1A	+442.0	NE-(7'3")	NE-(7'3")
SW-1B	+442.0	NE-(8'9")	NE-(8'9")
SW-2A	+437.0	NE-(13'4")	NE-(13'4")
SW-2B	+437.0	NE-(12'6")	NE-(12'6")
SW-2C	+438.0	NE-(12'3")	NE-(12'3")
SW-2D	+439.0	NE-(10'8")	NE-(10'8")
SW-3A	+419.0	7'10"	NE-(7'0")
SW-3B	+417.0	6'6"	NE-(+7'3")
SW-3C	+419.0	NE-(11'0")	NE-(11'0")
SW-3D	+417.0	8'0"	NE-(8'6")
SW-3E	+419.0	NE-(10'6")	NE-(10'6")
SW-3F	+416.0	NE-(9'10")	NE-(9'10")

AR/BR- AUGER OR BUCKET REFUSAL ON PROBABLE INTACT SHALE BEDROCK
NE- NOT ENCOUNTERED
CWR- COMPLETELY WEATHERED ROCK(RIPABLE WITH CAT 320)
C- CORED BEDROCK

LEGEND

- EXISTING PROPERTY LINE
- ADJACENT PROPERTY LINE
- EXISTING EASEMENT LINE
- EXISTING WETLAND LINE AND DELINEATION (WF-A1, WF-A2, WF-A3)
- EXISTING BUILDING LINE
- EXISTING PAVEMENT EDGE
- EXISTING CURB LINE
- EXISTING CONTOUR (452)
- EXISTING INDEX CONTOUR (450)
- EXISTING STONE WALL
- EXISTING FENCE
- EXISTING TREE LINE
- EXISTING STORM DRAIN LINE AND SIZE (36" RCP)
- EXISTING DOUBLE YELLOW PAINTED LINE
- EXISTING WHITE PAINTED LINE
- EXISTING FEATURE TO BE REMOVED
- EXISTING WATER LINE (W)
- EXISTING GAS LINE (G)
- EXISTING OVERHEAD WIRES (OHW)
- EXISTING TELEPHONE LINES (T)
- EXISTING DRAIN INLET
- EXISTING MANHOLE
- EXISTING FIRE HYDRANT
- EXISTING GAS VALVE
- EXISTING WATER VALVE
- EXISTING UTILITY POLE
- EXISTING SIGN
- PROPOSED LIMIT OF DISTURBANCE
- PROPOSED SAWCUT LINE

No.	Revision	Date	By
1.	REVISED PER PLANNING BOARD COMMENTS	06/19/2023	RFA

Previous Editions Obsolete

NOTES:

1. EXISTING CONDITIONS DEPICTED HEREON HAVE BEEN TAKEN FROM SURVEY TITLED, "TOPOGRAPHIC SURVEY OF PROPERTY," PREPARED BY JMC ENGINEERING, LANDSCAPE ARCHITECTURE & LAND SURVEYING, PLLC., LAST REVISED 08/09/2021. CONTRACTOR SHALL SATISFY HIM/HERSELF AS TO THE ACCURACY OF THE EXISTING INFORMATION SHOWN HEREON AND IDENTIFY ANY DISCREPANCIES PRIOR TO THE ISSUANCE OF A BID.
2. EXISTING WETLANDS WERE DELINEATED BY ECOLOGICAL SOLUTIONS, LLC IN ACCORDANCE WITH THE ARMY CORPS OF ENGINEERS (USACE) WETLANDS DELINEATION MANUAL (JANUARY 1987), ROUTINE DETERMINATION METHOD AND NORTHCENTRAL/NORTHEAST SUPPLEMENT. THE WETLANDS WERE DELINEATED ON MARCH 26, 2019 AS DESCRIBED IN THE REPORT ENTITLED "WETLAND DELINEATION", SEPTEMBER 21, 2020.
3. GEOTECHNICAL BORING/TEST PIT LOCATIONS DEPICTED ON THIS PLAN WERE TAKEN FROM THE GEOTECHNICAL REPORT ENTITLED, "REPORT ON SUBSURFACE SOIL AND FOUNDATION INVESTIGATION", DATED 10/14/2020, PREPARED BY CARLIN-SIMPSON AND ASSOCIATES, SUPPLEMENTED BY LOCATIONS OBSERVED BY JMC EMPLOYEES AND LOCATED USING GPS COORDINATES.
4. CONTRACTOR SHALL REFER TO GENERAL CONSTRUCTION NOTES ON DRAWING C-000 FOR ADDITIONAL DETAIL RELATED TO THE PROJECT SCOPE AND REQUIREMENTS FOR CONSTRUCTION.
5. THE CONTRACTOR SHALL VERIFY THE LOCATION OF EXISTING UTILITIES TO BE DEMOLISHED AND EXISTING UTILITIES TO BE PROTECTED. IF ANY DISCREPANCIES ARE FOUND, THE CONTRACTOR SHALL NOTIFY THE GENERAL CONTRACTOR AND JMC PRIOR TO THE START OF CONSTRUCTION.
6. PRIOR TO THE START OF ANY DEMOLITION THE CONTRACTOR SHALL OBTAIN ALL NECESSARY PERMITS AND/OR APPROVALS FROM THE TOWN OF NEWBURGH AND ALL OTHER AUTHORITIES HAVING JURISDICTION. CONTRACTOR SHALL PAY ALL OUTSTANDING FEES, CHARGES, AND DEPOSITS TO ACQUIRE SAID PERMITS. NO DEMOLITION SHALL COMMENCE UNTIL A PERMIT HAS BEEN OBTAINED FROM THE TOWN OF NEWBURGH.
7. ANY UNSUITABLE MATERIAL FOUND ON-SITE DURING CONSTRUCTION SHALL BE DISPOSED OF OFF-SITE IN A MANNER APPROVED BY ALL AUTHORITIES HAVING JURISDICTION AND REPLACED WITH SUITABLE MATERIAL AS REQUIRED. ALL REMOVAL AND REPLACEMENT OF UNSUITABLE MATERIAL SHALL BE COMPLETED UNDER THE DIRECT SUPERVISION OF A GEOTECHNICAL ENGINEER.
8. ALL DEMOLITION AND/OR CONSTRUCTION WITHIN THE RIGHT-OF-WAY, INCLUDING STREETS AND SIDEWALKS, SHALL BE PERFORMED IN ACCORDANCE WITH THE REQUIREMENTS AND CONDITIONS IMPOSED BY THE NEW YORK STATE DEPARTMENT OF TRANSPORTATION (NYSDOT) AND THE TOWN OF NEWBURGH AS APPLICABLE..
9. ALL CONSTRUCTION/DEMOLITION DEBRIS NOT PROPOSED TO BE RECYCLED SHALL BE REMOVED AND LEGALLY DISPOSED OF OFF-SITE IN ACCORDANCE WITH THE REGULATIONS OF ALL LOCAL, STATE AND FEDERAL AGENCIES HAVING JURISDICTION.
10. EXISTING CONCRETE MAY BE STORED ON SITE, AND RECYCLED FOR USE AS COMPACTED FILL. ALL MATERIAL TO BE USED AS FILL SHALL BE APPROVED BY THE PROJECT GEOTECHNICAL ENGINEER.
11. PRIOR TO THE START OF SITE DEMOLITION, EROSION AND SEDIMENT CONTROL DEVICES SHALL BE INSTALLED IN ACCORDANCE WITH THE NEW YORK STATE STANDARDS AND SPECIFICATIONS FOR EROSION AND SEDIMENT CONTROL, AS REQUIRED AND/OR DIRECTED BY THE TOWN OF NEWBURGH OR JMC.
12. EXISTING DRAINAGE PATTERNS ON SITE SHALL BE MAINTAINED TO THE MAXIMUM EXTENT PRACTICABLE.
13. ALL EXISTING UTILITY CASTINGS WHICH ARE TO REMAIN SHALL BE REMOVED AND RESET TO THE NEW PROPOSED GRADES IN ACCORDANCE WITH THE DIRECTIONS OF THE OWNER'S FIELD REPRESENTATIVE. EXISTING CASTINGS WHICH ARE DAMAGED OR UNFIT FOR INSTALLATION IN THE NEW CONSTRUCTION, AS DETERMINED BY THE OWNER'S FIELD REPRESENTATIVE, SHALL BE REPLACED.
14. ALL EXISTING SIDEWALKS, CURBS, PAVEMENT, ETC. TO REMAIN, WHICH ARE DISTURBED OR DAMAGED DUE TO THE NEW CONSTRUCTION, ARE TO BE REPLACED WITH MATERIALS CONSISTENT WITH EXISTING CONDITIONS.
15. THESE PLANS ARE TO BE PROVIDED TO BOTH THE DEMOLITION CONTRACTOR AND THE SITE CONTRACTOR FOR THEIR USE, INFORMATION AND COORDINATION. ANY QUESTIONS OF CONTRACTOR RESPONSIBILITY AND/OR SEPARATION OF WORK SHALL BE DIRECTED TO THE GENERAL CONTRACTOR IN WRITING PRIOR TO ISSUANCE OF BID.
16. THE OWNER SHALL RETAIN A LICENSED AND QUALIFIED PROFESSIONAL, CERTIFIED BY THE STATE OF NEW YORK, TO INSPECT FOR THE PRESENCE OF ASBESTOS AND/OR OTHER HAZARDOUS MATERIALS WITHIN DEMOLITION AREAS PRIOR TO THE COMMENCEMENT OF DEMOLITION. IF REMEDIATION IS REQUIRED, THE OWNER SHALL DO SO IN ACCORDANCE WITH THE NEW YORK STATE ASBESTOS RULES AND REGULATIONS AND/OR ANY AUTHORITIES HAVING JURISDICTION. THE CONTRACTOR SHALL PROVIDE ALL REQUIRED DOCUMENTATION TO THE TOWN OF NEWBURGH PRIOR TO OBTAINING A DEMOLITION PERMIT.
17. THE CONTRACTOR SHALL EXTERMINATE RODENTS AS REQUIRED BY THE ORANGE COUNTY DEPARTMENT OF HEALTH AND MENTAL HYGIENE. A LETTER FROM THE HEALTH DEPARTMENT CERTIFYING THAT A LICENSED EXTERMINATOR HAS TREATED THE EXISTING BUILDING SHALL BE PROVIDED TO THE TOWN OF NEWBURGH DEPARTMENT OF BUILDINGS.
18. PRIOR TO COMMENCEMENT OF DEMOLITION, THE CONTRACTOR MUST PROVIDE 24-HOUR NOTIFICATION TO THE TOWN OF NEWBURGH DEPARTMENT OF BUILDINGS.
19. THE CONTRACTOR SHALL PROVIDE VERIFICATION TO THE TOWN OF NEWBURGH DEPARTMENT OF BUILDINGS THAT FIVE (5) DAYS' PRIOR NOTIFICATION WAS GIVEN TO ALL ADJOINING OWNERS AND THAT NOTIFICATION WAS GIVEN TO THE APPROPRIATE COMMUNITY BOARD PRIOR TO THE COMMENCEMENT OF DEMOLITION.
20. STONES FROM FREESTANDING WALLS SHOWN HEREON TO BE REMOVED, SHALL BE STOCKPILED AS DIRECTED BY OWNER FOR FUTURE USE.
21. SEE DRAWING C-030 THROUGH C-033 TREE PRESERVATION PLAN FOR TREE REMOVAL AND PROTECTION

APPLICANT:
YM & YH DEVELOPERS LLC
1156 59TH STREET
BROOKLYN, NY 11219

JMC Planning, Engineering, Landscape Architecture & Land Surveying, PLLC
JMC Site Development Consultants, LLC
John Meyer Consulting, Inc.
120 BEDFORD ROAD • ARMONK, NY 10504
voice 914.273.5225 • fax 914.273.2102
www.jmcpllc.com

JMC

EXISTING CONDITIONS MAP AND SITE REMOVALS PLAN

FARRELL INDUSTRIAL PARK

ROUTE 300
TOWN OF NEWBURGH, NY

ANY ALTERATION OF PLANS, SPECIFICATIONS, PLATS AND REPORTS BEARING THE SEAL OF A LICENSED PROFESSIONAL ENGINEER OR LICENSED LAND SURVEYOR IS A VIOLATION OF SECTION 7209 OF THE NEW YORK STATE EDUCATION LAW, EXCEPT AS PROVIDED FOR BY SECTION 7209, SUBSECTION 2.

Drawn:	DK	Approved:	DL/JS
Scale:	1" = 50'		
Date:	04/19/2023		
Project No:	22127		
22127-BASE	EXIST	EXIST.scr	

Drawing No:
C-010
(OCDOH SEWAGE DISPOSAL SHEET 2 OF 5)

COPYRIGHT © 2021 by JMC All Rights Reserved. No part of this document may be reproduced, stored in a retrieval system, or transmitted in any form or by means, electronic, mechanical, photocopying, recording or otherwise, without the prior written permission of JMC PLANNING, ENGINEERING, LANDSCAPE ARCHITECTURE & LAND SURVEYING, PLLC | JMC SITE DEVELOPMENT CONSULTANTS, LLC | JOHN MEYER CONSULTING, INC. (JMC). Any modifications or alterations to this document without the written permission of JMC shall render them invalid and unusable.

OVERALL TREE LIST

POINT #	COMMON NAME	DBH	STEMS	CONDITION	INVASIVE	STATUS	SIGNIFICANT /SPECIMEN/ PROTECTED	TOTAL CALIPER (SIGNIFICANT)	TOTAL CALIPER (SPECIMEN)	PROTECTED BIG TREE
1	WHITE OAK	18	S	G	N	REMAIN	SIG	18	N/A	N/A
2	BLACK CHERRY	14	S	G	N	REMAIN	SIG	14	N/A	N/A
4	SUGAR MAPLE	10	S	G	N	REMOVE	N/A	N/A	N/A	N/A
6	WHITE ASH	20	S	P	N	REMOVE	N/A	N/A	N/A	N/A
8	BLACK CHERRY	10	S	P	N	REMAIN	N/A	N/A	N/A	N/A
9	WHITE OAK	10	S	G	N	REMOVE	N/A	N/A	N/A	N/A
10	RED OAK	10	S	G	N	REMOVE	N/A	N/A	N/A	N/A
12	SUGAR MAPLE	10	S	G	N	REMOVE	N/A	N/A	N/A	N/A
14	SMOOTHBARK HICKORY	10	S	G	N	REMAIN	N/A	N/A	N/A	N/A
15	BLACK CHERRY	12	S	F	N	REMAIN	N/A	N/A	N/A	N/A
16	SMOOTHBARK HICKORY	10	S	G	N	REMAIN	N/A	N/A	N/A	N/A
17	WHITE OAK	12	S	F	N	REMAIN	N/A	N/A	N/A	N/A
19	SHAGBARK HICKORY	12 10	S	G	N	REMAIN	N/A	N/A	N/A	N/A
21	RED OAK	12	S	F	N	REMAIN	N/A	N/A	N/A	N/A
22	BLACK CHERRY	10	S	G	N	REMAIN	N/A	N/A	N/A	N/A
26	WHITE OAK	10	TW	G	N	REMAIN	N/A	N/A	N/A	N/A
27	WHITE OAK	14 8	S	F	N	REMAIN	N/A	N/A	N/A	N/A
28	BLACK CHERRY	10 8	S	P	N	REMAIN	N/A	N/A	N/A	N/A
29	RED OAK	18	S	G	N	REMAIN	SIG	18	N/A	N/A
30	WHITE OAK	16	S	G	N	REMAIN	SIG	16	N/A	N/A
31	SMOOTHBARK HICKORY	12	S	G	N	REMAIN	N/A	N/A	N/A	N/A
32	BLACK CHERRY	10	S	G	N	REMAIN	N/A	N/A	N/A	N/A
34	RED OAK	16	S	G	N	REMOVE	SIG	16	N/A	N/A
37	SHAGBARK HICKORY	10	S	G	N	REMOVE	N/A	N/A	N/A	N/A
42	SUGAR MAPLE	10	S	G	N	REMOVE	N/A	N/A	N/A	N/A
44	WHITE OAK	10	S	G	N	REMOVE	N/A	N/A	N/A	N/A
45	SUGAR MAPLE	10	S	G	N	REMOVE	N/A	N/A	N/A	N/A
47	RED CEDAR	10	S	F	N	REMOVE	N/A	N/A	N/A	N/A
48	WHITE OAK	10	S	G	N	REMOVE	N/A	N/A	N/A	N/A
49	SHAGBARK HICKORY	12	TR	G	N	REMAIN	N/A	N/A	N/A	N/A
51	WHITE OAK	36 10	S	G	N	REMAIN	SP	N/A	36	N/A
52	AMERICAN ELM	10	S	G	N	REMAIN	N/A	N/A	N/A	N/A
54	AMERICAN ELM	14	S	G	N	REMOVE	SIG	14	N/A	N/A
55	SUGAR MAPLE	16	TR	G	N	REMAIN	SIG	48	N/A	N/A
57	BLACK CHERRY	10	S	P	N	REMAIN	N/A	N/A	N/A	N/A
59	BLACK CHERRY	10 8	S	F	N	REMAIN	N/A	N/A	N/A	N/A
60	BLACK CHERRY	10	S	F	N	REMAIN	N/A	N/A	N/A	N/A
63	BLACK CHERRY	10	S	G	N	REMAIN	N/A	N/A	N/A	N/A
67	RED OAK	32	S	G	N	REMAIN	SP	N/A	32	N/A
70	RED OAK	10	S	G	N	REMOVE	N/A	N/A	N/A	N/A
72	SUGAR MAPLE	16	S	G	N	REMAIN	SIG	16	N/A	N/A
75	SUGAR MAPLE	10	S	G	N	REMAIN	N/A	N/A	N/A	N/A
78	SUGAR MAPLE	18	TW	G	N	REMAIN	SIG	36	N/A	N/A
79	SUGAR MAPLE	14	S	G	N	REMAIN	SIG	14	N/A	N/A
80	SUGAR MAPLE	14	S	F	N	REMAIN	N/A	N/A	N/A	N/A
81	GREEN ASH	12	S	G	N	REMAIN	N/A	N/A	N/A	N/A
82	SUGAR MAPLE	30	S	G	N	REMAIN	SP	N/A	30	N/A
83	SUGAR MAPLE	12	S	G	N	REMAIN	N/A	N/A	N/A	N/A
84	BLACK WILLOW	18	S	G	N	REMAIN	PR	18	N/A	Y
86	SUGAR MAPLE	20	S	G	N	REMAIN	SP	N/A	20	N/A
87	SUGAR MAPLE	18	S	G	N	REMAIN	SIG	18	N/A	N/A
89	RED MAPLE	16	S	G	N	REMAIN	SIG	16	N/A	N/A
90	SUGAR MAPLE	12	S	G	N	REMAIN	N/A	N/A	N/A	N/A
91	SUGAR MAPLE	14	S	G	N	REMAIN	SIG	14	N/A	N/A
92	SUGAR MAPLE	28	S	G	N	REMOVE	SP	N/A	28	N/A
94	SUGAR MAPLE	20	S	G	N	REMOVE	SP	N/A	20	N/A
95	SUGAR MAPLE	40	S	F	N	REMOVE	PR	N/A	N/A	Y
96	SUGAR MAPLE	26	S	G	N	REMAIN	SP	N/A	26	N/A
97	WHITE ASH	12	S	P	N	REMAIN	N/A	N/A	N/A	N/A
98	SUGAR MAPLE	14 8	S	F	N	REMAIN	N/A	N/A	N/A	N/A
99	RED MAPLE	12	S	G	N	REMAIN	N/A	N/A	N/A	N/A
100	SUGAR MAPLE	14 12	S	G	N	REMAIN	SIG	14	N/A	N/A
102	SUGAR MAPLE	14	S	G	N	REMAIN	SIG	14	N/A	N/A
105	WHITE OAK	10	S	G	N	REMAIN	N/A	N/A	N/A	N/A
106	BLACK CHERRY	12	TW	P	N	REMAIN	N/A	N/A	N/A	N/A
107	SUGAR MAPLE	14	S	G	N	REMAIN	SIG	14	N/A	N/A
108	RED OAK	16	S	G	N	REMAIN	SIG	16	N/A	N/A
110	WHITE OAK	10	S	G	N	REMAIN	N/A	N/A	N/A	N/A
112	RED MAPLE	18	S	G	N	REMAIN	SIG	18	N/A	N/A
113	RED OAK	10	S	G	N	REMAIN	N/A	N/A	N/A	N/A
114	SUGAR MAPLE	18	S	G	N	REMAIN	SIG	18	N/A	N/A
115	SUGAR MAPLE	18	TW	G	N	REMAIN	SIG	36	N/A	N/A
116	SUGAR MAPLE	16	S	G	N	REMAIN	SIG	16	N/A	N/A
117	SHAGBARK HICKORY	10	S	G	N	REMAIN	N/A	N/A	N/A	N/A
118	SUGAR MAPLE	12 6	S	G	N	REMOVE	N/A	N/A	N/A	N/A
121	SMOOTHBARK HICKORY	10	S	G	N	REMAIN	N/A	N/A	N/A	N/A
122	SUGAR MAPLE	10	S	G	N	REMAIN	N/A	N/A	N/A	N/A
123	SUGAR MAPLE	10	S	G	N	REMAIN	N/A	N/A	N/A	N/A
124	SUGAR MAPLE	12	S	G	N	REMOVE	N/A	N/A	N/A	N/A
125	SUGAR MAPLE	12	MU	G	N	REMOVE	N/A	N/A	N/A	N/A
127	BLONDE MULBERRY	18	S	P	N	REMAIN	N/A	N/A	N/A	N/A
128	SUGAR MAPLE	24	S	G	N	REMAIN	SP	N/A	24	N/A
129	WHITE OAK	16	S	G	N	REMAIN	SIG	16	N/A	N/A
130	SUGAR MAPLE	14	S	G	N	REMAIN	SIG	14	N/A	N/A
131	SUGAR MAPLE	12	S	G	N	REMAIN	N/A	N/A	N/A	N/A
132	SUGAR MAPLE	10	S	F	N	REMAIN	N/A	N/A	N/A	N/A
133	SUGAR MAPLE	12	S	G	N	REMAIN	N/A	N/A	N/A	N/A
134	SUGAR MAPLE	14	S	F	N	REMAIN	N/A	N/A	N/A	N/A
135	SUGAR MAPLE	26	S	P	N	REMAIN	N/A	N/A	N/A	N/A
137	SUGAR MAPLE	18	S	G	N	REMAIN	SIG	18	N/A	N/A
138	SUGAR MAPLE	20	S	G	N	REMAIN	SP	N/A	20	N/A
140	SUGAR MAPLE	12	S	G	N	REMAIN	N/A	N/A	N/A	N/A
141	SUGAR MAPLE	10	S	G	N	REMAIN	N/A	N/A	N/A	N/A
142	SUGAR MAPLE	12	S	G	N	REMAIN	N/A	N/A	N/A	N/A
143	SUGAR MAPLE	16	S	G	N	REMAIN	SIG	16	N/A	N/A
144	SUGAR MAPLE	10	S	G	N	REMAIN	N/A	N/A	N/A	N/A
145	SHAGBARK HICKORY	12	S	G	N	REMAIN	N/A	N/A	N/A	N/A
146	SUGAR MAPLE	24	S	G	N	REMAIN	SP	N/A	24	N/A
147	SUGAR MAPLE	18	S	G	N	REMAIN	SIG	18	N/A	N/A
149	SUGAR MAPLE	10	S	G	N	REMAIN	N/A	N/A	N/A	N/A
151	SUGAR MAPLE	10	S	G	N	REMAIN	N/A	N/A	N/A	N/A
152	SUGAR MAPLE	14 10	S	F	N	REMAIN	N/A	N/A	N/A	N/A
153	RED OAK	36	S	G	N	REMAIN	SP	N/A	36	N/A
154	RED OAK	10	S	G	N	REMAIN	N/A	N/A	N/A	N/A
155	NORWAY MAPLE	12	S	G	Y	REMOVE	N/A	N/A	N/A	N/A
156	WHITE OAK	14	S	G	N	REMAIN	SIG	14	N/A	N/A
157	BLACK WALNUT	30	S	G	N	REMAIN	SP	N/A	30	N/A
158	AMERICAN ELM	12 6	S	G	N	REMAIN	N/A	N/A	N/A	N/A
159	GREEN ASH	14	S	G	N	REMAIN	SIG	14	N/A	N/A
160	SUGAR MAPLE	16	S	G	N	REMAIN	SIG	16	N/A	N/A
161	NORWAY MAPLE	18	S	G	Y	REMAIN	N/A	N/A	N/A	N/A
162	NORWAY MAPLE	12	S	G	Y	REMAIN	N/A	N/A	N/A	N/A

POINT #	COMMON NAME	DBH	STEMS	CONDITION	INVASIVE	STATUS	SIGNIFICANT /SPECIMEN/ PROTECTED	TOTAL CALIPER (SIGNIFICANT)	TOTAL CALIPER (SPECIMEN)	PROTECTED BIG TREE
163	DEAD	10	S	DEAD	N	REMAIN	N/A	N/A	N/A	N/A
164	NORWAY MAPLE	16	S	G	Y	REMAIN	N/A	N/A	N/A	N/A
165	NORWAY MAPLE	14	S	G	Y	REMAIN	N/A	N/A	N/A	N/A
166	WHITE OAK	18	S	G	N	REMAIN	SIG	18	N/A	N/A
167	NORWAY MAPLE	14	TW	G	Y	REMAIN	N/A	N/A	N/A	N/A
168	NORWAY MAPLE	14	S	G	Y	REMAIN	N/A	N/A	N/A	N/A
169	NORWAY MAPLE	10	S	G	Y	REMAIN	N/A	N/A	N/A	N/A
170	NORWAY MAPLE	12	S	G	Y	REMAIN	N/A	N/A	N/A	N/A
171	NORWAY MAPLE	18	S	G	Y	REMAIN	N/A	N/A	N/A	N/A
172	DEAD	10	S	DEAD	N	REMAIN	N/A	N/A	N/A	N/A
173	NORWAY MAPLE	12	S	G	Y	REMAIN	N/A	N/A	N/A	N/A
174	NORWAY MAPLE	12	TW	G	Y	REMAIN	N/A	N/A	N/A	N/A
175	NORWAY MAPLE	12	S	G	Y	REMAIN	N/A	N/A	N/A	N/A
176	NORWAY MAPLE	14	S	G	Y	REMAIN	N/A	N/A	N/A	N/A
177	RED OAK	20	S	G	N	REMAIN	SP	N/A	20	N/A
178	WHITE OAK	12	S	G	N	REMAIN	N/A	N/A	N/A	N/A
179	WHITE OAK	12	S	G	N	REMAIN	N/A	N/A	N/A	N/A
180	RED OAK	14	S	G	N	REMAIN	SIG	14	N/A	N/A
181	SUGAR MAPLE	10	S	G	N	REMOVE	N/A	N/A	N/A	N/A
182	SHAGBARK HICKORY	10	S	P	N	REMOVE	N/A	N/A	N/A	N/A
183	SMOOTHBARK HICKORY	10	S	G	N	REMAIN	N/A	N/A	N/A	N/A
184	SUGAR MAPLE	10	S	G	N	REMAIN	N/A	N/A	N/A	N/A
185	RED OAK	22	S	G	N	REMAIN	SP	N/A	22	N/A
186	RED OAK	30	S	G	N	REMAIN	SP	N/A	30	N/A
187	SMOOTHBARK HICKORY	10	S	G	N	REMAIN	N/A	N/A	N/A	N/A
188	SMOOTHBARK HICKORY	12	S	G	N	REMAIN	N/A	N/A	N/A	N/A
189	BLACK WALNUT	14	S	G	N	REMAIN	SIG	14	N/A	N/A
190	NORWAY MAPLE	10	S	G	Y	REMAIN	N/A	N/A	N/A	N/A
191	PIN OAK	16	S	G	N	REMAIN	SIG	16	N/A	N/A
192	SUGAR MAPLE	12	S	G	N	REMAIN	N/A	N/A	N/A	N/A
193	NORWAY MAPLE	12	S	G	Y	REMAIN	N/A	N/A	N/A	N/A
194	SUGAR MAPLE	10	S	G	N	REMAIN	N/A	N/A	N/A	N/A
195	SUGAR MAPLE	14	S	G	N	REMAIN	SIG	14	N/A	N/A
196	NORWAY MAPLE	10	S	G	Y	REMAIN	N/A	N/A	N/A	N/A
197	NORWAY MAPLE	14	S	G	Y	REMAIN	N/A	N/A	N/A	N/A
198	NORWAY MAPLE	16	S	G	Y	REMAIN	N/A	N/A	N/A	N/A
199	RED OAK	14	S	G	N	REMAIN	SIG	14	N/A	N/A
200	NORWAY MAPLE	10	TW	G	Y	REMAIN	N/A	N/A	N/A	N/A
201	SUGAR MAPLE	14	S	G	N	REMAIN	SIG	14	N/A	N/A
202	SUGAR MAPLE	18	S	G	N	REMAIN	SIG	18	N/A	N/A
203	SASSAFRAS	10	S	P	N	REMAIN	N/A	N/A	N/A	N/A
204	NORWAY MAPLE	24	S	G	Y	REMAIN	N/A	N/A	N/A	N/A
205	NORWAY MAPLE	10	S	G	Y	REMAIN	N/A	N/A	N/A	N/A
206	SUGAR MAPLE	12	S	G	N	REMAIN	N/A	N/A	N/A	N/A
207	NORWAY MAPLE	16	S	G	Y	REMAIN	N/A	N/A	N/A	N/A
208	DEAD	12	S	DEAD	N	REMAIN	N/A	N/A	N/A	N/A
209	NORWAY MAPLE	12	S	G	Y	REMAIN	N/A	N/A	N/A	N/A
210	BLACK WALNUT	14	S	G	N	REMAIN	SIG	14	N/A	N/A
211	NORWAY MAPLE	14	S	G	Y	REMAIN	N/A	N/A	N/A	N/A
212	NORWAY MAPLE	12	S	G	Y	REMAIN	N/A	N/A	N/A	N/A
213	NORWAY MAPLE	16	S	G	Y	REMAIN	N/A	N/A	N/A	N/A
214	BLACK CHERRY	10	S	G	N	REMAIN	N/A	N/A	N/A	N/A
215	NORWAY MAPLE	18	S	G	Y	REMAIN	N/A	N/A	N/A	N/A
216	NORWAY MAPLE	12	S	F	Y	REMAIN	N/A	N/A	N/A	N/A
217	SUGAR MAPLE	14	S	F	N	REMAIN	N/A	N/A	N/A	N/A
218	SUGAR MAPLE	12 6	S	F	N	REMAIN	N/A	N/A	N/A	N/A
219	BLACK CHERRY	10	S	P	N	REMAIN	N/A	N/A	N/A	N/A
220	SUGAR MAPLE	14	S	G	N	REMAIN	SIG	14	N/A	N/A
221	BLACK CHERRY	12	S	F	N	REMAIN	N/A	N/A	N/A	N/A
222	SUGAR MAPLE	12 8	S	F	N	REMAIN	N/A	N/A	N/A	N/A
223	SUGAR MAPLE	10	S	G	N	REMOVE	N/A	N/A	N/A	N/A
224	SUGAR MAPLE	12 8	S	G	N	REMAIN	N/A	N/A	N/A	N/A
225	NORWAY MAPLE	30	S	G	Y	REMAIN	N/A	N/A	N/A	N/A
226	NORWAY MAPLE	20	S	F	Y	REMOVE	N/A	N/A	N/A	N/A
227	SUGAR MAPLE	10	S	G	N	REMOVE	N/A	N/A	N/A	N/A
228	SUGAR MAPLE	10 6	S	G	N	REMAIN	N/A	N/A	N/A	N/A
229	SUGAR MAPLE	10	S	G	N	REMOVE	N/A	N/A	N/A	N/A
230	SUGAR MAPLE	10 8	S	G	N	REMOVE	N/A	N/A	N/A	N/A
231	NORWAY MAPLE	10	S	G	Y	REMOVE	N/A	N/A	N/A	N/A
232	BLACK CHERRY	10	TW	P	N	REMOVE	N/A	N/A	N/A	N/A
233	SUGAR MAPLE	10	S	G	N	REMOVE	N/A	N/A	N/A	N/A
234	NORWAY MAPLE	10	S	F	Y	REMOVE	N/A	N/A	N/A	N/A
235	RED OAK	26	S	G	N	REMOVE	SP	N/A	26	N/A
236	NORWAY MAPLE	14 8 6	S	G	Y	REMAIN	N/A	N/A	N/A	N/A
237	DEAD	10	S	DEAD	N	REMAIN	N/A	N/A	N/A	N/A
238	RED OAK	16	S	G	N	REMAIN	SIG	16	N/A	N/A
239	RED OAK	10	S	G	N	REMAIN	N/A	N/A	N/A	N/A
240	RED OAK	30	S	G	N	REMAIN	SP	N/A	30	N/A
241	SMOOTHBARK HICKORY	16 10	S	G	N	REMAIN	SIG	16	N/A	N/A
242	RED OAK	16	S	G	N	REMOVE	SIG	16	N/A	N/A
243	NORWAY MAPLE	16 10 6	S	P	Y	REMOVE	N/A	N/A	N/A	N/A
244	RED OAK	10	S	G	N	REMOVE	N/A	N/A	N/A	N/A
245	SUGAR MAPLE	10	S	G	N	REMAIN	N/A	N/A	N/A	N/A
246	RED OAK	12	S	G	N	REMOVE	N/A	N/A	N/A	N/A
247	RED OAK	10	S	G	N	REMOVE	N/A	N/A	N/A	N/A
248	SUGAR MAPLE	12 10	S	G	N	REMOVE	N/A	N/A	N/A	N/A
249	NORWAY MAPLE	20	S	G	Y	REMOVE	N/A	N/A	N/A	N/A
250	SUGAR MAPLE	14 8	S	G	N	REMOVE	SIG	14	N/A	N/A
251	SASSAFRAS	10	S	G	N	REMOVE	N/A	N/A	N/A	N/A
252	SASSAFRAS	10	S	G	N	REMOVE	N/A	N/A	N/A	N/A
253	SUGAR MAPLE	12	TW	G	N	REMOVE	N/A	N/A	N/A	N/A
254	RED OAK	22	S	G	N	REMOVE	SP	N/A	22	N/A
255	COTTONWOOD ASPEN	10	S	G	N	REMOVE	N/A	N/A	N/A	N/A
256	COTTONWOOD ASPEN	10	S	G	N	REMOVE	N/A	N/A	N/A	N/A
257	NORWAY MAPLE	10	S	G	Y	REMOVE	N/A	N/A	N/A	N/A
258	SHAGBARK HICKORY	10	S	F	N	REMOVE	N/A	N/A	N/A	N/A
259	RED OAK	10	S	G	N	REMOVE	N/A	N/A	N/A	N/A
260	RED OAK	18	S	G	N	REMOVE	SIG	18	N/A	N/A
261	COTTONWOOD ASPEN	10	S	G	N	REMOVE	N/A	N/A	N/A	N/A
262	NORWAY MAPLE	10	S	G	Y	REMOVE	N/A	N/A	N/A	N/A
263	SUGAR MAPLE	10	S	F	N	REMOVE	N/A	N/A	N/A	N/A
264	RED OAK	28	S	G	N	REMOVE	SP	N/A	28	N/A
265	NORWAY MAPLE	12	TR	G	Y	REMOVE	N/A	N/A	N/A	N/A
266	COTTONWOOD ASPEN	12	S	G	N	REMOVE	N/A	N/A	N/A	N/A
267	NORWAY MAPLE	10	S	G	Y	REMOVE	N/A	N/A	N/A	N/A
268	SUGAR MAPLE	10	S	G	N	REMOVE	N/A	N/A	N/A	N/A
269	SUGAR MAPLE	12	S	G	N	REMOVE	N/A	N/A	N/A	N/A
270	RED OAK	10	S	G	N	REMOVE	N/A	N/A	N/A	N/A
271	COTTONWOOD POP	14	S	F	N	REMOVE	N/A	N/A	N/A	N/A
272	SUGAR MAPLE	10	S	G	N	REMOVE	N/A	N/A	N/A	N/A

POINT #	COMMON NAME	DBH	STEMS	CONDITION	INVASIVE	STATUS	SIGNIFICANT /SPECIMEN/ PROTECTED	TOTAL CALIPER (SIGNIFICANT)	TOTAL CALIPER (SPECIMEN)	PROTECTED BIG TREE
273	SUGAR MAPLE	10	S	G	N	REMOVE	N/A	N/A	N/A	N/A
274	SUGAR MAPLE	12	S	P	N	REMOVE	N/A	N/A	N/A	N/A
275	SUGAR MAPLE	12	S	G	N	REMOVE	N/A	N/A	N/A	N/A
276	SUGAR MAPLE	14	S	G	N	REMOVE	SIG	14	N/A	N/A
277	SUGAR MAPLE	16	S	G	N	REMAIN	SIG	16	N/A	N/A
278	RED MAPLE	14	S	G	N	REMAIN	SIG	14	N/A	N/A
279	DEAD	10	S	DEAD	N	REMAIN	N/A	N/A	N/A	N/A
280	SUGAR MAPLE	12	S	G	N	REMAIN	N/A	N/A	N/A	N/A
281	NORWAY MAPLE	20	S	G	Y	REMAIN	N/A	N/A	N/A	N/A
282	RED MAPLE	10	S	G	N	REMAIN	N/A	N/A	N/A	N/A
283	RED MAPLE	10	S	G	N	REMAIN	N/A	N/A	N/A	N/A
284	SOURWOOD OXYDENDRUM	14	TW	G	N	REMAIN	PR	28	N/A	Y
285	WHITE ASH	14	S	G	N	REMAIN	SIG	14	N/A	N/A
286	WHITE ASH	10	S	P	N	REMOVE	N/A	N/A	N/A	N/A
287	BLACK CHERRY	10	S	G	N	REMOVE	N/A	N/A	N/A	N/A
288	BLACK CHERRY	12	S	F	N	REMOVE	N/A	N/A	N/A	N/A
289	WHITE ASH	18	S	G	N	REMAIN	SIG	18	N/A	N/A
290	WHITE OAK	12	S	G	N	REMAIN	N/A	N/A	N/A	N/A
291	BLACK CHERRY	10	S	G	N	REMAIN	N/A	N/A	N/A	N/A
292	BLACK CHERRY	12	S	G	N	REMAIN	N/A	N/A	N/A	N/A
293	DEAD	12	S	DEAD	N	REMAIN	N/A	N/A	N/A	N/A
294	WHITE ASH	10	S	P	N	REMAIN	N/A	N/A	N/A	N/A
295	NORWAY MAPLE	12	S	G	Y	REMAIN	N/A	N/A	N/A	N/A
296	WHITE OAK	10	S	G	N	REMAIN	N/A	N/A	N/A	N/A
297	WHITE WALNUT	14	S	G	N	REMAIN	SIG	14	N/A	N/A
298	SHAGBARK HICKORY	10	S	G	N	REMAIN	N/A	N/A	N/A	N/A
299	WHITE MULBERRY	10	S	P	N	REMAIN	N/A	N/A	N/A	N/A
300	SUGAR MAPLE	10	MU	G	N	REMAIN	N/A	N/A	N/A	N/A
301	DEAD	24	TW	DEAD	N	REMAIN	N/A	N/A	N/A	N/A
302	SUGAR MAPLE	12	MU	G	N	REMAIN	N/A	N/A	N/A	N/A
303	SHAGBARK HICKORY	10	S	F	N	REMAIN	N/A	N/A	N/A	N/A
304	RED MAPLE	10	S	G	N	REMAIN	N/A	N/A	N/A	N/A
305	WHITE ASH	10	S	P	N	REMAIN	N/A	N/A	N/A	N/A
306	DEAD	20	S	DEAD	N	REMAIN	N/A	N/A	N/A	N/A
307	WHITE WALNUT	24	S	G	N	REMAIN	SP	N/A	24	N/A
308	WHITE ASH	10	S	P	N	REMAIN	N/A	N/A	N/A	N/A
309	RED MAPLE	18 12 12	S	G	N	REMAIN	SIG	18	N/A	N/A
310	SUGAR MAPLE	14	S	G	N	REMAIN	SIG	14	N/A	N/A
311	SUGAR MAPLE	12 6 6	S	G	N	REMAIN	N/A	N/A	N/A	N/A
312	WHITE OAK	10	S	G	N	REMAIN	N/A	N/A	N/A	N/A
313	SHAGBARK HICKORY	10	S	G	N	REMAIN	N/A	N/A	N/A	N/A
314	SMOOTHBARK HICKORY	12	S	G	N	REMOVE	N/A	N/A	N/A	N/A
315	CHERRYBARK OAK	24	S	G	N	REMAIN	SP	N/A	24	N/A
316	AMERICAN ELM	10	S	G	N	REMAIN	N/A	N/A	N/A	N/A
317	RED MAPLE	12	S	G	N	REMAIN	N/A	N/A	N/A	N/A
318	DEAD	14	TW	DEAD	N	REMOVE	N/A	N/A	N/A	N/A
319	DEAD	10	S	DEAD	N	REMAIN	N/A	N/A	N/A	N/A
320	DEAD	10	S	DEAD	N	REMOVE	N/A	N/A	N/A	N/A
321	SUGAR MAPLE	14	S	G	N	REMOVE	SIG	14	N/A	N/A
322	SUGAR MAPLE	10	S	G	N	REMOVE	N/A	N/A	N/A	N/A
323	NORWAY MAPLE	10	S	G	Y	REMOVE	N/A	N/A	N/A	N/A
324	RED MAPLE	12	S	G	N	REMOVE	N/A	N/A	N/A	N/A
325	WHITE ASH	14	S	G	N	REMOVE	SIG	14	N/A	N/A
326	WHITE ASH	10	S	P	N	REMOVE	N/A	N/A	N/A	N/A
327	RED MAPLE	16	S	G	N	REMOVE	SIG	16	N/A	N/A
328	NORTHERN CATULPA	14	S	G	N	REMOVE	SIG	14	N/A	N/A
329	DEAD	12	S	DEAD	N	REMOVE	N/A	N/A	N/A	N/A
330	RED MAPLE	12	S	G	N	REMOVE	N/A	N/A	N/A	N/A
331	RED MAPLE	12 6	S	G	N	REMOVE	N/A	N/A	N/A	N/A
332	SUGAR MAPLE	14	S	G	N	REMOVE	SIG	14	N/A	N/A
333	BLACK CHERRY	10	S	G	N	REMOVE	N/A	N/A	N/A	N/A
334	BLACK CHERRY	10	S	G	N	REMOVE	N/A	N/A	N/A	N/A
335	SUGAR MAPLE	10	S	G	N	REMOVE	N/A	N/A	N/A	N/A
336	RED MAPLE	10	S	G	N	REMOVE	N/A	N/A	N/A	N/A
337	RED CEDAR	10	S	G	N	REMOVE	SIG	10	N/A	N/A
338	RED MAPLE	10	S	G	N	REMOVE	N/A	N/A	N/A	N/A
339	RED MAPLE	12	S	G	N	REMOVE	N/A	N/A	N/A	N/A
340	RED CEDAR	10	S	G	N	REMOVE	SIG	10	N/A	N/A
341	RED CEDAR	10	S	G	N	REMOVE	SIG	10	N/A	N/A
342	WHITE ASH	10	S	G	N	REMOVE	N/A	N/A	N/A	N/A
343	BLACK CHERRY	10	S	G	N	REMOVE	N/A	N/A	N/A	N/A
344	NORWAY MAPLE	12	S	G	Y	REMOVE	N/A	N/A	N/A	N/A
345	DEAD	10	S	DEAD	N	REMOVE	N/A	N/A	N/A	N/A
346	SUGAR MAPLE	10	S	G	N	REMOVE	N/A	N/A	N/A	N/A
347	WHITE ASH	10	S	G	N	REMOVE	N/A	N/A	N/A	N/A
348	WILD CHERRY	16	S	F	N	REMOVE	N/A	N/A	N/A	N/A
349	WHITE OAK	26	S	G	N	REMOVE	SP	N/A	26	N/A
350	SUGAR MAPLE	10	S	G	N	REMOVE	N/A	N/A	N/A	N/A
351	RED CEDAR	10	S	G	N	REMOVE	SIG	10	N/A	N/A
352	DEAD	14	S	DEAD	N	REMOVE	N/A	N/A	N/A	N/A
353	SHAGBARK HICKORY	10	S	G	N	REMOVE	N/A	N/A	N/A	N/A
354	SUGAR MAPLE	10	S	G	N	REMOVE	N/A	N/A	N/A	N/A
355	WHITE ASH	10	S	F	N	REMOVE	N/A	N/A	N/A	N/A
356	WHITE ASH	12	S	P	N	REMOVE	N/A	N/A	N/A	N/A
357	WHITE OAK	10	S	P	N	REMOVE	N/A	N/A	N/A	N/A
358	RED OAK	26	S	G	N	REMOVE	SP	N/A	26	N/A
359	SUGAR MAPLE	10	S	G	N	REMOVE	N/A	N/A	N/A	N/A
360	SUGAR MAPLE	26	S	G	N	REMOVE	SP	N/A	26	N/A
361	SHAGBARK HICKORY	10	S	G	N	REMOVE	N/A	N/A	N/A	N/A
362	WHITE ASH	10	S	P	N	REMOVE	N/A	N/A	N/A	N/A
363	SMOOTHBARK HICKORY	14	TW	G	N	REMOVE	SIG	28	N/A	N/A
364	SHAGBARK HICKORY	10	S	F	N	REMOVE	N/A	N/A	N/A	N/A
365	SUGAR MAPLE	10	S	P	N	REMOVE	N/A	N/A	N/A	N/A
366	SUGAR MAPLE	10	S	F	N	REMOVE	N/A	N/A	N/A	N/A
367	BLACK CHERRY	10	S	P	N	REMOVE	N/A	N/A	N/A	N/A
368	DEAD	10	MU	DEAD	N	REMOVE	N/A	N/A	N/A	N/A
369	SHAGBARK HICKORY	14 6	S	G	N	REMOVE	SIG	14	N/A	N/A
370	WHITE OAK	10	S	P	N	REMOVE	N/A	N/A	N/A	N/A
371	RED OAK	14	TW	G	N	REMOVE	SIG	28	N/A	N/A
372	RED OAK	20	S	G	N	REMOVE	SP	N/A	20	N/A
373	RED OAK	18	S	G	N	REMOVE	SIG	18	N/A	N/A
374	SUGAR MAPLE	10	S	G	N	REMOVE	N/A	N/A	N/A	N/A
375	NORWAY MAPLE	14 10	S	G	Y	REMOVE	N/A	N/A	N/A	N/A
376	RED OAK	18	MU	G	N	REMOVE	SIG	72	N/A	N/A
377	WHITE OAK	10	S	G	N	REMOVE	N/A	N/A	N/A	N/A
378	SHAGBARK HICKORY	10	S	F	N	REMOVE	N/A	N/A	N/A	N/A
379	WHITE OAK	10	S	F	N	REMOVE	N/A	N/A	N/A	N/A
380	SUGAR MAPLE	12	S	G	N	REMOVE	N/A	N/A	N/A	N/A
381	SUGAR MAPLE	10	S	G	N	REMOVE	N/A	N/A	N/A	N/A
382	SUGAR MAPLE	10	S	G	N	REMAIN	N/A	N/A	N/A	N/A
383	SUGAR MAPLE	12	S	G	N	REMAIN	N/A	N/A	N/A	N/A
384	NORWAY MAPLE	12	S	G	Y	REMAIN	N/A	N/A	N/A	N/A

TREE CHART ABBREVIATIONS

DBH – DIAMETER BREAST HEIGHT
S – SINGLE STEM
TW – TWIN STEM
TR – TRIPLE STEM
MU – MULTI STEM
G – GOOD CONDITION
F – FAIR CONDITION
P – POOR CONDITION
C – CRITICAL CONDITION
Y – YES
N – NO
SP – SPECIMEN TREE
SIG – SIGNIFICANT TREE
PR – PROTECTED
N/A – NOT APPLICABLE

No.	Revision	Date	By
1.	REVISED PER PLANNING BOARD COMMENTS	06/19/2023	RFA

Previous Editions Obsolete

APPLICANT:
YM & YH DEVELOPERS LLC
1156 59TH STREET
BROOKLYN, NY 11219

JMC Planning, Engineering, Landscape Architecture & Land Surveying, PLLC
JMC Site Development Consultants, LLC
John Meyer Consulting, Inc.
120 BEDFORD ROAD • ARMONK, NY 10504
voice 914.273.5225 • fax 914.273.2102
www.jmcpllc.com

OVERALL TREE LIST
FARRELL INDUSTRIAL PARK
ROUTE 300
TOWN OF NEWBURGH, NY

ANY ALTERATION OF PLANS, SPECIFICATIONS, PLATS AND REPORTS BEARING THE SEAL OF A LICENSED PROFESSIONAL ENGINEER OR LICENSED LAND SURVEYOR IS A VIOLATION OF ARTICLE 145 OF THE NEW YORK STATE EDUCATION LAW, EXCEPT AS PROVIDED FOR BY SECTION 7209, SUBSECTION 2.

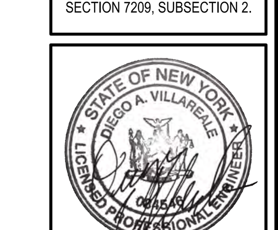

Drawn: TC Approved: DL/JS
Scale: N.T.S
Date: 04/19/2023
Project No: 22127
22127-TREE PLAN | C-020 | TREE.scr
Drawing No: C-020

NOT FOR CONSTRUCTION

COPYRIGHT © 2021 by JMC All Rights Reserved. No part of this document may be reproduced, stored in a retrieval system, or transmitted in any form or by means, electronic, mechanical, photocopying, recording or otherwise, without the prior written permission of JMC PLANNING, ENGINEERING, LANDSCAPE ARCHITECTURE & LAND SURVEYING, PLLC | JMC SITE DEVELOPMENT CONSULTANTS, LLC | JOHN MEYER CONSULTING, INC. (JMC). Any modifications or alterations to this document without the written permission of JMC shall render them invalid and unusable.

OVERALL TREE LIST

POINT #	COMMON NAME	DBH	STEMS	CONDITION	INVASIVE	STATUS	SIGNIFICANT /SPECIMEN/ PROTECTED	TOTAL CALIPER (SIGNIFICANT)	TOTAL CALIPER (SPECIMEN)	PROTECTED BIG TREE
384	NORWAY MAPLE	12	S	G	Y	REMAIN	N/A	N/A	N/A	N/A
385	BLACK CHERRY	10	S	G	N	REMAIN	N/A	N/A	N/A	N/A
386	DEAD	10	S	DEAD	N	REMAIN	N/A	N/A	N/A	N/A
387	SUGAR MAPLE	10	S	G	N	REMOVE	N/A	N/A	N/A	N/A
388	DEAD	10	S	DEAD	N	REMOVE	N/A	N/A	N/A	N/A
389	SUGAR MAPLE	10	S	G	N	REMOVE	N/A	N/A	N/A	N/A
390	RED OAK	12	S	G	N	REMOVE	N/A	N/A	N/A	N/A
391	WHITE ASH	12	S	P	N	REMOVE	N/A	N/A	N/A	N/A
392	RED OAK	10	TW	F	N	REMOVE	N/A	N/A	N/A	N/A
393	RED CEDAR	14	S	G	N	REMOVE	SIG	14	N/A	N/A
394	BLACK CHERRY	14	S	G	N	REMOVE	SIG	14	N/A	N/A
395	SUGAR MAPLE	10	S	G	N	REMOVE	N/A	N/A	N/A	N/A
396	DEAD	10	S	DEAD	N	REMOVE	N/A	N/A	N/A	N/A
397	RED MAPLE	10	S	G	N	REMOVE	N/A	N/A	N/A	N/A
398	BLACK CHERRY	10	S	G	N	REMOVE	N/A	N/A	N/A	N/A
399	DEAD	10	S	DEAD	N	REMOVE	N/A	N/A	N/A	N/A
400	DEAD	10	TW	DEAD	N	REMOVE	N/A	N/A	N/A	N/A
401	DEAD	10	S	DEAD	N	REMOVE	N/A	N/A	N/A	N/A
402	BLACK CHERRY	14	S	G	N	REMOVE	SIG	14	N/A	N/A
403	SUGAR MAPLE	10	S	G	N	REMOVE	N/A	N/A	N/A	N/A
404	CHERRY BLACK	10	S	F	N	REMOVE	N/A	N/A	N/A	N/A
405	RED OAK	10	S	G	N	REMOVE	N/A	N/A	N/A	N/A
406	SUGAR MAPLE	24	TW	G	N	REMOVE	SP	N/A	48	N/A
407	WHITE ASH	10	S	P	N	REMOVE	N/A	N/A	N/A	N/A
408	SUGAR MAPLE	10	S	G	N	REMOVE	N/A	N/A	N/A	N/A
409	WHITE ASH	10	S	F	N	REMOVE	N/A	N/A	N/A	N/A
410	BLACK CHERRY	10	S	F	N	REMOVE	N/A	N/A	N/A	N/A
411	SUGAR MAPLE	14	S	G	N	REMOVE	SIG	14	N/A	N/A
412	RED CEDAR	10	S	G	N	REMOVE	SIG	10	N/A	N/A
413	RED OAK	28	S	G	N	REMOVE	SP	N/A	28	N/A
414	BLACK CHERRY	10	S	F	N	REMOVE	N/A	N/A	N/A	N/A
415	DEAD	10	S	DEAD	N	REMOVE	N/A	N/A	N/A	N/A
416	SUGAR MAPLE	10	S	G	N	REMOVE	N/A	N/A	N/A	N/A
417	SUGAR MAPLE	10	S	G	N	REMOVE	N/A	N/A	N/A	N/A
418	BLACK CHERRY	10	S	F	N	REMOVE	N/A	N/A	N/A	N/A
419	DEAD	16	S	DEAD	N	REMOVE	N/A	N/A	N/A	N/A
420	SUGAR MAPLE	12	S	G	N	REMOVE	N/A	N/A	N/A	N/A
421	RED MAPLE	12	TW	G	N	REMOVE	N/A	N/A	N/A	N/A
422	SUGAR MAPLE	12	TW	G	N	REMOVE	N/A	N/A	N/A	N/A
423	RED CEDAR	10	S	F	N	REMOVE	N/A	N/A	N/A	N/A
424	NORWAY MAPLE	10	S	G	Y	REMOVE	N/A	N/A	N/A	N/A
425	BLACK CHERRY	10	S	F	N	REMOVE	N/A	N/A	N/A	N/A
426	RED OAK	10	S	G	N	REMOVE	N/A	N/A	N/A	N/A
427	WHITE PINE	18	S	G	N	REMOVE	SIG	18	N/A	N/A
428	RED CEDAR	14	S	G	N	REMOVE	SIG	14	N/A	N/A
429	RED OAK	10	S	G	N	REMOVE	N/A	N/A	N/A	N/A
430	SHAGBARK HICKORY	10	S	F	N	REMOVE	N/A	N/A	N/A	N/A
431	BLACK CHERRY	10	S	F	N	REMOVE	N/A	N/A	N/A	N/A
432	RED CEDAR	10	S	G	N	REMOVE	SIG	10	N/A	N/A
433	WHITE OAK	16	S	G	N	REMOVE	SIG	16	N/A	N/A
434	WHITE PINE	10	S	G	N	REMOVE	SIG	10	N/A	N/A
435	RED MAPLE	10	S	P	N	REMOVE	N/A	N/A	N/A	N/A
436	WHITE ASH	10	S	G	N	REMOVE	N/A	N/A	N/A	N/A
437	WHITE ASH	10	TW	G	N	REMOVE	N/A	N/A	N/A	N/A
438	WHITE MULBERRY	10	S	F	N	REMOVE	N/A	N/A	N/A	N/A
439	WHITE ASH	10	S	G	N	REMOVE	N/A	N/A	N/A	N/A
440	WHITE MULBERRY	10	S	P	N	REMOVE	N/A	N/A	N/A	N/A
441	RED CEDAR	10	MU	G	N	REMOVE	SIG	40	N/A	N/A
442	RED OAK	16	S	G	N	REMAIN	SIG	16	N/A	N/A
443	BLACK CHERRY	12	S	F	N	REMOVE	N/A	N/A	N/A	N/A
444	RED OAK	10	S	G	N	REMOVE	N/A	N/A	N/A	N/A
445	WHITE ASH	10	S	F	N	REMAIN	N/A	N/A	N/A	N/A
446	EASTERN COTTONWOOD	10	S	F	N	REMAIN	N/A	N/A	N/A	N/A
447	EASTERN COTTONWOOD	16	S	F	N	REMAIN	N/A	N/A	N/A	N/A
448	EASTERN COTTONWOOD	10	S	F	N	REMAIN	N/A	N/A	N/A	N/A
449	EASTERN COTTONWOOD	10	S	F	N	REMAIN	N/A	N/A	N/A	N/A
450	EASTERN COTTONWOOD	10	S	F	N	REMAIN	N/A	N/A	N/A	N/A
451	EASTERN COTTONWOOD	10	S	F	N	REMAIN	N/A	N/A	N/A	N/A
452	SUGAR MAPLE	10	S	G	N	REMAIN	N/A	N/A	N/A	N/A
453	EASTERN COTTONWOOD	10	S	G	N	REMAIN	N/A	N/A	N/A	N/A
454	FLOWERING DOGWOOD	10	S	G	N	REMAIN	N/A	N/A	N/A	N/A
455	WHITE MULBERRY	10	S	F	N	REMAIN	N/A	N/A	N/A	N/A
456	EASTERN COTTONWOOD	10	TW	G	N	REMAIN	N/A	N/A	N/A	N/A
457	EASTERN COTTONWOOD	10	S	P	N	REMAIN	N/A	N/A	N/A	N/A
458	RED MAPLE	16	S	P	N	REMAIN	N/A	N/A	N/A	N/A
459	RED MAPLE	14	S	G	N	REMAIN	SIG	14	N/A	N/A
460	WHITE ASH	10	S	G	N	REMOVE	N/A	N/A	N/A	N/A
461	WHITE ASH	20	S	G	N	REMOVE	SP	N/A	20	N/A
462	WHITE ASH	10	S	G	N	REMOVE	N/A	N/A	N/A	N/A
463	SUGAR MAPLE	20	TW	G	N	REMOVE	SP	N/A	40	N/A
464	BLACK CHERRY	10	S	F	N	REMOVE	N/A	N/A	N/A	N/A
465	RED MAPLE	20	S	F	N	REMOVE	N/A	N/A	N/A	N/A
466	RED OAK	14	MU	G	N	REMOVE	SIG	56	N/A	N/A
467	WHITE OAK	18 10	S	F	N	REMAIN	N/A	N/A	N/A	N/A
468	WHITE OAK	10	S	F	N	REMAIN	N/A	N/A	N/A	N/A
469	SHAGBARK HICKORY	10	S	G	N	REMAIN	N/A	N/A	N/A	N/A
470	SHAGBARK HICKORY	10	S	P	N	REMOVE	N/A	N/A	N/A	N/A
471	SMOOTHBARK HICKORY	14	S	G	N	REMAIN	SIG	14	N/A	N/A
472	SUGAR MAPLE	32	S	G	N	REMAIN	SP	N/A	32	N/A
473	RED OAK	14	S	G	N	REMAIN	SIG	14	N/A	N/A
474	SUGAR MAPLE	22	S	P	N	REMAIN	N/A	N/A	N/A	N/A
475	BLACK POPLAR	14	S	P	N	REMAIN	N/A	N/A	N/A	N/A
476	DEAD	24	S	DEAD	N	REMAIN	N/A	N/A	N/A	N/A
477	RED OAK	20	TW	G	N	REMAIN	SP	N/A	40	N/A
478	FIELD MAPLE	10	S	G	N	REMAIN	N/A	N/A	N/A	N/A
479	RED OAK	18	S	G	N	REMAIN	SIG	18	N/A	N/A
480	SUGAR MAPLE	12	S	G	N	REMAIN	N/A	N/A	N/A	N/A
481	RED OAK	24	S	G	N	REMAIN	SP	N/A	24	N/A
482	WHITE OAK	22	S	G	N	REMAIN	SP	N/A	22	N/A
483	RED OAK	16	S	G	N	REMAIN	SIG	16	N/A	N/A
484	SUGAR MAPLE	10	S	G	N	REMAIN	N/A	N/A	N/A	N/A
485	SUGAR MAPLE	12	S	G	N	REMAIN	N/A	N/A	N/A	N/A
486	SUGAR MAPLE	10	S	P	N	REMAIN	N/A	N/A	N/A	N/A
487	SMOOTHBARK HICKORY	14	S	G	N	REMAIN	SIG	14	N/A	N/A
488	SMOOTHBARK HICKORY	16	S	G	N	REMAIN	SIG	16	N/A	N/A
489	SMOOTHBARK HICKORY	12	S	G	N	REMAIN	N/A	N/A	N/A	N/A
490	AMERICAN ELM	10	S	G	N	REMAIN	N/A	N/A	N/A	N/A
491	SUGAR MAPLE	10	S	G	N	REMAIN	N/A	N/A	N/A	N/A

POINT #	COMMON NAME	DBH	STEMS	CONDITION	INVASIVE	STATUS	SIGNIFICANT /SPECIMEN/ PROTECTED	TOTAL CALIPER (SIGNIFICANT)	TOTAL CALIPER (SPECIMEN)	PROTECTED BIG TREE
492	AMERICAN ELM	12	S	G	N	REMAIN	N/A	N/A	N/A	N/A
493	SMOOTHBARK HICKORY	14	S	G	N	REMAIN	SIG	14	N/A	N/A
494	RED OAK	16	S	G	N	REMAIN	SIG	16	N/A	N/A
495	RED OAK	18	S	G	N	REMAIN	SIG	18	N/A	N/A
496	DEAD	10	TW	DEAD	N	REMAIN	N/A	N/A	N/A	N/A
497	SUGAR MAPLE	10	S	G	N	REMAIN	N/A	N/A	N/A	N/A
498	SUGAR MAPLE	10	S	G	N	REMAIN	N/A	N/A	N/A	N/A
499	RED OAK	18	S	G	N	REMAIN	SIG	18	N/A	N/A
500	RED OAK	26	S	G	N	REMAIN	SP	N/A	26	N/A
501	SUGAR MAPLE	12	S	P	N	REMAIN	N/A	N/A	N/A	N/A
502	SUGAR MAPLE	10	S	G	N	REMAIN	N/A	N/A	N/A	N/A
503	SMOOTHBARK HICKORY	10	S	F	N	REMAIN	N/A	N/A	N/A	N/A
504	RED OAK	10	S	G	N	REMAIN	N/A	N/A	N/A	N/A
505	RED OAK	28	S	G	N	REMAIN	SP	N/A	28	N/A
506	RED OAK	16	S	G	N	REMAIN	SIG	16	N/A	N/A
507	SUGAR MAPLE	16	S	G	N	REMAIN	SIG	16	N/A	N/A
508	WHITE ASH	10	S	G	N	REMAIN	N/A	N/A	N/A	N/A
509	AMERICAN HOPHORNBEAM	10	S	G	N	REMAIN	N/A	N/A	N/A	N/A
510	WHITE OAK	10	S	G	N	REMAIN	N/A	N/A	N/A	N/A
511	RED MAPLE	12	S	G	N	REMAIN	N/A	N/A	N/A	N/A
512	RED MAPLE	20	S	G	N	REMAIN	SP	N/A	20	N/A
513	RED MAPLE	18	S	G	N	REMAIN	SIG	18	N/A	N/A
514	RED OAK	10	S	G	N	REMAIN	N/A	N/A	N/A	N/A
515	AMERICAN HOPHORNBEAM	10	S	G	N	REMAIN	N/A	N/A	N/A	N/A
516	SHAGBARK HICKORY	10	S	G	N	REMAIN	N/A	N/A	N/A	N/A
517	BLACK WALNUT	16	MU	G	N	REMAIN	SIG	64	N/A	N/A
518	SUGAR MAPLE	10	S	G	N	REMAIN	N/A	N/A	N/A	N/A
519	WHITE ASH	20	S	G	N	REMAIN	SP	N/A	20	N/A
520	SUGAR MAPLE	10	S	G	N	REMAIN	N/A	N/A	N/A	N/A
521	SUGAR MAPLE	12	S	G	N	REMAIN	N/A	N/A	N/A	N/A
522	SUGAR MAPLE	10	S	G	N	REMAIN	N/A	N/A	N/A	N/A
523	SUGAR MAPLE	14	S	G	N	REMAIN	SIG	14	N/A	N/A
524	SUGAR MAPLE	12 10	S	G	N	REMAIN	N/A	N/A	N/A	N/A
525	RED MAPLE	26 10	S	G	N	REMAIN	SP	N/A	26	N/A
526	SUGAR MAPLE	12	S	G	N	REMAIN	N/A	N/A	N/A	N/A
527	RED MAPLE	12	S	F	N	REMAIN	N/A	N/A	N/A	N/A
528	RED MAPLE	14	S	G	N	REMAIN	SIG	14	N/A	N/A
529	AMERICAN HOPHORNBEAM	10	S	F	N	REMAIN	N/A	N/A	N/A	N/A
530	SHAGBARK HICKORY	10	S	G	N	REMOVE	N/A	N/A	N/A	N/A
531	SHAGBARK HICKORY	10	S	G	N	REMOVE	N/A	N/A	N/A	N/A
532	RED OAK	22	S	G	N	REMOVE	SP	N/A	22	N/A
533	WHITE OAK	10	S	G	N	REMOVE	N/A	N/A	N/A	N/A
534	RED OAK	28	S	G	N	REMOVE	SP	N/A	28	N/A
535	RED OAK	18	S	G	N	REMOVE	SIG	18	N/A	N/A
536	BLACK OAK	14	S	G	N	REMOVE	SIG	14	N/A	N/A
537	SHAGBARK HICKORY	14	S	G	N	REMOVE	SIG	14	N/A	N/A
538	SUGAR MAPLE	10	S	G	N	REMOVE	N/A	N/A	N/A	N/A
539	RED MAPLE	16 14	S	G	N	REMOVE	SIG	30	N/A	N/A
540	WHITE OAK	14 12	S	G	N	REMAIN	SIG	14	N/A	N/A
541	RED MAPLE	18	S	G	N	REMOVE	SIG	18	N/A	N/A
542	RED MAPLE	16 10	S	G	N	REMOVE	SIG	16	N/A	N/A
543	WHITE OAK	16 14	S	G	N	REMAIN	SIG	30	N/A	N/A
544	WHITE OAK	24	S	G	N	REMAIN	SP	N/A	24	N/A
545	WHITE OAK	14	S	G	N	REMAIN	SIG	14	N/A	N/A
546	SHAGBARK HICKORY	20	S	F	N	REMAIN	N/A	N/A	N/A	N/A
547	DEAD	10	S	DEAD	N	REMOVE	N/A	N/A	N/A	N/A
548	SMOOTHBARK HICKORY	12	S	F	N	REMOVE	N/A	N/A	N/A	N/A
549	TREE OF HEAVEN	12	S	G	Y	REMAIN	N/A	N/A	N/A	N/A
550	TREE OF HEAVEN	12	S	G	Y	REMAIN	N/A	N/A	N/A	N/A
551	DEAD	14	S	DEAD	N	REMOVE	N/A	N/A	N/A	N/A
552	RED MAPLE	10	S	F	N	REMOVE	N/A	N/A	N/A	N/A
553	RED OAK	32	S	G	N	REMAIN	SP	N/A	32	N/A
554	SUGAR MAPLE	12	S	G	N	REMAIN	N/A	N/A	N/A	N/A
555	SASSAFRAS	10	S	P	N	REMAIN	N/A	N/A	N/A	N/A
556	SASSAFRAS	10	S	P	N	REMAIN	N/A	N/A	N/A	N/A
557	POLAR BASSWOOD	24	S	G	N	REMAIN	SP	N/A	24	N/A
558	SUGAR MAPLE	14 12	S	G	N	REMAIN	SIG	14	N/A	N/A
559	SASSAFRAS	10	S	F	N	REMAIN	N/A	N/A	N/A	N/A
560	SUGAR MAPLE	10	TR	G	N	REMAIN	N/A	N/A	N/A	N/A
561	SUGAR MAPLE	12 10 8	S	G	N	REMAIN	N/A	N/A	N/A	N/A
562	RED OAK	26	S	G	N	REMAIN	SP	N/A	26	N/A
563	WHITE ASH	14	S	P	N	REMAIN	N/A	N/A	N/A	N/A
564	BLACK WALNUT	14	S	G	N	REMAIN	SIG	14	N/A	N/A
565	SHAGBARK HICKORY	10	S	G	N	REMAIN	N/A	N/A	N/A	N/A
566	BLACK CHERRY	14	S	G	N	REMAIN	SIG	14	N/A	N/A
567	AMERICAN HOPHORNBEAM	10	S	F	N	REMOVE	N/A	N/A	N/A	N/A
568	RED MAPLE	12	S	G	N	REMOVE	N/A	N/A	N/A	N/A
569	WILD CHERRY	14	S	G	N	REMOVE	SIG	14	N/A	N/A
570	BLACK OAK	18	S	G	N	REMOVE	SIG	18	N/A	N/A
571	WHITE MULBERRY	10	S	P	N	REMOVE	N/A	N/A	N/A	N/A
572	DEAD	10	S	DEAD	N	REMOVE	N/A	N/A	N/A	N/A
573	DEAD	10	S	DEAD	N	REMOVE	N/A	N/A	N/A	N/A
574	SUGAR MAPLE	14	S	G	N	REMOVE	SIG	14	N/A	N/A
575	WILD CHERRY	16	S	F	N	REMOVE	N/A	N/A	N/A	N/A
576	RED MAPLE	12	TW	F	N	REMOVE	N/A	N/A	N/A	N/A
577	WHITE ASH	10	S	P	N	REMOVE	N/A	N/A	N/A	N/A
578	WHITE ASH	10	S	P	N	REMOVE	N/A	N/A	N/A	N/A
579	TREE OF HEAVEN	24	S	G	Y	REMOVE	N/A	N/A	N/A	N/A
580	WILD CHERRY	10	S	G	N	REMOVE	N/A	N/A	N/A	N/A
581	WILD CHERRY	10	S	G	N	REMOVE	N/A	N/A	N/A	N/A
582	SUGAR MAPLE	10	S	G	N	REMOVE	N/A	N/A	N/A	N/A
583	WILD CHERRY	10	S	G	N	REMOVE	N/A	N/A	N/A	N/A
584	NORWAY MAPLE	14	S	G	Y	REMOVE	N/A	N/A	N/A	N/A
585	DEAD	12	S	DEAD	N	REMOVE	N/A	N/A	N/A	N/A
586	AMERICAN ELM	12	S	P	N	REMOVE	N/A	N/A	N/A	N/A
587	RED MAPLE	10	TW	G	N	REMOVE	N/A	N/A	N/A	N/A
588	RED MAPLE	28	S	G	N	REMOVE	SP	N/A	28	N/A
589	SYCAMORE	18	S	G	N	REMOVE	SIG	18	N/A	N/A
590	DEAD	10	S	DEAD	N	REMOVE	N/A	N/A	N/A	N/A
591	SUGAR MAPLE	10	S	G	N	REMOVE	N/A	N/A	N/A	N/A
592	SUGAR MAPLE	12 10	S	G	N	REMOVE	N/A	N/A	N/A	N/A
593	WHITE ASH	10	S	P	N	REMOVE	N/A	N/A	N/A	N/A
594	DEAD	10	S	DEAD	N	REMOVE	N/A	N/A	N/A	N/A
595	SUGAR MAPLE	12	S	G	N	REMOVE	N/A	N/A	N/A	N/A
596	SUGAR MAPLE	10	S	G	N	REMOVE	N/A	N/A	N/A	N/A
597	RED MAPLE	12	S	G	N	REMOVE	N/A	N/A	N/A	N/A
598	SUGAR MAPLE	10	S	G	N	REMOVE	N/A	N/A	N/A	N/A
599	SUGAR MAPLE	10	S	G	N	REMOVE	N/A	N/A	N/A	N/A
600	SUGAR MAPLE	10	S	G	N	REMOVE	N/A	N/A	N/A	N/A
601	SUGAR MAPLE	14	S	G	N	REMOVE	SIG	14	N/A	N/A
602	RED MAPLE	14	S	G	N	REMOVE	SIG	14	N/A	N/A

POINT #	COMMON NAME	DBH	STEMS	CONDITION	INVASIVE	STATUS	SIGNIFICANT /SPECIMEN/ PROTECTED	TOTAL CALIPER (SIGNIFICANT)	TOTAL CALIPER (SPECIMEN)	PROTECTED BIG TREE
603	SUGAR MAPLE	12	S	G	N	REMOVE	N/A	N/A	N/A	N/A
604	SYCAMORE	12	S	G	N	REMOVE	N/A	N/A	N/A	N/A
605	SUGAR MAPLE	12	TW	G	N	REMOVE	N/A	N/A	N/A	N/A
606	SUGAR MAPLE	12	TW	G	N	REMOVE	N/A	N/A	N/A	N/A
607	SUGAR MAPLE	10	S	G	N	REMOVE	N/A	N/A	N/A	N/A
608	SUGAR MAPLE	10	TW	G	N	REMOVE	N/A	N/A	N/A	N/A
609	SUGAR MAPLE	12	S	G	N	REMOVE	N/A	N/A	N/A	N/A
610	SUGAR MAPLE	10	S	G	N	REMOVE	N/A	N/A	N/A	N/A
611	SUGAR MAPLE	12	S	G	N	REMOVE	N/A	N/A	N/A	N/A
612	SUGAR MAPLE	18	S	G	N	REMOVE	SIG	18	N/A	N/A
613	SUGAR MAPLE	10	S	G	N	REMOVE	N/A	N/A	N/A	N/A
614	SUGAR MAPLE	12 10	S	G	N	REMOVE	N/A	N/A	N/A	N/A
615	AMERICAN ELM	12	S	P	N	REMOVE	N/A	N/A	N/A	N/A
616	DEAD	10	S	DEAD	N	REMOVE	N/A	N/A	N/A	N/A
617	DEAD	18	S	DEAD	N	REMOVE	N/A	N/A	N/A	N/A
618	RED OAK	16	S	G	N	REMOVE	SIG	16	N/A	N/A
619	RED MAPLE	14	MU	G	N	REMOVE	SIG	56	N/A	N/A
620	SUGAR MAPLE	10	S	G	N	REMOVE	N/A	N/A	N/A	N/A
621	SUGAR MAPLE	10	S	G	N	REMOVE	N/A	N/A	N/A	N/A
622	RED MAPLE	10	S	G	N	REMOVE	N/A	N/A	N/A	N/A
623	RED MAPLE	10	S	G	N	REMOVE	N/A	N/A	N/A	N/A
624	RED MAPLE	14	S	G	N	REMOVE	SIG	14	N/A	N/A
625	DEAD	10	S	DEAD	N	REMOVE	N/A	N/A	N/A	N/A
626	SUGAR MAPLE	10	S	G	N	REMOVE	N/A	N/A	N/A	N/A
627	RED MAPLE	10	S	G	N	REMOVE	N/A	N/A	N/A	N/A
628	RED MAPLE	10	S	G	N	REMOVE	N/A	N/A	N/A	N/A
629	EASTERN COTTONWOOD	14	S	G	N	REMOVE	SIG	14	N/A	N/A
630	SUGAR MAPLE	10	S	G	N	REMOVE	N/A	N/A	N/A	N/A
631	RED MAPLE	10	S	G	N	REMOVE	N/A	N/A	N/A	N/A
632	SUGAR MAPLE	12	S	G	N	REMOVE	N/A	N/A	N/A	N/A
633	SUGAR MAPLE	10	S	G	N	REMOVE	N/A	N/A	N/A	N/A
634	SUGAR MAPLE	10	S	G	N	REMOVE	N/A	N/A	N/A	N/A
635	RED MAPLE	16	S	G	N	REMOVE	SIG	16	N/A	N/A
636	SUGAR MAPLE	12	S	G	N	REMOVE	N/A	N/A	N/A	N/A
637	RED MAPLE	12	S	G	N	REMOVE	N/A	N/A	N/A	N/A
638	RED MAPLE	12	S	G	N	REMOVE	N/A	N/A	N/A	N/A
639	SUGAR MAPLE	14	S	G	N	REMOVE	SIG	14	N/A	N/A
640	SUGAR MAPLE	10	S	G	N	REMOVE	N/A	N/A	N/A	N/A
641	SUGAR MAPLE	10	S	G	N	REMOVE	N/A	N/A	N/A	N/A
642	RED MAPLE	10 8	S	G	N	REMOVE	N/A	N/A	N/A	N/A
643	RED MAPLE	10	S	G	N	REMOVE	N/A	N/A	N/A	N/A
644	NORWAY MAPLE	10	S	G	Y	REMOVE	N/A	N/A	N/A	N/A
645	DEAD	10	S	DEAD	N	REMOVE	N/A	N/A	N/A	N/A
646	SUGAR MAPLE	10	S	P	N	REMOVE	N/A	N/A	N/A	N/A
647	SUGAR MAPLE	12	MU	P	N	REMOVE	N/A	N/A	N/A	N/A
648	SUGAR MAPLE	12	S	G	N	REMOVE	N/A	N/A	N/A	N/A
649	AMERICAN ELM	10	S	G	N	REMOVE	N/A	N/A	N/A	N/A
650	RED MAPLE	12	S	G	N	REMOVE	N/A	N/A	N/A	N/A
651	SUGAR MAPLE	10	TW	G	N	REMOVE	N/A	N/A	N/A	N/A
652	RED MAPLE	22 12	S	G	N	REMOVE	SP	N/A	22	N/A
653	DEAD	10	S	DEAD	N	REMOVE	N/A	N/A	N/A	N/A
654	WHITE ASH	10	TW	P	N	REMOVE	N/A	N/A	N/A	N/A
655	BLACK CHERRY	12	S	P	N	REMOVE	N/A	N/A	N/A	N/A
656	RED OAK	26	TW	G	N	REMOVE	SP	N/A	52	N/A
657	SUGAR MAPLE	12	S	G	N	REMOVE	N/A	N/A	N/A	N/A
658	SUGAR MAPLE	10	S	G	N	REMOVE	N/A	N/A	N/A	N/A
659	SUGAR MAPLE	12	S	G	N	REMOVE	N/A	N/A	N/A	N/A
660	SUGAR MAPLE	14	S	G	N	REMOVE	SIG	14	N/A	N/A
661	SUGAR MAPLE	16	S	G	N	REMOVE	SIG	16	N/A	N/A
662	RED OAK	12	S	G	N	REMOVE	N/A	N/A	N/A	N/A
663	DEAD	12	S	DEAD	N	REMOVE	N/A	N/A	N/A	N/A
664	RED MAPLE	14 12	S	G	N	REMOVE	SIG	14	N/A	N/A
665	DEAD	14	S	DEAD	N	REMOVE	N/A	N/A	N/A	N/A
666	SUGAR MAPLE	16	S	G	N	REMOVE	SIG	16	N/A	N/A
667	SUGAR MAPLE	18	S	G	N	REMAIN	SIG	18	N/A	N/A
668	SASSAFRAS	10	S	F	N	REMOVE	N/A	N/A	N/A	N/A
669	SUGAR MAPLE	12	S	G	N	REMAIN	N/A	N/A	N/A	N/A
670	SUGAR MAPLE	12	S	G	N	REMAIN	N/A	N/A	N/A	N/A
671	SUGAR MAPLE	12	S	G	N	REMAIN	N/A	N/A	N/A	N/A
672	SUGAR MAPLE	12	S	G	N	REMOVE	N/A	N/A	N/A	N/A
673	SUGAR MAPLE	12 10 6	S	G	N	REMOVE	N/A	N/A	N/A	N/A
674	SUGAR MAPLE	14	S	G	N	REMOVE	SIG	14	N/A	N/A
675	RED MAPLE	16	MU	G	N	REMOVE	SIG	64	N/A	N/A
676	AMERICAN ELM	10	S	F	N	REMOVE	N/A	N/A	N/A	N/A
677	SYCAMORE	10	S	G	N	REMOVE	N/A	N/A	N/A	N/A
678	SUGAR MAPLE	14	S	G	N	REMOVE	SIG	14	N/A	N/A
679	SUGAR MAPLE	18 6	S	G	N	REMOVE	SIG	18	N/A	N/A
680	SUGAR MAPLE	14	S	G	N	REMOVE	SIG	14	N/A	N/A
681	SUGAR MAPLE	10	S	G	N	REMOVE	N/A	N/A	N/A	N/A
682	SYCAMORE	18	S	G	N	REMOVE	SIG	18	N/A	N/A
683	SUGAR MAPLE	14 10	D	G	N	REMOVE	SIG	14	N/A	N/A
684	SUGAR MAPLE	10	TW	G	N	REMOVE	N/A	N/A	N/A	N/A
685	RED MAPLE	10	S	G	N	REMOVE	N/A	N/A	N/A	N/A
686	RED MAPLE	16	S	G	N	REMOVE	SIG	16	N/A	N/A
687	SUGAR MAPLE	16	S	G	N	REMOVE	SIG	16	N/A	N/A
688	SUGAR MAPLE	12	S	G	N	REMOVE	N/A	N/A	N/A	N/A
689	SUGAR MAPLE	10	S	G	N	REMOVE	N/A	N/A	N/A	N/A
690	RED MAPLE	14	S	G	N	REMOVE	SIG	14	N/A	N/A
691	SUGAR MAPLE	10	S	G	N	REMOVE	N/A	N/A	N/A	N/A
692	SUGAR MAPLE	12	S	G	N	REMOVE	N/A	N/A	N/A	N/A
693	WHITE OAK	10	S	G	N	REMOVE	N/A	N/A	N/A	N/A
694	RED MAPLE	22	S	G	N	REMOVE	SP	N/A	22	N/A
695	SUGAR MAPLE	12	TR	G	N	REMOVE	N/A	N/A	N/A	N/A
696	RED MAPLE	14	S	G	N	REMOVE	SIG	14	N/A	N/A
697	DEAD	10	S	DEAD	N	REMOVE	N/A	N/A	N/A	N/A
698	SUGAR MAPLE	12	S	F	N	REMOVE	N/A	N/A	N/A	N/A
699	RED OAK	12	S	G	N	REMOVE	N/A	N/A	N/A	N/A
700	DEAD	10	S	DEAD	N	REMOVE	N/A	N/A	N/A	N/A
701	SUGAR MAPLE	10	TR	G	N	REMOVE	N/A	N/A	N/A	N/A
702	SYCAMORE	18	S	G	N	REMOVE	SIG	18	N/A	N/A
703	WHITE OAK	10	S	G	N	REMOVE	N/A	N/A	N/A	N/A
704	SUGAR MAPLE	24	S	G	N	REMOVE	SP	N/A	24	N/A
705	RED OAK	20	S	G	N	REMOVE	SP	N/A	20	N/A
706	RED OAK	12	S	G	N	REMOVE	N/A	N/A	N/A	N/A
707	SUGAR MAPLE	10	S	G	N	REMOVE	N/A	N/A	N/A	N/A
708	SASSAFRAS	10	S	P	N	REMAIN	N/A	N/A	N/A	N/A
709	SUGAR MAPLE	10	S	G	N	REMOVE	N/A	N/A	N/A	N/A
710	SMOOTHBARK HICKORY	12	S	G	N	REMOVE	N/A	N/A	N/A	N/A
711	SUGAR MAPLE	10	TW	G	N	REMOVE	N/A	N/A	N/A	N/A
712	BLACK OAK	12	S	G	N	REMOVE	N/A	N/A	N/A	N/A
713	WHITE OAK	14	S	G	N	REMOVE	SIG	14	N/A	N/A
714	RED OAK	14	S	G	N	REMOVE	SIG	14	N/A	N/A
715	RED OAK	28	S	F	N	REMAIN	N/A	N/A	N/A	N/A

TREE CHART ABBREVIATIONS

DBH – DIAMETER BREAST HEIGHT
S – SINGLE STEM
TW – TWIN STEM
TR – TRIPLE STEM
MU – MULTI STEM
G – GOOD CONDITION
F – FAIR CONDITION
P – POOR CONDITION
C – CRITICAL CONDITION
Y – YES
N – NO
SP – SPECIMEN TREE
SIG – SIGNIFICANT TREE
PR – PROTECTED
N/A – NOT APPLICABLE

No.	Revision	Date	By
1.	REVISED PER PLANNING BOARD COMMENTS	06/19/2023	RFA

Previous Editions Obsolete

APPLICANT:
YM & YH DEVELOPERS LLC
1156 59TH STREET
BROOKLYN, NY 11219

JMC Planning, Engineering, Landscape Architecture & Land Surveying, PLLC
JMC Site Development Consultants, LLC
John Meyer Consulting, Inc.
120 BEDFORD ROAD • ARMONK, NY 10504
voice 914.273.5225 • fax 914.273.2102
www.jmcpllc.com

TREE LIST
FARRELL INDUSTRIAL PARK
ROUTE 300
TOWN OF NEWBURGH, NY

ANY ALTERATION OF PLANS, SPECIFICATIONS, PLATS AND REPORTS BEARING THE SEAL OF A LICENSED PROFESSIONAL ENGINEER OR LICENSED LAND SURVEYOR IS A VIOLATION OF ARTICLE 145 OF THE NEW YORK STATE EDUCATION LAW, EXCEPT AS PROVIDED FOR BY SECTION 7209, SUBSECTION 2.

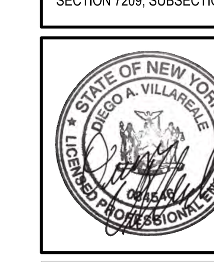

Drawn: TC Approved: DL/JS
Scale: N.T.S
Date: 04/19/2023
Project No: 22127
22127-TREE PLAN | C-021 | TREE.scr
Drawing No: C–021

NOT FOR CONSTRUCTION

COPYRIGHT © 2021 by JMC All Rights Reserved. No part of this document may be reproduced, stored in a retrieval system, or transmitted in any form or by means, electronic, mechanical, photocopying, recording or otherwise, without the prior written permission of JMC PLANNING, ENGINEERING, LANDSCAPE ARCHITECTURE & LAND SURVEYING, PLLC | JMC SITE DEVELOPMENT CONSULTANTS, LLC | JOHN MEYER CONSULTING, INC. (JMC). Any modifications or alterations to this document without the written permission of JMC shall render them invalid and unusable.

OVERALL TREE LIST

POINT #	COMMON NAME	DBH	STEMS	CONDITION	INVASIVE	STATUS	SIGNIFICANT /SPECIMEN/ PROTECTED	TOTAL CALIPER (SIGNIFICANT)	TOTAL CALIPER (SPECIMEN)	PROTECTED BIG TREE
716	RED OAK	22	S	F	N	REMOVE	N/A	N/A	N/A	N/A
717	SUGAR MAPLE	10	TR	G	N	REMOVE	N/A	N/A	N/A	N/A
718	RED MAPLE	12	MU	G	N	REMOVE	N/A	N/A	N/A	N/A
719	RED MAPLE	12	TR	G	N	REMOVE	N/A	N/A	N/A	N/A
720	SMOOTHBARK HICKORY	14	S	G	N	REMOVE	SIG	14	N/A	N/A
721	RED MAPLE	10	S	G	N	REMOVE	N/A	N/A	N/A	N/A
722	RED OAK	32	S	G	N	REMAIN	SP	N/A	32	N/A
723	SMOOTHBARK HICKORY	18	S	G	N	REMOVE	SIG	18	N/A	N/A
724	RED OAK	12	S	G	N	REMOVE	N/A	N/A	N/A	N/A
725	SYCAMORE	10	S	F	N	REMOVE	N/A	N/A	N/A	N/A
726	WHITE OAK	12	S	F	N	REMOVE	N/A	N/A	N/A	N/A
727	RED OAK	10	S	G	N	REMOVE	N/A	N/A	N/A	N/A
728	SUGAR MAPLE	12	MU	P	N	REMOVE	N/A	N/A	N/A	N/A
729	AMERICAN HOPHORNBEAM	12	S	F	N	REMOVE	N/A	N/A	N/A	N/A
730	DEAD	12	S	DEAD	N	REMOVE	N/A	N/A	N/A	N/A
731	SMOOTHBARK HICKORY	14	S	G	N	REMOVE	SIG	14	N/A	N/A
732	SHAGBARK HICKORY	10	S	G	N	REMOVE	N/A	N/A	N/A	N/A
733	RED OAK	18 10	S	F	N	REMOVE	N/A	N/A	N/A	N/A
734	RED OAK	20	S	G	N	REMOVE	SP	N/A	20	N/A
735	RED MAPLE	14	S	G	N	REMAIN	SIG	14	N/A	N/A
736	RED OAK	16	S	G	N	REMOVE	SIG	16	N/A	N/A
737	SHAGBARK HICKORY	10	S	G	N	REMOVE	N/A	N/A	N/A	N/A
738	RED OAK	14	S	G	N	REMOVE	SIG	14	N/A	N/A
739	WHITE OAK	12	S	G	N	REMOVE	N/A	N/A	N/A	N/A
740	WHITE OAK	16	S	G	N	REMOVE	SIG	16	N/A	N/A
741	SMOOTHBARK HICKORY	18	S	G	N	REMOVE	SIG	18	N/A	N/A
742	SHAGBARK HICKORY	18	S	G	N	REMAIN	SIG	18	N/A	N/A
743	SMOOTHBARK HICKORY	20	S	P	N	REMOVE	N/A	N/A	N/A	N/A
744	RED OAK	14	S	F	N	REMAIN	N/A	N/A	N/A	N/A
745	RED OAK	14	S	F	N	REMOVE	N/A	N/A	N/A	N/A
746	RED OAK	10	S	G	N	REMOVE	N/A	N/A	N/A	N/A
747	SHAGBARK HICKORY	12	S	F	N	REMOVE	N/A	N/A	N/A	N/A
748	WHITE OAK	10	S	P	N	REMOVE	N/A	N/A	N/A	N/A
749	RED OAK	22	S	G	N	REMOVE	SP	N/A	22	N/A
750	SHAGBARK HICKORY	12	S	G	N	REMOVE	N/A	N/A	N/A	N/A
751	SMOOTHBARK HICKORY	12	S	G	N	REMOVE	N/A	N/A	N/A	N/A
752	RED MAPLE	14	S	F	N	REMOVE	N/A	N/A	N/A	N/A
753	WHITE OAK	12	S	G	N	REMOVE	N/A	N/A	N/A	N/A
754	RED OAK	10	S	P	N	REMOVE	N/A	N/A	N/A	N/A
755	RED OAK	22	S	G	N	REMOVE	SP	N/A	22	N/A
756	WHITE OAK	14	S	G	N	REMOVE	SIG	14	N/A	N/A
757	WHITE OAK	16	S	G	N	REMOVE	SIG	16	N/A	N/A
758	WHITE OAK	10	S	F	N	REMOVE	N/A	N/A	N/A	N/A
759	WHITE OAK	18	S	G	N	REMOVE	SIG	18	N/A	N/A
760	RED OAK	20	S	G	N	REMAIN	SP	N/A	20	N/A
761	RED OAK	12	S	G	N	REMOVE	N/A	N/A	N/A	N/A
762	RED OAK	12	S	G	N	REMOVE	N/A	N/A	N/A	N/A
763	SMOOTHBARK HICKORY	14	S	G	N	REMOVE	SIG	14	N/A	N/A
764	WHITE ASH	10	S	P	N	REMOVE	N/A	N/A	N/A	N/A
765	NORWAY MAPLE	14	S	F	Y	REMOVE	N/A	N/A	N/A	N/A
766	DEAD	10	S	DEAD	N	REMOVE	N/A	N/A	N/A	N/A
767	DEAD	10	S	DEAD	N	REMOVE	N/A	N/A	N/A	N/A
768	RED OAK	18	S	G	N	REMOVE	SIG	18	N/A	N/A
769	RED OAK	12	S	G	N	REMOVE	N/A	N/A	N/A	N/A
770	SHAGBARK HICKORY	12	S	G	N	REMOVE	N/A	N/A	N/A	N/A
771	SMOOTHBARK HICKORY	12	S	G	N	REMOVE	N/A	N/A	N/A	N/A
772	RED OAK	14 10	S	G	N	REMOVE	SIG	14	N/A	N/A
773	SMOOTHBARK HICKORY	10	S	G	N	REMOVE	N/A	N/A	N/A	N/A
774	EASTERN COTTONWOOD	14	S	G	N	REMOVE	SIG	14	N/A	N/A
775	RED OAK	16	S	G	N	REMOVE	SIG	16	N/A	N/A
776	EASTERN COTTONWOOD	18	S	P	N	REMOVE	N/A	N/A	N/A	N/A
777	RED OAK	18	S	G	N	REMOVE	SIG	18	N/A	N/A
778	WHITE OAK	12	TW	G	N	REMOVE	N/A	N/A	N/A	N/A
779	RED OAK	18	S	G	N	REMOVE	SIG	18	N/A	N/A
780	RED OAK	16	S	G	N	REMOVE	SIG	16	N/A	N/A
781	RED OAK	22	S	G	N	REMOVE	SP	N/A	22	N/A
782	SASSAFRAS	12	S	P	N	REMOVE	N/A	N/A	N/A	N/A
783	SUGAR MAPLE	10	S	G	N	REMOVE	N/A	N/A	N/A	N/A
784	DEAD	12	S	DEAD	N	REMOVE	N/A	N/A	N/A	N/A
785	SUGAR MAPLE	14	S	G	N	REMOVE	SIG	14	N/A	N/A
786	SASSAFRAS	10	S	G	N	REMOVE	N/A	N/A	N/A	N/A
787	SASSAFRAS	10	S	G	N	REMOVE	N/A	N/A	N/A	N/A
788	SASSAFRAS	10	S	G	N	REMOVE	N/A	N/A	N/A	N/A
789	SASSAFRAS	10	S	G	N	REMOVE	N/A	N/A	N/A	N/A
790	SASSAFRAS	10	S	G	N	REMOVE	N/A	N/A	N/A	N/A
791	SASSAFRAS	10	S	G	N	REMOVE	N/A	N/A	N/A	N/A
792	SASSAFRAS	12	S	G	N	REMOVE	N/A	N/A	N/A	N/A
793	SASSAFRAS	10	S	G	N	REMOVE	N/A	N/A	N/A	N/A
794	SASSAFRAS	10	S	G	N	REMOVE	N/A	N/A	N/A	N/A
795	SASSAFRAS	14	S	G	N	REMOVE	SIG	14	N/A	N/A
796	SASSAFRAS	14	S	G	N	REMOVE	SIG	14	N/A	N/A
797	SASSAFRAS	10	S	G	N	REMOVE	N/A	N/A	N/A	N/A
798	SASSAFRAS	14	S	G	N	REMOVE	SIG	14	N/A	N/A
799	SASSAFRAS	16	S	G	N	REMOVE	SIG	16	N/A	N/A
800	SMOOTHBARK HICKORY	12	S	G	N	REMOVE	N/A	N/A	N/A	N/A
801	SMOOTHBARK HICKORY	10	S	G	N	REMOVE	N/A	N/A	N/A	N/A
802	RED MAPLE	12	S	G	N	REMOVE	N/A	N/A	N/A	N/A
803	RED MAPLE	10	S	G	N	REMOVE	N/A	N/A	N/A	N/A
804	RED OAK	20	S	G	N	REMOVE	SP	N/A	20	N/A
805	SUGAR MAPLE	10	TW	G	N	REMOVE	N/A	N/A	N/A	N/A
806	SMOOTHBARK HICKORY	10	S	G	N	REMOVE	N/A	N/A	N/A	N/A
807	WHITE OAK	12	S	F	N	REMOVE	N/A	N/A	N/A	N/A
808	RED MAPLE	12	S	G	N	REMOVE	N/A	N/A	N/A	N/A
809	SHAGBARK HICKORY	10	S	G	N	REMOVE	N/A	N/A	N/A	N/A
810	RED OAK	18	S	G	N	REMOVE	SIG	18	N/A	N/A
811	SMOOTHBARK HICKORY	16	S	G	N	REMOVE	SIG	16	N/A	N/A
812	RED OAK	12	S	G	N	REMOVE	N/A	N/A	N/A	N/A
813	RED OAK	18	S	G	N	REMOVE	SIG	18	N/A	N/A
814	SMOOTHBARK HICKORY	16	S	G	N	REMOVE	SIG	16	N/A	N/A
815	DEAD	10	TW	DEAD	N	REMOVE	N/A	N/A	N/A	N/A
816	SMOOTHBARK HICKORY	18	S	G	N	REMOVE	SIG	18	N/A	N/A
817	SUGAR MAPLE	10	S	G	N	REMOVE	N/A	N/A	N/A	N/A
818	RED OAK	22	S	G	N	REMOVE	SP	N/A	22	N/A
819	RED OAK	32	S	G	N	REMOVE	SP	N/A	32	N/A
820	RED MAPLE	16	S	G	N	REMOVE	SIG	16	N/A	N/A
821	DEAD	14	S	DEAD	N	REMOVE	N/A	N/A	N/A	N/A
822	SASSAFRAS	10	S	P	N	REMOVE	N/A	N/A	N/A	N/A

POINT #	COMMON NAME	DBH	STEMS	CONDITION	INVASIVE	STATUS	SIGNIFICANT /SPECIMEN/ PROTECTED	TOTAL CALIPER (SIGNIFICANT)	TOTAL CALIPER (SPECIMEN)	PROTECTED BIG TREE
823	SASSAFRAS	10	S	G	N	REMOVE	N/A	N/A	N/A	N/A
824	SASSAFRAS	10	S	G	N	REMOVE	N/A	N/A	N/A	N/A
825	SASSAFRAS	10	S	G	N	REMOVE	N/A	N/A	N/A	N/A
826	SASSAFRAS	10	S	G	N	REMOVE	N/A	N/A	N/A	N/A
827	SASSAFRAS	10	S	G	N	REMOVE	N/A	N/A	N/A	N/A
828	SASSAFRAS	10	S	G	N	REMOVE	N/A	N/A	N/A	N/A
829	SASSAFRAS	10	TW	G	N	REMOVE	N/A	N/A	N/A	N/A
830	SASSAFRAS	12	S	G	N	REMOVE	N/A	N/A	N/A	N/A
831	AMERICAN HOPHORNBEAM	12	S	G	N	REMOVE	N/A	N/A	N/A	N/A
832	SASSAFRAS	10	S	G	N	REMOVE	N/A	N/A	N/A	N/A
833	SASSAFRAS	12	S	G	N	REMOVE	N/A	N/A	N/A	N/A
834	SASSAFRAS	10	S	G	N	REMOVE	N/A	N/A	N/A	N/A
835	SASSAFRAS	10	S	G	N	REMOVE	N/A	N/A	N/A	N/A
836	SASSAFRAS	12	S	G	N	REMOVE	N/A	N/A	N/A	N/A
837	SASSAFRAS	10	S	G	N	REMOVE	N/A	N/A	N/A	N/A
838	SUGAR MAPLE	16	MU	G	N	REMOVE	SIG	64	N/A	N/A
839	SASSAFRAS	10	S	G	N	REMOVE	N/A	N/A	N/A	N/A
840	RED MAPLE	10	S	G	N	REMOVE	N/A	N/A	N/A	N/A
841	RED MAPLE	14	S	G	N	REMOVE	SIG	14	N/A	N/A
842	AMERICAN ELM	14 12	S	G	N	REMOVE	SIG	14	N/A	N/A
843	WHITE OAK	10	S	G	N	REMOVE	N/A	N/A	N/A	N/A
844	RED OAK	18	S	G	N	REMOVE	SIG	18	N/A	N/A
845	RED CEDAR	10	S	P	N	REMOVE	N/A	N/A	N/A	N/A
846	RED OAK	14	S	P	N	REMOVE	N/A	N/A	N/A	N/A
847	RED OAK	22	S	G	N	REMOVE	SP	N/A	22	N/A
848	BLACK CHERRY	10	TW	P	N	REMOVE	N/A	N/A	N/A	N/A
849	BLACK CHERRY	10	TW	P	N	REMOVE	N/A	N/A	N/A	N/A
850	WHITE OAK	12	S	P	N	REMOVE	N/A	N/A	N/A	N/A
851	RED OAK	22	S	P	N	REMOVE	N/A	N/A	N/A	N/A
852	WHITE OAK	28	S	G	N	REMOVE	SP	N/A	28	N/A
853	RED MAPLE	14 6	S	G	N	REMOVE	SIG	14	N/A	N/A
854	RED OAK	28	S	G	N	REMOVE	SP	N/A	28	N/A
855	RED OAK	14	S	G	N	REMOVE	SIG	14	N/A	N/A
856	SYCAMORE	12	S	G	N	REMOVE	N/A	N/A	N/A	N/A
857	SUGAR MAPLE	10	S	G	N	REMOVE	N/A	N/A	N/A	N/A
858	RED MAPLE	10	S	G	N	REMOVE	N/A	N/A	N/A	N/A
859	BLACK CHERRY	10	S	F	N	REMOVE	N/A	N/A	N/A	N/A
860	AMERICAN ELM	10	S	G	N	REMOVE	N/A	N/A	N/A	N/A
861	SUGAR MAPLE	14	MU	G	N	REMAIN	SIG	56	N/A	N/A
862	DEAD	10	S	DEAD	N	REMOVE	N/A	N/A	N/A	N/A
863	SMOOTHBARK HICKORY	18	S	G	N	REMOVE	SIG	18	N/A	N/A
864	BLACK CHERRY	10	TW	F	N	REMOVE	N/A	N/A	N/A	N/A
865	EASTERN COTTONWOOD	10	S	F	N	REMOVE	N/A	N/A	N/A	N/A
866	EASTERN COTTONWOOD	10	S	P	N	REMOVE	N/A	N/A	N/A	N/A
867	EASTERN COTTONWOOD	14	S	P	N	REMOVE	N/A	N/A	N/A	N/A
868	SUGAR MAPLE	12	MU	G	N	REMOVE	N/A	N/A	N/A	N/A
869	DEAD	14	S	DEAD	N	REMOVE	N/A	N/A	N/A	N/A
870	RED MAPLE	10	MU	G	N	REMOVE	N/A	N/A	N/A	N/A
871	RED MAPLE	14	MU	G	N	REMOVE	SIG	56	N/A	N/A
872	RED OAK	18	S	G	N	REMOVE	SIG	18	N/A	N/A
873	RED MAPLE	12	TW	G	N	REMOVE	N/A	N/A	N/A	N/A
874	WHITE ASH	10	S	P	N	REMOVE	N/A	N/A	N/A	N/A
875	SUGAR MAPLE	12	TW	P	N	REMOVE	N/A	N/A	N/A	N/A
876	SYCAMORE	10	TR	F	N	REMOVE	N/A	N/A	N/A	N/A
877	SUGAR MAPLE	12	MU	G	N	REMOVE	N/A	N/A	N/A	N/A
878	SUGAR MAPLE	12 10	S	P	N	REMOVE	N/A	N/A	N/A	N/A
879	AMERICAN ELM	20	S	G	N	REMOVE	SP	N/A	20	N/A
880	SUGAR MAPLE	10	S	G	N	REMOVE	N/A	N/A	N/A	N/A
881	SYCAMORE	16	S	G	N	REMOVE	SIG	16	N/A	N/A
882	SUGAR MAPLE	10	MU	G	N	REMOVE	N/A	N/A	N/A	N/A
883	RED MAPLE	10	S	P	N	REMOVE	N/A	N/A	N/A	N/A
884	RED MAPLE	16	MU	G	N	REMOVE	SIG	64	N/A	N/A
885	CRAB APPLE	10	S	P	N	REMOVE	N/A	N/A	N/A	N/A
886	DEAD	10	MU	DEAD	N	REMOVE	N/A	N/A	N/A	N/A
887	RED OAK	18	TR	G	N	REMOVE	SIG	54	N/A	N/A
888	SUGAR MAPLE	18 16	S	G	N	REMOVE	SIG	18	N/A	N/A
889	SUGAR MAPLE	12 10	MU	G	N	REMOVE	N/A	N/A	N/A	N/A
890	BLACK CHERRY	10	S	F	N	REMOVE	N/A	N/A	N/A	N/A
891	DEAD	14	S	DEAD	N	REMOVE	N/A	N/A	N/A	N/A
892	RED OAK	28	S	G	N	REMOVE	SP	N/A	28	N/A
893	SUGAR MAPLE	12	S	G	N	REMOVE	N/A	N/A	N/A	N/A
894	SUGAR MAPLE	10	S	F	N	REMOVE	N/A	N/A	N/A	N/A
895	RED MAPLE	14	S	G	N	REMOVE	SIG	14	N/A	N/A
896	SUGAR MAPLE	10	MU	F	N	REMOVE	N/A	N/A	N/A	N/A
897	RED MAPLE	10	TR	P	N	REMOVE	N/A	N/A	N/A	N/A
898	DEAD	10	S	DEAD	N	REMOVE	N/A	N/A	N/A	N/A
899	WHITE ASH	10	S	P	N	REMOVE	N/A	N/A	N/A	N/A
900	RED OAK	20	S	G	N	REMOVE	SP	N/A	20	N/A
901	SMOOTHBARK HICKORY	18	S	G	N	REMOVE	SIG	18	N/A	N/A
902	SHAGBARK HICKORY	12	S	G	N	REMOVE	N/A	N/A	N/A	N/A
903	RED OAK	10	S	G	N	REMOVE	N/A	N/A	N/A	N/A
904	SUGAR MAPLE	10	S	F	N	REMOVE	N/A	N/A	N/A	N/A
905	SHAGBARK HICKORY	10	S	G	N	REMAIN	N/A	N/A	N/A	N/A
906	DEAD	10	S	DEAD	N	REMOVE	N/A	N/A	N/A	N/A
907	WHITE OAK	12	S	G	N	REMOVE	N/A	N/A	N/A	N/A
908	SMOOTHBARK HICKORY	10	S	G	N	REMOVE	N/A	N/A	N/A	N/A
909	RED OAK	10	S	G	N	REMOVE	N/A	N/A	N/A	N/A
910	SMOOTHBARK HICKORY	16	S	G	N	REMOVE	SIG	16	N/A	N/A
911	SMOOTHBARK HICKORY	10	S	G	N	REMAIN	N/A	N/A	N/A	N/A
912	RED OAK	12	S	G	N	REMAIN	N/A	N/A	N/A	N/A
913	WHITE OAK	12	S	F	N	REMOVE	N/A	N/A	N/A	N/A
914	RED OAK	14	S	G	N	REMAIN	SIG	14	N/A	N/A
915	RED OAK	10	S	G	N	REMOVE	N/A	N/A	N/A	N/A
916	SASSAFRAS	12	S	G	N	REMOVE	N/A	N/A	N/A	N/A
917	SUGAR MAPLE	10	S	G	N	REMOVE	N/A	N/A	N/A	N/A
918	RED OAK	26	S	G	N	REMOVE	SP	N/A	26	N/A
919	RED OAK	22	S	G	N	REMOVE	SP	N/A	22	N/A
920	DEAD	14	S	DEAD	N	REMOVE	N/A	N/A	N/A	N/A
921	RED OAK	10	S	G	N	REMOVE	N/A	N/A	N/A	N/A
922	SMOOTHBARK HICKORY	12	S	G	N	REMOVE	N/A	N/A	N/A	N/A
923	WHITE OAK	10	S	G	N	REMOVE	N/A	N/A	N/A	N/A
924	RED OAK	10	S	F	N	REMOVE	N/A	N/A	N/A	N/A
925	SMOOTHBARK HICKORY	10	S	G	N	REMOVE	N/A	N/A	N/A	N/A
926	SMOOTHBARK HICKORY	10	S	G	N	REMAIN	N/A	N/A	N/A	N/A
927	WHITE OAK	10	S	G	N	REMAIN	N/A	N/A	N/A	N/A
928	AMERICAN BEECH	14	S	G	N	REMAIN	SIG	14	N/A	N/A
929	RED OAK	16	S	G	N	REMOVE	SIG	16	N/A	N/A
930	SMOOTHBARK HICKORY	10	S	G	N	REMOVE	N/A	N/A	N/A	N/A

POINT #	COMMON NAME	DBH	STEMS	CONDITION	INVASIVE	STATUS	SIGNIFICANT /SPECIMEN/ PROTECTED	TOTAL CALIPER (SIGNIFICANT)	TOTAL CALIPER (SPECIMEN)	PROTECTED BIG TREE
931	RED OAK	20	S	G	N	REMAIN	SP	N/A	20	N/A
932	WHITE OAK	10	S	G	N	REMOVE	N/A	N/A	N/A	N/A
933	AMERICAN BEECH	14	S	G	N	REMOVE	SIG	14	N/A	N/A
934	RED OAK	14	S	G	N	REMAIN	SIG	14	N/A	N/A
935	WHITE OAK	20	S	G	N	REMAIN	SP	N/A	20	N/A
936	AMERICAN BEECH	10	S	G	N	REMAIN	N/A	N/A	N/A	N/A
937	WHITE OAK	18	S	G	N	REMAIN	SIG	18	N/A	N/A
938	WHITE OAK	14	S	G	N	REMAIN	SIG	14	N/A	N/A
939	RED OAK	22	S	F	N	REMAIN	N/A	N/A	N/A	N/A
940	DEAD	14	S	DEAD	N	REMAIN	N/A	N/A	N/A	N/A
941	RED OAK	10	S	G	N	REMAIN	N/A	N/A	N/A	N/A
942	DEAD	10	S	DEAD	N	REMAIN	N/A	N/A	N/A	N/A
943	WHITE OAK	20	S	G	N	REMAIN	SP	N/A	20	N/A
944	AMERICAN BEECH	10	S	G	N	REMAIN	N/A	N/A	N/A	N/A
945	SHAGBARK HICKORY	10	S	G	N	REMAIN	N/A	N/A	N/A	N/A
946	RED OAK	28	S	G	N	REMOVE	SP	N/A	28	N/A
947	AMERICAN BEECH	10	S	G	N	REMOVE	N/A	N/A	N/A	N/A
948	RED OAK	12	S	G	N	REMOVE	N/A	N/A	N/A	N/A
949	AMERICAN BEECH	14	S	G	N	REMAIN	SIG	14	N/A	N/A
950	CHESTNUT OAK	12	S	G	N	REMAIN	N/A	N/A	N/A	N/A
951	SUGAR MAPLE	10	S	G	N	REMOVE	N/A	N/A	N/A	N/A
952	RED OAK	10	S	G	N	REMAIN	N/A	N/A	N/A	N/A
953	AMERICAN BEECH	12	S	G	N	REMAIN	N/A	N/A	N/A	N/A
954	AMERICAN BEECH	14	S	G	N	REMAIN	SIG	14	N/A	N/A
955	RED OAK	22	S	G	N	REMAIN	SP	N/A	22	N/A
956	SUGAR MAPLE	10	S	G	N	REMAIN	N/A	N/A	N/A	N/A
957	RED OAK	12	S	G	N	REMAIN	N/A	N/A	N/A	N/A
958	RED OAK	12	S	G	N	REMAIN	N/A	N/A	N/A	N/A
959	RED OAK	14	S	G	N	REMAIN	SIG	14	N/A	N/A
960	CHESTNUT OAK	12	S	G	N	REMAIN	N/A	N/A	N/A	N/A
961	RED OAK	14	S	G	N	REMAIN	SIG	14	N/A	N/A
962	RED OAK	14	S	G	N	REMAIN	SIG	14	N/A	N/A
963	RED OAK	12	S	G	N	REMAIN	N/A	N/A	N/A	N/A
964	RED OAK	12	S	G	N	REMAIN	N/A	N/A	N/A	N/A
965	RED OAK	12	S	G	N	REMAIN	N/A	N/A	N/A	N/A
967	RED OAK	10	S	G	N	REMAIN	N/A	N/A	N/A	N/A
968	RED OAK	12	S	G	N	REMAIN	N/A	N/A	N/A	N/A
969	RED OAK	12	S	G	N	REMAIN	N/A	N/A	N/A	N/A
970	RED OAK	10	S	G	N	REMAIN	N/A	N/A	N/A	N/A
971	RED OAK	18	S	G	N	REMAIN	SIG	18	N/A	N/A
972	CHESTNUT OAK	16	S	G	N	REMAIN	SIG	16	N/A	N/A
973	SMOOTHBARK HICKORY	16	S	G	N	REMOVE	SIG	16	N/A	N/A
974	CHESTNUT OAK	14	S	G	N	REMOVE	SIG	14	N/A	N/A
975	CHESTNUT OAK	14	S	G	N	REMOVE	SIG	14	N/A	N/A
976	SUGAR MAPLE	10	S	G	N	REMOVE	N/A	N/A	N/A	N/A
977	SMOOTHBARK HICKORY	12	TR	G	N	REMOVE	N/A	N/A	N/A	N/A
978	CHESTNUT OAK	12	S	G	N	REMOVE	N/A	N/A	N/A	N/A
979	SMOOTHBARK HICKORY	12	S	G	N	REMOVE	N/A	N/A	N/A	N/A
980	CHESTNUT OAK	12	S	G	N	REMOVE	N/A	N/A	N/A	N/A
981	CHESTNUT OAK	12	S	G	N	REMOVE	N/A	N/A	N/A	N/A
982	RED OAK	12	S	G	N	REMOVE	N/A	N/A	N/A	N/A
983	RED OAK	14	S	G	N	REMOVE	SIG	14	N/A	N/A
984	RED OAK	16	S	G	N	REMOVE	SIG	16	N/A	N/A
985	RED OAK	16	S	G	N	REMOVE	SIG	16	N/A	N/A
986	RED OAK	10	S	G	N	REMOVE	N/A	N/A	N/A	N/A
987	RED OAK	10	S	G	N	REMOVE	N/A	N/A	N/A	N/A
988	RED OAK	18	S	G	N	REMOVE	SIG	18	N/A	N/A
989	RED OAK	10	S	G	N	REMOVE	N/A	N/A	N/A	N/A
990	BLACK CHERRY	10	S	G	N	REMOVE	N/A	N/A	N/A	N/A
991	SMOOTHBARK HICKORY	10	S	G	N	REMOVE	N/A	N/A	N/A	N/A
992	SMOOTHBARK HICKORY	10	S	G	N	REMOVE	N/A	N/A	N/A	N/A
993	SMOOTHBARK HICKORY	10	TW	G	N	REMOVE	N/A	N/A	N/A	N/A
994	CHESTNUT OAK	10	S	F	N	REMOVE	N/A	N/A	N/A	N/A
995	RED OAK	10	S	G	N	REMOVE	N/A	N/A	N/A	N/A
996	SMOOTHBARK HICKORY	10	S	G	N	REMOVE	N/A	N/A	N/A	N/A
997	SMOOTHBARK HICKORY	14	S	G	N	REMOVE	SIG	14	N/A	N/A
998	SMOOTHBARK HICKORY	12	S	G	N	REMOVE	N/A	N/A	N/A	N/A
999	CHESTNUT OAK	10	S	G	N	REMOVE	N/A	N/A	N/A	N/A
1000	SMOOTHBARK HICKORY	18 10	S	G	N	REMOVE	SIG	18	N/A	N/A
2001	SUGAR MAPLE	36	S	G	N	REMOVE	SP	N/A	36	N/A
2002	WHITE ASH	12	S	G	N	REMOVE	N/A	N/A	N/A	N/A
2003	CRAB APPLE	10	TW	G	N	REMOVE	N/A	N/A	N/A	N/A
2004	CRAB APPLE	10	TW	G	N	REMOVE	N/A	N/A	N/A	N/A
2006	SUGAR MAPLE	30	S	G	N	REMOVE	SP	N/A	30	N/A
2007	SUGAR MAPLE	30	S	G	N	REMOVE	SP	N/A	30	N/A
2008	SUGAR MAPLE	24	S	G	N	REMOVE	SP	N/A	24	N/A
2009	WHITE ASH	10	S	G	N	REMOVE	N/A	N/A	N/A	N/A
2010	SUGAR MAPLE	24	S	F	N	REMOVE	N/A	N/A	N/A	N/A
2011	SUGAR MAPLE	32	S	G	N	REMOVE	SP	N/A	32	N/A
2012	AMERICAN ELM	12	S	G	N	REMOVE	N/A	N/A	N/A	N/A
2013	DEAD	18	S	DEAD	N	REMOVE	N/A	N/A	N/A	N/A
2014	SUGAR MAPLE	22	S	G	N	REMOVE	SP	N/A	22	N/A
2015	SUGAR MAPLE	30	S	G	N	REMOVE	SP	N/A	30	N/A
2016	SUGAR MAPLE	12	S	G	N	REMOVE	N/A	N/A	N/A	N/A
2017	SUGAR MAPLE	12	S	G	N	REMOVE	N/A	N/A	N/A	N/A
2018	SUGAR MAPLE	18	S	G	N	REMOVE	SIG	18	N/A	N/A
2019	SUGAR MAPLE	18	S	G	N	REMOVE	SIG	18	N/A	N/A
2020	SUGAR MAPLE	10	S	P	N	REMOVE	N/A	N/A	N/A	N/A
2021	SUGAR MAPLE	24	S	G	N	REMOVE	SP	N/A	24	N/A
2022	WHITE WALNUT	14	S	G	N	REMOVE	SIG	14	N/A	N/A
2023	EASTERN COTTONWOOD	10	S	G	N	REMOVE	N/A	N/A	N/A	N/A
2024	EASTERN COTTONWOOD	20	S	G	N	REMOVE	SP	N/A	20	N/A
2025	SUGAR MAPLE	16	S	G	N	REMOVE	SIG	16	N/A	N/A
2026	SUGAR MAPLE	24	S	G	N	REMOVE	SP	N/A	24	N/A
2027	SUGAR MAPLE	16	S	G	N	REMOVE	SIG	16	N/A	N/A
2028	SUGAR MAPLE	16	S	G	N	REMOVE	SIG	16	N/A	N/A
2029	BLACK CHERRY	10	S	P	N	REMOVE	N/A	N/A	N/A	N/A
2030	WHITE OAK	28	S	F	N	REMOVE	N/A	N/A	N/A	N/A
2031	DEAD	30	S	DEAD	N	REMOVE	N/A	N/A	N/A	N/A
2032	SUGAR MAPLE	14	S	G	N	REMOVE	SIG	14	N/A	N/A
2033	SUGAR MAPLE	14	S	G	N	REMOVE	SIG	14	N/A	N/A
2034	SUGAR MAPLE	14 10	S	G	N	REMOVE	SIG	14	N/A	N/A
2035	SUGAR MAPLE	12	S	G	N	REMOVE	N/A	N/A	N/A	N/A
2036	BLACK CHERRY	12	S	P	N	REMOVE	N/A	N/A	N/A	N/A
2037	SUGAR MAPLE	12	S	G	N	REMOVE	N/A	N/A	N/A	N/A
2038	SUGAR MAPLE	10	S	G	N	REMOVE	N/A	N/A	N/A	N/A
2039	DEAD	10	S	DEAD	N	REMOVE	N/A	N/A	N/A	N/A
2040	SUGAR MAPLE	14	S	G	N	REMOVE	SIG	14	N/A	N/A
2041	DEAD	10	S	DEAD	N	REMOVE	N/A	N/A	N/A	N/A

TREE CHART ABBREVIATIONS

DBH – DIAMETER BREAST HEIGHT
S – SINGLE STEM
TW – TWIN STEM
TR – TRIPLE STEM
MU – MULTI STEM
G – GOOD CONDITION
F – FAIR CONDITION
P – POOR CONDITION
C – CRITICAL CONDITION
Y – YES
N – NO
SP – SPECIMEN TREE
SIG – SIGNIFICANT TREE
PR – PROTECTED
N/A – NOT APPLICABLE

No.	Revision	Date	By
1.	REVISED PER PLANNING BOARD COMMENTS	06/19/2023	RFA

Previous Editions Obsolete

APPLICANT:
YM & YH DEVELOPERS LLC
1156 59TH STREET
BROOKLYN, NY 11219

JMC Planning, Engineering, Landscape Architecture & Land Surveying, PLLC
JMC Site Development Consultants, LLC
John Meyer Consulting, Inc.
120 BEDFORD ROAD • ARMONK, NY 10504
voice 914.273.5225 • fax 914.273.2102
www.jmcpllc.com

JMC

TREE LIST
FARRELL INDUSTRIAL PARK
ROUTE 300
TOWN OF NEWBURGH, NY

ANY ALTERATION OF PLANS, SPECIFICATIONS, PLATS AND REPORTS BEARING THE SEAL OF A LICENSED PROFESSIONAL ENGINEER OR LICENSED LAND SURVEYOR IS A VIOLATION OF ARTICLE 145 OF THE NEW YORK STATE EDUCATION LAW, EXCEPT AS PROVIDED FOR BY SECTION 7209, SUBSECTION 2.

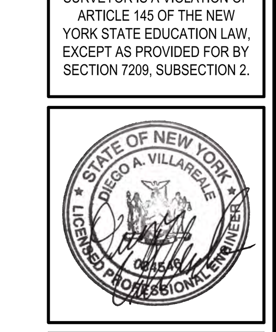

Drawn: TC Approved: DL/JS
Scale: N.T.S
Date: 04/19/2023
Project No: 22127
22127-TREE PLAN | C-022 | TREE.scr
Drawing No:
C-022

NOT FOR CONSTRUCTION
COPYRIGHT © 2021 by JMC All Rights Reserved. No part of this document may be reproduced, stored in a retrieval system, or transmitted in any form or by means, electronic, mechanical, photocopying, recording or otherwise, without the prior written permission of JMC PLANNING, ENGINEERING, LANDSCAPE ARCHITECTURE & LAND SURVEYING, PLLC | JMC SITE DEVELOPMENT CONSULTANTS, LLC | JOHN MEYER CONSULTING, INC. (JMC). Any modifications or alterations to this document without the written permission of JMC shall render them invalid and unusable.

OVERALL TREE LIST

POINT #	COMMON NAME	DBH	STEMS	CONDITION	INVASIVE	STATUS	SIGNIFICANT /SPECIMEN/ PROTECTED	TOTAL CALIPER (SIGNIFICANT)	TOTAL CALIPER (SPECIMEN)	PROTECTED BIG TREE
2042	SUGAR MAPLE	10	S	G	N	REMOVE	N/A	N/A	N/A	N/A
2043	SUGAR MAPLE	22	S	G	N	REMOVE	SP	N/A	22	N/A
2044	DEAD	14	S	DEAD	N	REMOVE	N/A	N/A	N/A	N/A
2045	WHITE ASH	24	S	F	N	REMOVE	N/A	N/A	N/A	N/A
2046	SUGAR MAPLE	10	S	G	N	REMOVE	N/A	N/A	N/A	N/A
2047	SUGAR MAPLE	20	S	G	N	REMOVE	SP	N/A	20	N/A
2048	SUGAR MAPLE	10	S	G	N	REMOVE	N/A	N/A	N/A	N/A
2049	SUGAR MAPLE	10	S	G	N	REMOVE	N/A	N/A	N/A	N/A
2050	SUGAR MAPLE	12	TW	G	N	REMOVE	N/A	N/A	N/A	N/A
2051	SUGAR MAPLE	12	TW	G	N	REMOVE	N/A	N/A	N/A	N/A
2052	SUGAR MAPLE	12	S	G	N	REMOVE	N/A	N/A	N/A	N/A
2053	SUGAR MAPLE	12	S	G	N	REMOVE	N/A	N/A	N/A	N/A
2054	SUGAR MAPLE	10	S	G	N	REMOVE	N/A	N/A	N/A	N/A
2055	WILD CHERRY	10	TW	G	N	REMOVE	N/A	N/A	N/A	N/A
2056	RED OAK	28	MU	F	N	REMOVE	N/A	N/A	N/A	N/A
2057	RED OAK	28	S	F	N	REMOVE	N/A	N/A	N/A	N/A
2058	WHITE OAK	12	S	G	N	REMOVE	N/A	N/A	N/A	N/A
2059	DEAD	10	S	DEAD	N	REMOVE	N/A	N/A	N/A	N/A
2060	RED OAK	28	S	G	N	REMOVE	SP	N/A	28	N/A
2061	SUGAR MAPLE	14 10	S	G	N	REMOVE	SIG	14	N/A	N/A
2062	SUGAR MAPLE	18	S	G	N	REMOVE	SIG	18	N/A	N/A
2063	SUGAR MAPLE	12	S	G	N	REMOVE	N/A	N/A	N/A	N/A
2064	SUGAR MAPLE	20	S	G	N	REMAIN	SP	N/A	20	N/A
2065	SUGAR MAPLE	14	S	G	N	REMAIN	SIG	14	N/A	N/A
2066	WHITE OAK	12 10	S	G	N	REMAIN	N/A	N/A	N/A	N/A
2067	AMERICAN ELM	14	S	G	N	REMAIN	SIG	14	N/A	N/A
2068	DEAD	10	TW	DEAD	N	REMOVE	N/A	N/A	N/A	N/A
2069	WHITE OAK	16 14	S	G	N	REMOVE	SIG	30	N/A	N/A
2070	WHITE BIRCH	14	S	G	N	REMOVE	SIG	14	N/A	N/A
2071	WHITE OAK	18	S	G	N	REMOVE	SIG	18	N/A	N/A
2072	WHITE OAK	14	S	G	N	REMOVE	SIG	14	N/A	N/A
2073	DEAD	14	S	DEAD	N	REMOVE	N/A	N/A	N/A	N/A
2074	BLACK WALNUT	20	S	G	N	REMAIN	SP	N/A	20	N/A
2075	WHITE OAK	12	S	G	N	REMAIN	N/A	N/A	N/A	N/A
2077	BLACK CHERRY	18 14	S	P	N	REMOVE	N/A	N/A	N/A	N/A
2078	SUGAR MAPLE	14	S	G	N	REMAIN	SIG	14	N/A	N/A
2079	RED OAK	16	S	G	N	REMAIN	SIG	16	N/A	N/A
2080	RED OAK	22	S	G	N	REMOVE	SP	N/A	22	N/A
2081	RED OAK	14	S	G	N	REMAIN	SIG	14	N/A	N/A
2082	SASSAFRAS	14	S	G	N	REMAIN	SIG	14	N/A	N/A
2083	SUGAR MAPLE	12	S	G	N	REMAIN	N/A	N/A	N/A	N/A
2084	SUGAR MAPLE	22	S	G	N	REMAIN	SP	N/A	22	N/A
2085	WHITE OAK	22	S	G	N	REMAIN	SP	N/A	22	N/A
2086	DEAD	10	S	DEAD	N	REMAIN	N/A	N/A	N/A	N/A
2087	SASSAFRAS	10	S	G	N	REMAIN	N/A	N/A	N/A	N/A
2088	RED OAK	24	S	G	N	REMAIN	SP	N/A	24	N/A
2089	WILD CHERRY	14	S	DEAD	N	REMOVE	N/A	N/A	N/A	N/A
2090	SUGAR MAPLE	22	S	G	N	REMAIN	SP	N/A	22	N/A
2091	SUGAR MAPLE	14	S	F	N	REMAIN	N/A	N/A	N/A	N/A
2092	SUGAR MAPLE	18	S	G	N	REMOVE	SIG	18	N/A	N/A
2093	SUGAR MAPLE	28	S	F	N	REMOVE	N/A	N/A	N/A	N/A
2094	DEAD	10	S	DEAD	N	REMOVE	N/A	N/A	N/A	N/A
2095	BLACK CHERRY	12	S	G	N	REMOVE	N/A	N/A	N/A	N/A
2096	SUGAR MAPLE	20	S	G	N	REMAIN	SP	N/A	20	N/A
2097	SMOOTHBARK HICKORY	12	S	G	N	REMOVE	N/A	N/A	N/A	N/A
2098	SUGAR MAPLE	20	S	G	N	REMOVE	SP	N/A	20	N/A
2099	AMERICAN ELM	12	S	P	N	REMOVE	N/A	N/A	N/A	N/A
2100	AMERICAN BEECH	24	S	P	N	REMOVE	N/A	N/A	N/A	N/A
2101	SUGAR MAPLE	16 14 12	S	G	N	REMOVE	SIG	30	N/A	N/A
2102	RED OAK	30	S	G	N	REMOVE	SP	N/A	30	N/A
2103	SUGAR MAPLE	10	TW	G	N	REMOVE	N/A	N/A	N/A	N/A
2104	DEAD	12	S	DEAD	N	REMOVE	N/A	N/A	N/A	N/A
2105	SUGAR MAPLE	18 10	S	P	N	REMOVE	N/A	N/A	N/A	N/A
2106	SUGAR MAPLE	10	TW	P	N	REMOVE	N/A	N/A	N/A	N/A
2107	DEAD	10	S	DEAD	N	REMOVE	N/A	N/A	N/A	N/A
2108	BLACK CHERRY	24	S	G	N	REMOVE	SP	N/A	24	N/A
2109	SUGAR MAPLE	18	S	G	N	REMOVE	SIG	18	N/A	N/A
2110	TREE OF HEAVEN	18	S	G	Y	REMOVE	N/A	N/A	N/A	N/A
2111	TREE OF HEAVEN	10	S	G	Y	REMOVE	N/A	N/A	N/A	N/A
2112	SUGAR MAPLE	14	S	G	N	REMOVE	SIG	14	N/A	N/A
2113	SUGAR MAPLE	10	S	G	N	REMOVE	N/A	N/A	N/A	N/A
2114	SUGAR MAPLE	10	MU	G	N	REMOVE	N/A	N/A	N/A	N/A
2115	EASTERN COTTONWOOD	24	S	G	N	REMOVE	SP	N/A	24	N/A
2116	WHITE WALNUT	12	S	G	N	REMOVE	N/A	N/A	N/A	N/A
2117	SUGAR MAPLE	14	S	G	N	REMOVE	SIG	14	N/A	N/A
2118	SUGAR MAPLE	16	S	G	N	REMOVE	SIG	16	N/A	N/A
2119	RED OAK	10	S	G	N	REMAIN	N/A	N/A	N/A	N/A
2120	HONEY LOCUST	12	S	G	N	REMOVE	N/A	N/A	N/A	N/A
2121	SUGAR MAPLE	12	S	G	N	REMAIN	N/A	N/A	N/A	N/A
2122	HONEY LOCUST	12	S	G	N	REMOVE	N/A	N/A	N/A	N/A
2123	RED OAK	22	S	G	N	REMOVE	SP	N/A	22	N/A
2124	WILD CHERRY	10	TW	G	N	REMOVE	N/A	N/A	N/A	N/A
2125	DEAD	10	S	DEAD	N	REMOVE	N/A	N/A	N/A	N/A
2126	SUGAR MAPLE	10	S	G	N	REMOVE	N/A	N/A	N/A	N/A
2127	SUGAR MAPLE	14	S	G	N	REMOVE	SIG	14	N/A	N/A
2128	WILD CHERRY	10	S	G	N	REMOVE	N/A	N/A	N/A	N/A
2129	SUGAR MAPLE	16	S	G	N	REMOVE	SIG	16	N/A	N/A
2130	SUGAR MAPLE	14	S	G	N	REMOVE	SIG	14	N/A	N/A
2131	SUGAR MAPLE	16 12 10	S	G	N	REMOVE	SIG	16	N/A	N/A
2132	RED OAK	10	S	G	N	REMOVE	N/A	N/A	N/A	N/A
2133	DEAD	10	S	DEAD	N	REMOVE	N/A	N/A	N/A	N/A
2134	WHITE OAK	10	S	P	N	REMOVE	N/A	N/A	N/A	N/A
2135	WHITE OAK	12 10	S	P	N	REMOVE	N/A	N/A	N/A	N/A
2136	RED OAK	36	S	G	N	REMOVE	SP	N/A	36	N/A
2137	SASSAFRAS	10	S	G	N	REMOVE	N/A	N/A	N/A	N/A
2138	SMOOTHBARK HICKORY	14	S	G	N	REMOVE	SIG	14	N/A	N/A
2139	RED OAK	16	S	G	N	REMOVE	SIG	16	N/A	N/A
2140	RED OAK	22 10	S	G	N	REMOVE	SP	N/A	22	N/A
2141	RED OAK	24	S	G	N	REMOVE	SP	N/A	24	N/A
2142	SMOOTHBARK HICKORY	16	S	G	N	REMOVE	SIG	16	N/A	N/A
2143	BLACK CHERRY	10	S	P	N	REMOVE	N/A	N/A	N/A	N/A
2144	SUGAR MAPLE	10	S	G	N	REMOVE	N/A	N/A	N/A	N/A
2145	SASSAFRAS	10	S	G	N	REMOVE	N/A	N/A	N/A	N/A
2146	SASSAFRAS	10	S	G	N	REMOVE	N/A	N/A	N/A	N/A
2147	TREE OF HEAVEN	10	TW	G	Y	REMOVE	N/A	N/A	N/A	N/A
2148	RED OAK	24	TR	G	N	REMOVE	SP	N/A	24	N/A
2149	DEAD	14	S	DEAD	N	REMOVE	N/A	N/A	N/A	N/A
2150	SUGAR MAPLE	10	TR	G	N	REMOVE	N/A	N/A	N/A	N/A
2151	BLACK CHERRY	16	S	F	N	REMOVE	N/A	N/A	N/A	N/A
2152	SUGAR MAPLE	14	S	G	N	REMOVE	SIG	14	N/A	N/A
2153	SUGAR MAPLE	12	S	G	N	REMOVE	N/A	N/A	N/A	N/A
2154	SUGAR MAPLE	10	S	G	N	REMOVE	N/A	N/A	N/A	N/A
2155	SUGAR MAPLE	10	S	G	N	REMOVE	N/A	N/A	N/A	N/A
2156	SUGAR MAPLE	12	S	G	N	REMOVE	N/A	N/A	N/A	N/A
2157	SUGAR MAPLE	14	S	G	N	REMOVE	SIG	14	N/A	N/A
2158	SUGAR MAPLE	14	S	G	N	REMOVE	SIG	14	N/A	N/A
2159	AMERICAN ELM	16	S	G	N	REMOVE	SIG	16	N/A	N/A
2160	TREE OF HEAVEN	12	S	G	Y	REMOVE	N/A	N/A	N/A	N/A
2161	TREE OF HEAVEN	14	S	G	Y	REMOVE	N/A	N/A	N/A	N/A
2162	TREE OF HEAVEN	20	S	G	Y	REMOVE	N/A	N/A	N/A	N/A
2163	WHITE WALNUT	10	S	G	N	REMOVE	N/A	N/A	N/A	N/A
2164	SMOOTHBARK HICKORY	20	S	G	N	REMOVE	SP	N/A	20	N/A
2165	SMOOTHBARK HICKORY	16	S	G	N	REMOVE	SIG	16	N/A	N/A
2166	SUGAR MAPLE	20 16	S	G	N	REMOVE	SP/SIG	16	20	N/A
2167	SUGAR MAPLE	10	S	G	N	REMOVE	N/A	N/A	N/A	N/A
2168	SUGAR MAPLE	16	S	G	N	REMOVE	SIG	16	N/A	N/A
2169	EASTERN COTTONWOOD	12	TW	P	N	REMOVE	N/A	N/A	N/A	N/A
2170	WHITE ASH	10	S	G	N	REMOVE	N/A	N/A	N/A	N/A
2171	BLACK CHERRY	16	S	F	N	REMOVE	N/A	N/A	N/A	N/A
2172	WHITE OAK	24	S	G	N	REMOVE	SP	N/A	24	N/A
2173	SUGAR MAPLE	10	TW	G	N	REMOVE	N/A	N/A	N/A	N/A
2174	SUGAR MAPLE	12	S	G	N	REMOVE	N/A	N/A	N/A	N/A
2175	RED OAK	24	S	G	N	REMOVE	SP	N/A	24	N/A
2176	SUGAR MAPLE	14	S	G	N	REMOVE	SIG	14	N/A	N/A
2177	TREE OF HEAVEN	26	S	G	Y	REMOVE	N/A	N/A	N/A	N/A
2178	TREE OF HEAVEN	30	S	G	Y	REMOVE	N/A	N/A	N/A	N/A
2179	WHITE ASH	10	S	F	N	REMOVE	N/A	N/A	N/A	N/A
2180	WHITE ASH	10	S	G	N	REMOVE	N/A	N/A	N/A	N/A
2181	DEAD	10	S	DEAD	N	REMOVE	N/A	N/A	N/A	N/A
2182	RED OAK	10	S	G	N	REMOVE	N/A	N/A	N/A	N/A
2183	SUGAR MAPLE	38	S	G	N	REMOVE	SP	N/A	38	N/A
2184	BLACK WALNUT	10	S	G	N	REMOVE	N/A	N/A	N/A	N/A
2185	WHITE WALNUT	10	S	G	N	REMOVE	N/A	N/A	N/A	N/A
2186	SUGAR MAPLE	14	S	G	N	REMOVE	SIG	14	N/A	N/A
2187	AMERICAN ELM	10	S	G	N	REMOVE	N/A	N/A	N/A	N/A
2188	WHITE WALNUT	12	S	G	N	REMOVE	N/A	N/A	N/A	N/A
2189	RED OAK	12	S	G	N	REMOVE	N/A	N/A	N/A	N/A
2190	RED OAK	14	S	G	N	REMOVE	SIG	14	N/A	N/A
2191	SMOOTHBARK HICKORY	10	TW	G	N	REMOVE	N/A	N/A	N/A	N/A
2192	SUGAR MAPLE	10	S	G	N	REMOVE	N/A	N/A	N/A	N/A
2193	SUGAR MAPLE	10	S	G	N	REMOVE	N/A	N/A	N/A	N/A
2194	RED OAK	16	S	G	N	REMOVE	SIG	16	N/A	N/A
2195	RED OAK	14	S	G	N	REMOVE	SIG	14	N/A	N/A
2196	WILD CHERRY	10	S	F	N	REMOVE	N/A	N/A	N/A	N/A
2197	RED OAK	12	S	P	N	REMOVE	N/A	N/A	N/A	N/A
2198	RED OAK	16	S	G	N	REMOVE	SIG	16	N/A	N/A
2199	DEAD	10	TW	DEAD	N	REMOVE	N/A	N/A	N/A	N/A
2200	RED CEDAR	14	S	G	N	REMOVE	SIG	14	N/A	N/A
2201	BLACK CHERRY	10	S	P	N	REMOVE	N/A	N/A	N/A	N/A
2202	RED CEDAR	12	S	G	N	REMOVE	SIG	12	N/A	N/A
2203	RED CEDAR	12	S	G	N	REMOVE	SIG	12	N/A	N/A
2204	BLACK CHERRY	10	S	F	N	REMOVE	N/A	N/A	N/A	N/A
2205	BLACK WALNUT	10	S	G	N	REMOVE	N/A	N/A	N/A	N/A
2206	BLACK LOCUST	10	S	G	Y	REMOVE	N/A	N/A	N/A	N/A
2207	TREE OF HEAVEN	10	S	G	Y	REMOVE	N/A	N/A	N/A	N/A
2208	NORTHERN CATULPA	10	S	G	N	REMOVE	N/A	N/A	N/A	N/A
2209	NORTHERN CATULPA	18	S	G	N	REMOVE	SIG	18	N/A	N/A
2210	SHAGBARK HICKORY	12	S	G	N	REMOVE	N/A	N/A	N/A	N/A
2211	SMOOTHBARK HICKORY	18	S	G	N	REMOVE	SIG	18	N/A	N/A
2212	DEAD	18	S	DEAD	N	REMOVE	N/A	N/A	N/A	N/A
2213	DEAD	10	S	DEAD	N	REMOVE	N/A	N/A	N/A	N/A
2214	SUGAR MAPLE	18	TW	G	N	REMOVE	SIG	36	N/A	N/A
2215	RED OAK	10	S	G	N	REMOVE	N/A	N/A	N/A	N/A
2216	BLACK OAK	10	S	G	N	REMOVE	N/A	N/A	N/A	N/A
2217	BLACK OAK	14	S	G	N	REMOVE	SIG	14	N/A	N/A
2218	DEAD	10	TW	DEAD	N	REMOVE	N/A	N/A	N/A	N/A
2219	BLACK OAK	22	S	P	N	REMOVE	N/A	N/A	N/A	N/A
2220	BLACK OAK	16	S	G	N	REMOVE	SIG	16	N/A	N/A
2221	WHITE ASH	10	S	F	N	REMOVE	N/A	N/A	N/A	N/A
2222	BLACK OAK	16	S	G	N	REMOVE	SIG	16	N/A	N/A
2223	BLACK OAK	20	S	G	N	REMOVE	SP	N/A	20	N/A
2224	BLACK OAK	18	S	G	N	REMOVE	SIG	18	N/A	N/A
2225	EASTERN COTTONWOOD	10	S	G	N	REMOVE	N/A	N/A	N/A	N/A
2226	BLACK OAK	14	S	G	N	REMOVE	SIG	14	N/A	N/A
2227	BLACK OAK	22	S	G	N	REMOVE	SP	N/A	22	N/A
2228	DEAD	12	S	DEAD	N	REMOVE	N/A	N/A	N/A	N/A
2229	RED CEDAR	12	S	G	N	REMOVE	SIG	12	N/A	N/A
2230	BLACK CHERRY	10	S	P	N	REMOVE	N/A	N/A	N/A	N/A
2231	BLACK CHERRY	10	S	F	N	REMOVE	N/A	N/A	N/A	N/A
2232	BLACK OAK	20	S	G	N	REMOVE	SP	N/A	20	N/A
2233	WHITE ASH	16	S	F	N	REMOVE	N/A	N/A	N/A	N/A
2234	SUGAR MAPLE	16	S	G	N	REMOVE	SIG	16	N/A	N/A
2235	DEAD	10	S	DEAD	N	REMOVE	N/A	N/A	N/A	N/A
2236	SUGAR MAPLE	10	S	G	N	REMOVE	N/A	N/A	N/A	N/A
2237	HONEY LOCUST	16	S	G	N	REMOVE	SIG	16	N/A	N/A
2238	HONEY LOCUST	10	S	P	N	REMOVE	N/A	N/A	N/A	N/A
2239	HONEY LOCUST	10	S	G	N	REMOVE	N/A	N/A	N/A	N/A
2240	AMERICAN ELM	10	S	G	N	REMOVE	N/A	N/A	N/A	N/A
2241	EASTERN COTTONWOOD	22	S	G	N	REMOVE	SP	N/A	22	N/A
2242	HONEY LOCUST	14	S	G	N	REMOVE	SIG	14	N/A	N/A
2243	HONEY LOCUST	10	S	G	N	REMOVE	N/A	N/A	N/A	N/A
2244	BLACK CHERRY	14	S	F	N	REMOVE	N/A	N/A	N/A	N/A
2245	DEAD	10	S	DEAD	N	REMOVE	N/A	N/A	N/A	N/A
2246	HONEY LOCUST	12	S	F	N	REMOVE	N/A	N/A	N/A	N/A
2247	HONEY LOCUST	12	S	G	N	REMOVE	N/A	N/A	N/A	N/A
2248	DEAD	10	S	DEAD	N	REMOVE	N/A	N/A	N/A	N/A
2249	HONEY LOCUST	14	S	F	N	REMOVE	N/A	N/A	N/A	N/A
2250	SUGAR MAPLE	10	S	G	N	REMOVE	N/A	N/A	N/A	N/A
2251	HONEY LOCUST	16	S	G	N	REMOVE	SIG	16	N/A	N/A
2252	WHITE OAK	16	S	G	N	REMAIN	SIG	16	N/A	N/A
2253	WHITE OAK	12	S	G	N	REMAIN	N/A	N/A	N/A	N/A
2254	WHITE OAK	18	S	G	N	REMAIN	SIG	18	N/A	N/A
2255	RED OAK	22	S	G	N	REMAIN	SP	N/A	22	N/A
2256	SUGAR MAPLE	10	S	G	N	REMAIN	N/A	N/A	N/A	N/A
2257	SUGAR MAPLE	16	S	G	N	REMAIN	SIG	16	N/A	N/A
2258	WHITE OAK	16	S	G	N	REMAIN	SIG	16	N/A	N/A
2259	WHITE ASH	22	S	G	N	REMAIN	SP	N/A	22	N/A
2260	SUGAR MAPLE	12	S	G	N	REMAIN	N/A	N/A	N/A	N/A
2261	SUGAR MAPLE	16	S	G	N	REMAIN	SIG	16	N/A	N/A
2262	SUGAR MAPLE	14	S	G	N	REMAIN	SIG	14	N/A	N/A
2263	WHITE ASH	10	S	G	N	REMOVE	N/A	N/A	N/A	N/A
2264	SUGAR MAPLE	12	S	G	N	REMOVE	N/A	N/A	N/A	N/A
2265	WHITE OAK	16	S	G	N	REMOVE	SIG	16	N/A	N/A
2266	BLACK OAK	14	S	G	N	REMOVE	SIG	14	N/A	N/A
2267	SUGAR MAPLE	28	S	G	N	REMOVE	SP	N/A	28	N/A
2268	RED OAK	16	S	P	N	REMOVE	N/A	N/A	N/A	N/A
2269	AMERICAN BEECH	12	S	G	N	REMAIN	N/A	N/A	N/A	N/A
2270	SUGAR MAPLE	10	S	G	N	REMAIN	N/A	N/A	N/A	N/A
2271	DEAD	10	S	DEAD	N	REMAIN	N/A	N/A	N/A	N/A
2272	EASTERN HEMLOCK	12 4	S	G	N	REMAIN	SIG	12	N/A	N/A
2273	EASTERN HEMLOCK	10	S	G	N	REMAIN	SIG	N/A	N/A	N/A
2274	SUGAR MAPLE	20	S	P	N	REMAIN	N/A	N/A	N/A	N/A
2275	EASTERN HEMLOCK	14	S	G	N	REMAIN	SIG	14	N/A	N/A
2276	SUGAR MAPLE	20	S	G	N	REMAIN	SP	N/A	20	N/A
2277	EASTERN HEMLOCK	14	S	G	N	REMAIN	SIG	14	N/A	N/A
2278	SUGAR MAPLE	16	S	P	N	REMAIN	N/A	N/A	N/A	N/A
2279	DEAD	20	S	DEAD	N	REMAIN	N/A	N/A	N/A	N/A
2280	WHITE OAK	12	S	F	N	REMAIN	N/A	N/A	N/A	N/A
2281	RED OAK	20	S	G	N	REMAIN	SP	N/A	20	N/A
2282	WHITE OAK	14	S	G	N	REMAIN	SIG	14	N/A	N/A
2283	SUGAR MAPLE	16	S	G	N	REMAIN	SIG	16	N/A	N/A
2284	SUGAR MAPLE	20	S	F	N	REMAIN	N/A	N/A	N/A	N/A
2285	SUGAR MAPLE	14	S	G	N	REMAIN	SIG	14	N/A	N/A
2286	SUGAR MAPLE	10	S	P	N	REMAIN	N/A	N/A	N/A	N/A
2287	SUGAR MAPLE	10	S	G	N	REMAIN	N/A	N/A	N/A	N/A
2288	AMERICAN BEECH	20 8	TW	G	N	REMAIN	SP	N/A	20	N/A
2289	DEAD	20	S	DEAD	N	REMAIN	N/A	N/A	N/A	N/A
2290	SUGAR MAPLE	14	S	G	N	REMAIN	SIG	14	N/A	N/A
2291	SUGAR MAPLE	16	S	G	N	REMAIN	SIG	16	N/A	N/A
2292	RED OAK	18	S	G	N	REMAIN	SIG	18	N/A	N/A
2293	WHITE OAK	16	S	G	N	REMAIN	SIG	16	N/A	N/A
2294	DEAD	12	S	DEAD	N	REMAIN	N/A	N/A	N/A	N/A
2295	EASTERN HEMLOCK	22	S	G	N	REMAIN	SP	N/A	22	N/A
2296	SUGAR MAPLE	14	S	F	N	REMAIN	N/A	N/A	N/A	N/A
2297	SUGAR MAPLE	16	S	G	N	REMAIN	SIG	16	N/A	N/A
2298	SUGAR MAPLE	10	S	G	N	REMAIN	N/A	N/A	N/A	N/A
2299	RED OAK	30	S	G	N	REMAIN	SP	N/A	30	N/A
2300	SUGAR MAPLE	18	S	G	N	REMAIN	SIG	18	N/A	N/A
2301	SHAGBARK HICKORY	10	S	G	N	REMAIN	N/A	N/A	N/A	N/A
2302	WHITE OAK	18	S	G	N	REMAIN	SIG	18	N/A	N/A
2303	RED OAK	28	S	G	N	REMAIN	SP	N/A	28	N/A
2304	SHAGBARK HICKORY	14	S	G	N	REMAIN	SIG	14	N/A	N/A
2305	SUGAR MAPLE	26	S	G	N	REMAIN	SP	N/A	26	N/A
2306	RED OAK	16	S	G	N	REMAIN	SIG	16	N/A	N/A
2307	RED OAK	16	S	G	N	REMAIN	SIG	16	N/A	N/A
2308	RED OAK	20	S	G	N	REMAIN	SP	N/A	20	N/A
2309	RED OAK	18	S	G	N	REMAIN	SIG	18	N/A	N/A
2310	RED OAK	16	S	G	N	REMAIN	SIG	16	N/A	N/A
2311	RED OAK	16	S	G	N	REMAIN	SIG	16	N/A	N/A
2312	WHITE OAK	20	S	G	N	REMAIN	SP	N/A	20	N/A
2313	WHITE OAK	18	S	G	N	REMAIN	SIG	18	N/A	N/A
2314	RED OAK	30	S	G	N	REMAIN	SP	N/A	30	N/A
2315	EASTERN HEMLOCK	14	S	G	N	REMAIN	SIG	14	N/A	N/A
2316	RED OAK	10	S	P	N	REMAIN	N/A	N/A	N/A	N/A
2317	EASTERN HEMLOCK	28	S	G	N	REMAIN	PR	N/A	28	Y
2318	DEAD	12	S	DEAD	N	REMAIN	N/A	N/A	N/A	N/A
2319	RED OAK	16	S	G	N	REMAIN	SIG	16	N/A	N/A
2320	SUGAR MAPLE	16	S	G	N	REMAIN	SIG	16	N/A	N/A
2321	AMERICAN BEECH	20	S	G	N	REMAIN	SP	N/A	20	N/A
2322	RED OAK	14	S	G	N	REMAIN	SIG	14	N/A	N/A
2323	DEAD	20	S	DEAD	N	REMAIN	N/A	N/A	N/A	N/A
2324	SUGAR MAPLE	12 6	TW	G	N	REMAIN	N/A	N/A	N/A	N/A
2325	SUGAR MAPLE	10	S	G	N	REMAIN	N/A	N/A	N/A	N/A
2326	RED OAK	18	S	G	N	REMAIN	SIG	18	N/A	N/A
2327	RED OAK	20 14	TW	G	N	REMAIN	SP	N/A	20	N/A
2328	RED OAK	16	S	G	N	REMAIN	SIG	16	N/A	N/A
2329	RED OAK	32	S	G	N	REMAIN	SP	N/A	32	N/A
2330	RED OAK	20	S	G	N	REMAIN	SP	N/A	20	N/A
2331	SUGAR MAPLE	12	S	G	N	REMAIN	N/A	N/A	N/A	N/A
2332	SUGAR MAPLE	14	S	G	N	REMAIN	SIG	14	N/A	N/A
2333	WHITE ASH	18	S	G	N	REMAIN	SIG	18	N/A	N/A
2334	WHITE OAK	14	S	G	N	REMAIN	SIG	14	N/A	N/A
2335	SUGAR MAPLE	10	S	G	N	REMAIN	N/A	N/A	N/A	N/A
2336	SUGAR MAPLE	16	TW	G	N	REMAIN	SIG	32	N/A	N/A
2337	SUGAR MAPLE	14	S	G	N	REMAIN	SIG	14	N/A	N/A
2338	SUGAR MAPLE	18	S	G	N	REMAIN	SIG	18	N/A	N/A
2339	SUGAR MAPLE	14	S	P	N	REMAIN	N/A	N/A	N/A	N/A
2340	RED OAK	18	S	G	N	REMAIN	SIG	18	N/A	N/A
2341	SUGAR MAPLE	14	S	G	N	REMAIN	SIG	14	N/A	N/A
2342	SHAGBARK HICKORY	14	S	G	N	REMAIN	SIG	14	N/A	N/A
2343	SUGAR MAPLE	12	S	G	N	REMAIN	N/A	N/A	N/A	N/A
2344	SHAGBARK HICKORY	18	S	G	N	REMOVE	SIG	18	N/A	N/A
2345	SUGAR MAPLE	10	S	G	N	REMAIN	N/A	N/A	N/A	N/A
2346	SUGAR MAPLE	10	S	G	N	REMAIN	N/A	N/A	N/A	N/A
2347	DEAD	18	S	DEAD	N	REMOVE	N/A	N/A	N/A	N/A
2348	RED OAK	22	S	G	N	REMAIN	SP	N/A	22	N/A
2349	SUGAR MAPLE	16	S	G	N	REMAIN	SIG	16	N/A	N/A
2350	WHITE ASH	14	S	P	N	REMOVE	N/A	N/A	N/A	N/A
2351	SUGAR MAPLE	12	S	G	N	REMAIN	N/A	N/A	N/A	N/A
2352	SUGAR MAPLE	10	S	G	N	REMAIN	N/A	N/A	N/A	N/A
2353	SUGAR MAPLE	10	S	G	N	REMAIN	N/A	N/A	N/A	N/A
2354	AMERICAN BEECH	10	S	P	N	REMOVE	N/A	N/A	N/A	N/A
2355	SUGAR MAPLE	10	S	G	N	REMOVE	N/A	N/A	N/A	N/A
2356	SUGAR MAPLE	16	S	G	N	REMOVE	SIG	16	N/A	N/A
2357	AMERICAN BEECH	10	S	G	N	REMAIN	N/A	N/A	N/A	N/A
2358	RED OAK	10	S	G	N	REMAIN	N/A	N/A	N/A	N/A
2359	RED OAK	20	S	G	N	REMOVE	SP	N/A	20	N/A
2360	RED OAK	16	S	G	N	REMOVE	SIG	16	N/A	N/A
2361	SUGAR MAPLE	14	S	G	N	REMOVE	SIG	14	N/A	N/A
2362	WHITE ASH	18	S	G	N	REMOVE	SIG	18	N/A	N/A
2363	SUGAR MAPLE	14	S	G	N	REMOVE	SIG	14	N/A	N/A
2364	WHITE OAK	22	S	G	N	REMOVE	SP	N/A	22	N/A
2365	SUGAR MAPLE	10	S	G	N	REMOVE	N/A	N/A	N/A	N/A
2366	SUGAR MAPLE	18 14	TW	G	N	REMOVE	SIG	32	N/A	N/A
2367	RED OAK	14	S	G	N	REMOVE	SIG	14	N/A	N/A
2368	SUGAR MAPLE	10	S	G	N	REMAIN	N/A	N/A	N/A	N/A
2369	SUGAR MAPLE	10	S	G	N	REMOVE	N/A	N/A	N/A	N/A
2370	DEAD	20	S	DEAD	N	REMOVE	N/A	N/A	N/A	N/A
2371	AMERICAN BEECH	18	S	G	N	REMOVE	SIG	18	N/A	N/A
2372	AMERICAN BEECH	16	S	G	N	REMOVE	SIG	16	N/A	N/A
2373	SUGAR MAPLE	20 8	TW	G	N	REMOVE	SP	N/A	20	N/A
2374	AMERICAN BEECH	16	S	G	N	REMOVE	SIG	16	N/A	N/A
2375	DEAD	20	S	DEAD	N	REMOVE	N/A	N/A	N/A	N/A
2376	AMERICAN BEECH	14	S	G	N	REMOVE	SIG	14	N/A	N/A
2377	RED OAK	20	S	G	N	REMOVE	SP	N/A	20	N/A
2378	SUGAR MAPLE	22	S	G	N	REMOVE	SP	N/A	22	N/A

TREE CHART ABBREVIATIONS

DBH – DIAMETER BREAST HEIGHT
S – SINGLE STEM
TW – TWIN STEM
TR – TRIPLE STEM
MU – MULTI STEM
G – GOOD CONDITION
F – FAIR CONDITION
P – POOR CONDITION
C – CRITICAL CONDITION
Y – YES
N – NO
SP – SPECIMEN TREE
SIG – SIGNIFICANT TREE
PR – PROTECTED
N/A – NOT APPLICABLE

No.	Revision	Date	By
1.	REVISED PER PLANNING BOARD COMMENTS	06/19/2023	RFA

Previous Editions Obsolete

APPLICANT:
YM & YH DEVELOPERS LLC
1156 59TH STREET
BROOKLYN, NY 11219

JMC Planning, Engineering, Landscape Architecture & Land Surveying, PLLC
JMC Site Development Consultants, LLC
John Meyer Consulting, Inc.
120 BEDFORD ROAD • ARMONK, NY 10504
voice 914.273.5225 • fax 914.273.2102
www.jmcpllc.com

TREE LIST
FARRELL INDUSTRIAL PARK
ROUTE 300
TOWN OF NEWBURGH, NY

ANY ALTERATION OF PLANS, SPECIFICATIONS, PLATS AND REPORTS BEARING THE SEAL OF A LICENSED PROFESSIONAL ENGINEER OR LICENSED LAND SURVEYOR IS A VIOLATION OF ARTICLE 145 OF THE NEW YORK STATE EDUCATION LAW, EXCEPT AS PROVIDED FOR BY SECTION 7209, SUBSECTION 2.

STATE OF NEW YORK · DIEGO A. VILLAREALE · LICENSED PROFESSIONAL ENGINEER

Drawn: TC Approved: DL/JS
Scale: N.T.S
Date: 04/19/2023
Project No: 22127
22127-TREE PLAN | C-023 | LAY.scr
Drawing No: C-023

COPYRIGHT © 2021 by JMC All Rights Reserved. No part of this document may be reproduced, stored in a retrieval system, or transmitted in any form or by means, electronic, mechanical, photocopying, recording or otherwise, without the prior written permission of JMC PLANNING, ENGINEERING, LANDSCAPE ARCHITECTURE & LAND SURVEYING, PLLC | JMC SITE DEVELOPMENT CONSULTANTS, LLC | JOHN MEYER CONSULTING, INC. (JMC). Any modifications or alterations to this document without the written permission of JMC shall render them invalid and unusable.

NOT FOR CONSTRUCTION

OVERALL TREE LIST

POINT #	COMMON NAME	DBH	STEMS	CONDITION	INVASIVE	STATUS	SIGNIFICANT /SPECIMEN/ PROTECTED	TOTAL CALIPER (SIGNIFICANT)	TOTAL CALIPER (SPECIMEN)	PROTECTED BIG TREE
2379	SUGAR MAPLE	22 14	TW	G	N	REMOVE	SP/SIG	14	22	N/A
2380	AMERICAN BEECH	10	S	G	N	REMOVE	N/A	N/A	N/A	N/A
2381	SUGAR MAPLE	10	S	G	N	REMAIN	N/A	N/A	N/A	N/A
2382	SUGAR MAPLE	16	S	G	N	REMAIN	SIG	16	N/A	N/A
2383	WHITE HICKORY	18	S	G	N	REMAIN	SIG	18	N/A	N/A
2384	SUGAR MAPLE	14 12	TW	G	N	REMAIN	SIG	14	N/A	N/A
2385	WHITE HICKORY	12	S	G	N	REMAIN	N/A	N/A	N/A	N/A
2386	RED OAK	20 6	S	G	N	REMAIN	SP	N/A	20	N/A
2387	SUGAR MAPLE	12	S	G	N	REMAIN	N/A	N/A	N/A	N/A
2388	RED OAK	18	S	G	N	REMAIN	SIG	18	N/A	N/A
2389	RED OAK	10	S	G	N	REMAIN	N/A	N/A	N/A	N/A
2390	DEAD	16	S	DEAD	N	REMAIN	N/A	N/A	N/A	N/A
2391	RED OAK	18	S	G	N	REMAIN	SIG	18	N/A	N/A
2392	WHITE ASH	10	S	G	N	REMAIN	N/A	N/A	N/A	N/A
2393	SUGAR MAPLE	12	S	F	N	REMAIN	N/A	N/A	N/A	N/A
2394	WHITE OAK	14	S	G	N	REMAIN	SIG	14	N/A	N/A
2395	WHITE HICKORY	12	S	G	N	REMAIN	N/A	N/A	N/A	N/A
2396	SUGAR MAPLE	16 4	TW	G	N	REMAIN	SIG	16	N/A	N/A
2397	SUGAR MAPLE	14	S	G	N	REMAIN	SIG	14	N/A	N/A
2398	SUGAR MAPLE	10 6 4	S	G	N	REMAIN	N/A	N/A	N/A	N/A
2399	RED OAK	16	S	G	N	REMAIN	SIG	16	N/A	N/A
2400	RED OAK	16	S	G	N	REMAIN	SIG	16	N/A	N/A
2401	WHITE OAK	22	S	G	N	REMOVE	SP	N/A	22	N/A
2402	WHITE OAK	22	S	G	N	REMAIN	SP	N/A	22	N/A
2403	SUGAR MAPLE	20	S	G	N	REMAIN	SP	N/A	20	N/A
2404	SUGAR MAPLE	14	S	G	N	REMOVE	SIG	14	N/A	N/A
2405	SUGAR MAPLE	14	S	G	N	REMOVE	SIG	14	N/A	N/A
2406	RED OAK	18	S	G	N	REMAIN	SIG	18	N/A	N/A
2407	SUGAR MAPLE	10	S	G	N	REMOVE	N/A	N/A	N/A	N/A
2408	SUGAR MAPLE	12	S	G	N	REMOVE	N/A	N/A	N/A	N/A
2409	RED OAK	20	S	G	N	REMOVE	SP	N/A	20	N/A
2410	SUGAR MAPLE	16	S	G	N	REMOVE	SIG	16	N/A	N/A
2411	SUGAR MAPLE	14	S	G	N	REMOVE	SIG	14	N/A	N/A
2412	RED OAK	20	S	G	N	REMOVE	SP	N/A	20	N/A
2413	SUGAR MAPLE	22	S	G	N	REMOVE	SP	N/A	22	N/A
2414	WHITE OAK	10	S	G	N	REMOVE	N/A	N/A	N/A	N/A
2415	SUGAR MAPLE	12	S	G	N	REMOVE	N/A	N/A	N/A	N/A
2416	DEAD	10	S	DEAD	N	REMOVE	N/A	N/A	N/A	N/A
2417	SUGAR MAPLE	12	S	G	N	REMOVE	N/A	N/A	N/A	N/A
2418	RED OAK	20	S	G	N	REMOVE	SP	N/A	20	N/A
2419	WHITE OAK	36	S	G	N	REMOVE	SP	N/A	36	N/A
2420	SHAGBARK HICKORY	12	S	G	N	REMAIN	N/A	N/A	N/A	N/A
2421	WHITE OAK	22	S	G	N	REMAIN	SP	N/A	22	N/A
2422	SUGAR MAPLE	10	S	G	N	REMAIN	N/A	N/A	N/A	N/A
2423	SUGAR MAPLE	10	S	G	N	REMAIN	N/A	N/A	N/A	N/A
2424	WHITE OAK	10	S	G	N	REMAIN	N/A	N/A	N/A	N/A
2425	SUGAR MAPLE	10	S	G	N	REMAIN	N/A	N/A	N/A	N/A
2426	SUGAR MAPLE	10	S	G	N	REMAIN	N/A	N/A	N/A	N/A
2427	RED OAK	20	S	G	N	REMAIN	SP	N/A	20	N/A
2428	SUGAR MAPLE	16	S	G	N	REMAIN	SIG	16	N/A	N/A
2429	SUGAR MAPLE	16	S	G	N	REMAIN	SIG	16	N/A	N/A
2430	AMERICAN BEECH	16	S	G	N	REMAIN	SIG	16	N/A	N/A
2431	SUGAR MAPLE	14	S	G	N	REMAIN	SIG	14	N/A	N/A
2432	SHAGBARK HICKORY	14	S	G	N	REMAIN	SIG	14	N/A	N/A
2433	SHAGBARK HICKORY	10	S	G	N	REMAIN	N/A	N/A	N/A	N/A
2434	WHITE OAK	32	S	G	N	REMAIN	SP	N/A	32	N/A
2435	SHAGBARK HICKORY	14	S	G	N	REMAIN	SIG	14	N/A	N/A
2436	DEAD	10	S	DEAD	N	REMOVE	N/A	N/A	N/A	N/A
2437	RED OAK	18	S	G	N	REMOVE	SIG	18	N/A	N/A
2438	WHITE ASH	10	S	P	N	REMOVE	N/A	N/A	N/A	N/A
2439	WHITE OAK	18	S	G	N	REMOVE	SIG	18	N/A	N/A
2440	SUGAR MAPLE	14	S	G	N	REMOVE	SIG	14	N/A	N/A
2441	RED OAK	26	S	G	N	REMOVE	SP	N/A	26	N/A
2442	SUGAR MAPLE	16	S	G	N	REMAIN	SIG	16	N/A	N/A
2443	DEAD	10	S	DEAD	N	REMOVE	N/A	N/A	N/A	N/A
2444	SUGAR MAPLE	12	S	G	N	REMOVE	N/A	N/A	N/A	N/A
2445	SUGAR MAPLE	10	S	G	N	REMOVE	N/A	N/A	N/A	N/A
2446	WHITE OAK	24	S	G	N	REMOVE	SP	N/A	24	N/A
2447	AMERICAN BEECH	10	S	G	N	REMOVE	N/A	N/A	N/A	N/A
2448	SUGAR MAPLE	14	S	G	N	REMOVE	SIG	14	N/A	N/A
2449	SUGAR MAPLE	10	S	G	N	REMOVE	N/A	N/A	N/A	N/A
2450	RED OAK	20	S	G	N	REMOVE	SP	N/A	20	N/A
2451	SUGAR MAPLE	16 12	S	G	N	REMOVE	SIG	16	N/A	N/A
2452	SUGAR MAPLE	14	S	G	N	REMOVE	SIG	14	N/A	N/A
2453	SUGAR MAPLE	16	S	P	N	REMOVE	N/A	N/A	N/A	N/A
2454	RED OAK	22	S	G	N	REMAIN	SP	N/A	22	N/A
2455	SUGAR MAPLE	12	S	G	N	REMOVE	N/A	N/A	N/A	N/A
2456	RED OAK	24	S	G	N	REMOVE	SP	N/A	24	N/A
2457	SUGAR MAPLE	14	S	G	N	REMOVE	SIG	14	N/A	N/A
2458	AMERICAN BEECH	10	S	G	N	REMOVE	N/A	N/A	N/A	N/A
2459	SUGAR MAPLE	12	S	G	N	REMOVE	N/A	N/A	N/A	N/A
2460	RED OAK	22	S	G	N	REMOVE	SP	N/A	22	N/A
2461	SUGAR MAPLE	16	S	G	N	REMOVE	SIG	16	N/A	N/A
2462	SUGAR MAPLE	14	S	G	N	REMOVE	SIG	14	N/A	N/A
2463	RED OAK	24	S	G	N	REMOVE	SP	N/A	24	N/A
2464	RED OAK	22	S	G	N	REMOVE	SP	N/A	22	N/A
2465	RED OAK	16	S	G	N	REMOVE	SIG	16	N/A	N/A
2466	SUGAR MAPLE	16	S	G	N	REMOVE	SIG	16	N/A	N/A
2467	WHITE OAK	10	S	F	N	REMOVE	N/A	N/A	N/A	N/A
2468	RED OAK	18	S	G	N	REMOVE	SIG	18	N/A	N/A
2469	RED OAK	20	S	G	N	REMOVE	SP	N/A	20	N/A
2470	SUGAR MAPLE	14	S	G	N	REMOVE	SIG	14	N/A	N/A
2471	WHITE OAK	12	S	G	N	REMOVE	N/A	N/A	N/A	N/A
2472	WHITE OAK	16	S	G	N	REMOVE	SIG	16	N/A	N/A
2473	RED OAK	24	S	G	N	REMOVE	SP	N/A	24	N/A
2474	SHAGBARK HICKORY	14	S	G	N	REMOVE	SIG	14	N/A	N/A
2475	RED OAK	16	S	G	N	REMOVE	SIG	16	N/A	N/A
2476	RED OAK	16	S	G	N	REMAIN	SIG	16	N/A	N/A
2477	SUGAR MAPLE	14	S	G	N	REMAIN	SIG	14	N/A	N/A
2478	SUGAR MAPLE	16	S	G	N	REMOVE	SIG	16	N/A	N/A
2479	WHITE OAK	12	S	G	N	REMOVE	N/A	N/A	N/A	N/A
2480	WHITE OAK	16	S	G	N	REMAIN	SIG	16	N/A	N/A
2481	WHITE OAK	20	S	G	N	REMAIN	SP	N/A	20	N/A
2482	SHAGBARK HICKORY	14	S	G	N	REMAIN	SIG	14	N/A	N/A
2483	SUGAR MAPLE	12	S	G	N	REMAIN	N/A	N/A	N/A	N/A
2484	SUGAR MAPLE	12	S	G	N	REMAIN	N/A	N/A	N/A	N/A
2485	SUGAR MAPLE	10	S	G	N	REMOVE	N/A	N/A	N/A	N/A
2486	SHAGBARK HICKORY	18	S	G	N	REMAIN	SIG	18	N/A	N/A
2487	WHITE OAK	18	S	G	N	REMOVE	SIG	18	N/A	N/A
2488	WHITE OAK	22	S	G	N	REMOVE	SP	N/A	22	N/A
2489	SUGAR MAPLE	10	S	G	N	REMOVE	N/A	N/A	N/A	N/A
2490	SUGAR MAPLE	10	S	G	N	REMOVE	N/A	N/A	N/A	N/A
2491	AMERICAN BEECH	22	S	G	N	REMOVE	SP	N/A	22	N/A

POINT #	COMMON NAME	DBH	STEMS	CONDITION	INVASIVE	STATUS	SIGNIFICANT /SPECIMEN/ PROTECTED	TOTAL CALIPER (SIGNIFICANT)	TOTAL CALIPER (SPECIMEN)	PROTECTED BIG TREE
2492	AMERICAN BEECH	14	S	G	N	REMOVE	SIG	14	N/A	N/A
2493	SUGAR MAPLE	14	TW	G	N	REMOVE	SIG	28	N/A	N/A
2494	SUGAR MAPLE	12	S	G	N	REMOVE	N/A	N/A	N/A	N/A
2495	WHITE OAK	10	S	G	N	REMOVE	N/A	N/A	N/A	N/A
2496	SUGAR MAPLE	14	TW	G	N	REMOVE	SIG	28	N/A	N/A
2497	SUGAR MAPLE	10	S	G	N	REMOVE	N/A	N/A	N/A	N/A
2498	SUGAR MAPLE	10	S	G	N	REMOVE	N/A	N/A	N/A	N/A
2499	SUGAR MAPLE	18	S	G	N	REMOVE	SIG	18	N/A	N/A
2500	SUGAR MAPLE	10	S	G	N	REMOVE	N/A	N/A	N/A	N/A
2501	RED OAK	18	S	G	N	REMOVE	SIG	18	N/A	N/A
2502	WHITE OAK	16	S	G	N	REMOVE	SIG	16	N/A	N/A
2503	SUGAR MAPLE	10	S	G	N	REMOVE	N/A	N/A	N/A	N/A
2504	AMERICAN BEECH	16	S	G	N	REMAIN	SIG	16	N/A	N/A
2505	WHITE OAK	16 14	TW	G	N	REMAIN	SIG	30	N/A	N/A
2506	WHITE OAK	20	S	G	N	REMAIN	SP	N/A	20	N/A
2507	WHITE OAK	22	S	G	N	REMAIN	SP	N/A	22	N/A
2508	SHAGBARK HICKORY	20	S	G	N	REMAIN	SP	N/A	20	N/A
2509	RED OAK	22	S	G	N	REMAIN	SP	N/A	22	N/A
2510	WHITE OAK	20	S	G	N	REMAIN	SP	N/A	20	N/A
2511	RED OAK	18	S	G	N	REMAIN	SIG	18	N/A	N/A
2512	RED OAK	14	S	G	N	REMAIN	SIG	14	N/A	N/A
2513	EASTERN HEMLOCK	14	S	G	N	REMAIN	SIG	14	N/A	N/A
2514	WHITE OAK	10	S	G	N	REMAIN	N/A	N/A	N/A	N/A
2515	RED OAK	10	S	G	N	REMAIN	N/A	N/A	N/A	N/A
2516	AMERICAN BEECH	16	S	G	N	REMAIN	SIG	16	N/A	N/A
2517	WHITE OAK	16	S	G	N	REMAIN	SIG	16	N/A	N/A
2518	SUGAR MAPLE	10	S	G	N	REMAIN	N/A	N/A	N/A	N/A
2519	WHITE OAK	16	S	G	N	REMAIN	SIG	16	N/A	N/A
2520	SASSAFRAS	12	S	G	N	REMAIN	N/A	N/A	N/A	N/A
2521	SUGAR MAPLE	10 6	TW	G	N	REMOVE	N/A	N/A	N/A	N/A
2522	SUGAR MAPLE	14	S	G	N	REMAIN	SIG	14	N/A	N/A
2523	SHAGBARK HICKORY	14	S	G	N	REMOVE	SIG	14	N/A	N/A
2524	DEAD	10	TW	DEAD	N	REMOVE	N/A	N/A	N/A	N/A
2525	SUGAR MAPLE	14	S	G	N	REMOVE	SIG	14	N/A	N/A
2526	SUGAR MAPLE	16	S	G	N	REMAIN	SIG	16	N/A	N/A
2527	WHITE OAK	14	S	G	N	REMAIN	SIG	14	N/A	N/A
2528	RED OAK	20	S	G	N	REMAIN	SP	N/A	20	N/A
2529	SUGAR MAPLE	16 14 10	TR	G	N	REMAIN	SIG	30	N/A	N/A
2530	WHITE OAK	18	S	G	N	REMAIN	SIG	18	N/A	N/A
2531	SMOOTHBARK HICKORY	16	S	G	N	REMAIN	SIG	16	N/A	N/A
2532	SUGAR MAPLE	10	S	G	N	REMAIN	N/A	N/A	N/A	N/A
2533	WHITE OAK	18 16	TW	G	N	REMAIN	SIG	34	N/A	N/A
2534	SUGAR MAPLE	14	S	G	N	REMAIN	SIG	14	N/A	N/A
2535	SUGAR MAPLE	16	S	G	N	REMAIN	SIG	16	N/A	N/A
2536	SUGAR MAPLE	10 6	TW	G	N	REMAIN	N/A	N/A	N/A	N/A
2537	DEAD	14	S	DEAD	N	REMAIN	N/A	N/A	N/A	N/A
2538	WHITE OAK	18	S	F	N	REMAIN	N/A	N/A	N/A	N/A
2539	WHITE ASH	14	S	G	N	REMAIN	SIG	14	N/A	N/A
2540	RED OAK	16	S	G	N	REMAIN	SIG	16	N/A	N/A
2541	SUGAR MAPLE	20	S	G	N	REMAIN	SP	N/A	20	N/A
2542	SUGAR MAPLE	10	S	G	N	REMAIN	N/A	N/A	N/A	N/A
2543	SYCAMORE	10	S	G	N	REMAIN	N/A	N/A	N/A	N/A
2544	AMERICAN ELM	10	S	G	N	REMAIN	N/A	N/A	N/A	N/A
2545	WHITE OAK	24	S	F	N	REMAIN	N/A	N/A	N/A	N/A
2546	WHITE OAK	20	S	F	N	REMAIN	N/A	N/A	N/A	N/A
2547	WHITE OAK	24	S	F	N	REMAIN	N/A	N/A	N/A	N/A
2548	DEAD	22	S	DEAD	N	REMAIN	N/A	N/A	N/A	N/A
2549	WHITE OAK	20	S	P	N	REMAIN	N/A	N/A	N/A	N/A
2550	SHAGBARK HICKORY	18	S	G	N	REMAIN	SIG	18	N/A	N/A
2551	SHAGBARK HICKORY	10	S	G	N	REMAIN	N/A	N/A	N/A	N/A
2552	BLACK WALNUT	12	S	G	N	REMAIN	N/A	N/A	N/A	N/A
2553	SUGAR MAPLE	12 12 6	TR	G	N	REMAIN	N/A	N/A	N/A	N/A
2554	WHITE OAK	18	S	G	N	REMAIN	SIG	18	N/A	N/A
2555	DEAD	16	S	DEAD	N	REMAIN	N/A	N/A	N/A	N/A
2556	WHITE OAK	16 12	TW	G	N	REMAIN	SIG	16	N/A	N/A
2557	SMOOTHBARK HICKORY	16	S	G	N	REMAIN	SIG	16	N/A	N/A
2558	AMERICAN BEECH	16	S	G	N	REMAIN	SIG	16	N/A	N/A
2559	RED OAK	16	S	G	N	REMAIN	SIG	16	N/A	N/A
2560	RED OAK	16	S	G	N	REMAIN	SIG	16	N/A	N/A
2561	SMOOTHBARK HICKORY	18	S	G	N	REMAIN	SIG	18	N/A	N/A
2562	SMOOTHBARK HICKORY	16	S	G	N	REMOVE	SIG	16	N/A	N/A
2563	SMOOTHBARK HICKORY	14 10	TW	G	N	REMOVE	SIG	14	N/A	N/A
2564	SMOOTHBARK HICKORY	20 10	TW	G	N	REMOVE	SP	N/A	20	N/A
2565	AMERICAN BEECH	16	S	G	N	REMAIN	SIG	16	N/A	N/A
2566	RED OAK	16	S	G	N	REMAIN	SIG	16	N/A	N/A
2567	SMOOTHBARK HICKORY	14 8	TW	G	N	REMAIN	SIG	14	N/A	N/A
2568	SHAGBARK HICKORY	16	S	G	N	REMAIN	SIG	16	N/A	N/A
2569	SMOOTHBARK HICKORY	12	S	G	N	REMAIN	N/A	N/A	N/A	N/A
2570	WHITE ASH	18	S	F	N	REMAIN	N/A	N/A	N/A	N/A
2571	SUGAR MAPLE	18	S	G	N	REMAIN	SIG	18	N/A	N/A
2572	SUGAR MAPLE	14 6	TW	G	N	REMOVE	SIG	14	N/A	N/A
2573	RED OAK	18	S	G	N	REMOVE	SIG	18	N/A	N/A
2574	SUGAR MAPLE	14	S	G	N	REMOVE	SIG	14	N/A	N/A
2575	SUGAR MAPLE	14	S	G	N	REMOVE	SIG	14	N/A	N/A
2576	AMERICAN BEECH	16 6	TW	G	N	REMOVE	SIG	16	N/A	N/A
2577	DEAD	14	S	DEAD	N	REMOVE	N/A	N/A	N/A	N/A
2578	AMERICAN BEECH	16	S	G	N	REMOVE	SIG	16	N/A	N/A
2579	AMERICAN BEECH	18	S	G	N	REMOVE	SIG	18	N/A	N/A
2580	AMERICAN BEECH	12	S	G	N	REMOVE	N/A	N/A	N/A	N/A
2581	AMERICAN BEECH	14	S	G	N	REMOVE	SIG	14	N/A	N/A
2582	AMERICAN BEECH	20	S	G	N	REMOVE	SP	N/A	20	N/A
2583	AMERICAN BEECH	14	S	G	N	REMOVE	SIG	14	N/A	N/A
2584	AMERICAN BEECH	16	S	G	N	REMOVE	SIG	16	N/A	N/A
2585	SUGAR MAPLE	16	S	G	N	REMOVE	SIG	16	N/A	N/A
2586	WHITE OAK	18	S	G	N	REMOVE	SIG	18	N/A	N/A
2587	RED OAK	20	S	G	N	REMOVE	SP	N/A	20	N/A
2588	SUGAR MAPLE	12 4	TW	G	N	REMOVE	N/A	N/A	N/A	N/A
2589	RED OAK	14	S	G	N	REMAIN	SIG	14	N/A	N/A
2590	RED OAK	22	S	G	N	REMOVE	SP	N/A	22	N/A
2591	RED OAK	16	S	G	N	REMOVE	SIG	16	N/A	N/A
2592	DEAD	14 12	TW	DEAD	N	REMOVE	N/A	N/A	N/A	N/A
2593	BLACK WALNUT	24	S	G	N	REMOVE	SP	N/A	24	N/A
2594	RED OAK	18	S	G	N	REMOVE	SIG	18	N/A	N/A
2595	RED OAK	16	S	G	N	REMOVE	SIG	16	N/A	N/A
2596	WHITE OAK	20	S	G	N	REMOVE	SP	N/A	20	N/A
2597	WHITE OAK	18	S	G	N	REMOVE	SIG	18	N/A	N/A
2598	AMERICAN BEECH	12	S	G	N	REMAIN	N/A	N/A	N/A	N/A
2599	RED OAK	14	S	G	N	REMAIN	SIG	14	N/A	N/A
2600	AMERICAN BEECH	12	S	G	N	REMAIN	N/A	N/A	N/A	N/A
2601	SUGAR MAPLE	10	S	G	N	REMAIN	N/A	N/A	N/A	N/A

POINT #	COMMON NAME	DBH	STEMS	CONDITION	INVASIVE	STATUS	SIGNIFICANT /SPECIMEN/ PROTECTED	TOTAL CALIPER (SIGNIFICANT)	TOTAL CALIPER (SPECIMEN)	PROTECTED BIG TREE
2602	WHITE ASH	18	S	G	N	REMAIN	SIG	18	N/A	N/A
2603	SUGAR MAPLE	12	S	G	N	REMAIN	N/A	N/A	N/A	N/A
2604	TREE OF HEAVEN	10	S	G	Y	REMAIN	N/A	N/A	N/A	N/A
2605	SHAGBARK HICKORY	10 6	TW	G	N	REMAIN	N/A	N/A	N/A	N/A
2606	DEAD	10	S	DEAD	N	REMAIN	N/A	N/A	N/A	N/A
2607	RED OAK	14	S	G	N	REMAIN	SIG	14	N/A	N/A
2608	WHITE OAK	16	S	G	N	REMAIN	SIG	16	N/A	N/A
2609	WHITE OAK	10	S	G	N	REMAIN	N/A	N/A	N/A	N/A
2610	SUGAR MAPLE	12	S	G	N	REMAIN	N/A	N/A	N/A	N/A
2611	SUGAR MAPLE	10	S	G	N	REMAIN	N/A	N/A	N/A	N/A
2612	RED OAK	20	S	G	N	REMAIN	SP	N/A	20	N/A
2613	RED OAK	14	S	G	N	REMAIN	SIG	14	N/A	N/A
2614	RED OAK	24	S	G	N	REMAIN	SP	N/A	24	N/A
2615	RED OAK	14	TW	G	N	REMAIN	SIG	28	N/A	N/A
2616	RED OAK	14	S	G	N	REMAIN	SIG	14	N/A	N/A
2617	RED OAK	16	S	G	N	REMAIN	SIG	16	N/A	N/A
2618	SMOOTHBARK HICKORY	12	S	G	N	REMAIN	N/A	N/A	N/A	N/A
2619	RED OAK	14	S	G	N	REMAIN	SIG	14	N/A	N/A
2620	RED OAK	16	S	G	N	REMAIN	SIG	16	N/A	N/A
2621	RED OAK	10	S	G	N	REMAIN	N/A	N/A	N/A	N/A
2622	SMOOTHBARK HICKORY	16	S	G	N	REMAIN	SIG	16	N/A	N/A
2623	RED OAK	18	S	G	N	REMAIN	SIG	18	N/A	N/A
2624	RED OAK	12	S	G	N	REMAIN	N/A	N/A	N/A	N/A
2625	RED OAK	18	S	G	N	REMAIN	SIG	18	N/A	N/A
2626	RED OAK	12	S	G	N	REMAIN	N/A	N/A	N/A	N/A
2627	RED OAK	16	S	G	N	REMAIN	SIG	16	N/A	N/A
2628	BLACK WALNUT	12	S	G	N	REMAIN	N/A	N/A	N/A	N/A
2629	RED OAK	16	S	G	N	REMAIN	SIG	16	N/A	N/A
2630	RED OAK	16	S	G	N	REMAIN	SIG	16	N/A	N/A
2631	RED OAK	18 18 14	TR	G	N	REMAIN	SIG	50	N/A	N/A
2632	RED OAK	18	S	G	N	REMAIN	SIG	18	N/A	N/A
2633	RED OAK	10	S	G	N	REMAIN	N/A	N/A	N/A	N/A
2634	SMOOTHBARK HICKORY	14	S	G	N	REMAIN	SIG	14	N/A	N/A
2635	SMOOTHBARK HICKORY	16	S	G	N	REMAIN	SIG	16	N/A	N/A
2636	BLACK WALNUT	18	S	G	N	REMAIN	SIG	18	N/A	N/A
2637	RED OAK	16	S	G	N	REMAIN	SIG	16	N/A	N/A
2638	WHITE ASH	20	S	G	N	REMAIN	SP	N/A	20	N/A
2639	RED OAK	16	S	G	N	REMAIN	SIG	16	N/A	N/A
2640	WHITE OAK	16	S	G	N	REMAIN	SIG	16	N/A	N/A
2641	SMOOTHBARK HICKORY	12	S	G	N	REMAIN	N/A	N/A	N/A	N/A
2642	WHITE OAK	12	S	G	N	REMAIN	N/A	N/A	N/A	N/A
2643	AMERICAN BEECH	10	S	G	N	REMAIN	N/A	N/A	N/A	N/A
2644	SMOOTHBARK HICKORY	10	S	G	N	REMAIN	N/A	N/A	N/A	N/A
2645	BLACK CHERRY	10	S	G	N	REMAIN	N/A	N/A	N/A	N/A
2646	WHITE OAK	10	S	G	N	REMAIN	N/A	N/A	N/A	N/A
2647	AMERICAN BEECH	16	S	G	N	REMAIN	SIG	16	N/A	N/A
2648	SUGAR MAPLE	16	S	G	N	REMAIN	SIG	16	N/A	N/A
2649	SUGAR MAPLE	12	S	G	N	REMAIN	N/A	N/A	N/A	N/A
2650	WHITE OAK	12	S	G	N	REMAIN	N/A	N/A	N/A	N/A
2651	BLACK CHERRY	10	S	G	N	REMAIN	N/A	N/A	N/A	N/A
2652	SMOOTHBARK HICKORY	14	S	G	N	REMAIN	SIG	14	N/A	N/A
2653	SUGAR MAPLE	12 10 4	S	G	N	REMAIN	N/A	N/A	N/A	N/A
2654	SMOOTHBARK HICKORY	12	S	G	N	REMAIN	N/A	N/A	N/A	N/A
2655	SMOOTHBARK HICKORY	10 4	TW	G	N	REMOVE	N/A	N/A	N/A	N/A
2656	SMOOTHBARK HICKORY	12	S	G	N	REMOVE	N/A	N/A	N/A	N/A
2657	SMOOTHBARK HICKORY	10	S	G	N	REMAIN	N/A	N/A	N/A	N/A
2658	SMOOTHBARK HICKORY	10	S	G	N	REMAIN	N/A	N/A	N/A	N/A
2659	SUGAR MAPLE	10 4	TW	G	N	REMAIN	N/A	N/A	N/A	N/A
2660	RED OAK	18	S	G	N	REMOVE	SIG	18	N/A	N/A
2661	RED CEDAR	10	S	G	N	REMOVE	SIG	10	N/A	N/A
2662	SMOOTHBARK HICKORY	10	S	G	N	REMOVE	N/A	N/A	N/A	N/A
2663	SMOOTHBARK HICKORY	10	S	G	N	REMOVE	N/A	N/A	N/A	N/A
2664	RED OAK	16	TW	G	N	REMOVE	SIG	32	N/A	N/A
2665	RED OAK	14	S	G	N	REMOVE	SIG	14	N/A	N/A
2666	RED OAK	12	S	G	N	REMOVE	N/A	N/A	N/A	N/A
2667	RED OAK	18	TW	G	N	REMOVE	SIG	36	N/A	N/A
2668	SMOOTHBARK HICKORY	14	S	G	N	REMOVE	SIG	14	N/A	N/A
2669	SMOOTHBARK HICKORY	10	S	G	N	REMOVE	N/A	N/A	N/A	N/A
2670	SMOOTHBARK HICKORY	10	S	G	N	REMOVE	N/A	N/A	N/A	N/A
2671	SMOOTHBARK HICKORY	10	S	G	N	REMOVE	N/A	N/A	N/A	N/A
2672	SMOOTHBARK HICKORY	12	S	G	N	REMOVE	N/A	N/A	N/A	N/A
2673	WHITE ASH	16	S	G	N	REMOVE	SIG	16	N/A	N/A
2674	RED OAK	18	S	G	N	REMOVE	SIG	18	N/A	N/A
2675	SMOOTHBARK HICKORY	20	S	G	N	REMOVE	SP	N/A	20	N/A
2676	SMOOTHBARK HICKORY	12	S	G	N	REMOVE	N/A	N/A	N/A	N/A
2677	SUGAR MAPLE	16	S	G	N	REMOVE	SIG	16	N/A	N/A
2678	DEAD	12	S	DEAD	N	REMOVE	N/A	N/A	N/A	N/A
2679	SHAGBARK HICKORY	10	S	G	N	REMOVE	N/A	N/A	N/A	N/A
2680	DEAD	6	TW	DEAD	N	REMOVE	N/A	N/A	N/A	N/A
2681	RED OAK	20 16 14	TR	G	N	REMOVE	SP/SIG	30	20	N/A
2682	RED OAK	14	S	G	N	REMOVE	SIG	14	N/A	N/A
2683	RED OAK	14	S	G	N	REMOVE	SIG	14	N/A	N/A
2684	SMOOTHBARK HICKORY	16	S	G	N	REMOVE	SIG	16	N/A	N/A
2685	SUGAR MAPLE	16	S	G	N	REMOVE	SIG	16	N/A	N/A
2686	BLACK CHERRY	12	S	G	N	REMOVE	N/A	N/A	N/A	N/A
2687	SUGAR MAPLE	14	S	G	N	REMOVE	SIG	14	N/A	N/A
2688	RED OAK	12	S	G	N	REMOVE	N/A	N/A	N/A	N/A
2689	SUGAR MAPLE	14	S	G	N	REMOVE	SIG	14	N/A	N/A
2690	DEAD	12	S	DEAD	N	REMOVE	N/A	N/A	N/A	N/A
2691	BLACK OAK	26	S	G	N	REMOVE	SP	N/A	26	N/A
2692	DEAD	12	S	DEAD	N	REMOVE	N/A	N/A	N/A	N/A
2693	WHITE OAK	10	S	G	N	REMOVE	N/A	N/A	N/A	N/A
2694	SUGAR MAPLE	20	S	G	N	REMOVE	SP	N/A	20	N/A
2695	RED OAK	16	S	G	N	REMOVE	SIG	16	N/A	N/A
2696	RED OAK	12	S	G	N	REMOVE	N/A	N/A	N/A	N/A
2697	RED OAK	14	S	G	N	REMOVE	SIG	14	N/A	N/A
2698	RED OAK	14	S	G	N	REMOVE	SIG	14	N/A	N/A
2699	RED OAK	12	S	G	N	REMOVE	N/A	N/A	N/A	N/A
2700	RED OAK	10	S	G	N	REMOVE	N/A	N/A	N/A	N/A
2701	RED OAK	12	S	G	N	REMOVE	N/A	N/A	N/A	N/A
2702	RED OAK	10	S	G	N	REMOVE	N/A	N/A	N/A	N/A
2703	BLACK OAK	20	S	G	N	REMOVE	SP	N/A	20	N/A
2704	BLACK OAK	14	S	G	N	REMOVE	SIG	14	N/A	N/A
2705	BLACK OAK	10	S	G	N	REMOVE	N/A	N/A	N/A	N/A
2706	BLACK OAK	16	S	G	N	REMOVE	SIG	16	N/A	N/A

TREE CHART ABBREVIATIONS

- DBH – DIAMETER BREAST HEIGHT
- S – SINGLE STEM
- TW – TWIN STEM
- TR – TRIPLE STEM
- MU – MULTI STEM
- G – GOOD CONDITION
- F – FAIR CONDITION
- P – POOR CONDITION
- C – CRITICAL CONDITION
- Y – YES
- N – NO
- SP – SPECIMEN TREE
- SIG – SIGNIFICANT TREE
- PR – PROTECTED
- N/A – NOT APPLICABLE

No.	Revision	Date	By
1.	REVISED PER PLANNING BOARD COMMENTS	06/19/2023	RFA

Previous Editions Obsolete

APPLICANT:
YM & YH DEVELOPERS LLC
1156 59TH STREET
BROOKLYN, NY 11219

JMC Planning, Engineering, Landscape Architecture & Land Surveying, PLLC
JMC Site Development Consultants, LLC
John Meyer Consulting, Inc.
120 BEDFORD ROAD • ARMONK, NY 10504
voice 914.273.5225 • fax 914.273.2102
www.jmcpllc.com

TREE LIST
FARRELL INDUSTRIAL PARK
ROUTE 300
TOWN OF NEWBURGH, NY

ANY ALTERATION OF PLANS, SPECIFICATIONS, PLATS AND REPORTS BEARING THE SEAL OF A LICENSED PROFESSIONAL ENGINEER OR LICENSED LAND SURVEYOR IS A VIOLATION OF ARTICLE 145 OF THE NEW YORK STATE EDUCATION LAW, EXCEPT AS PROVIDED FOR BY SECTION 7209, SUBSECTION 2.

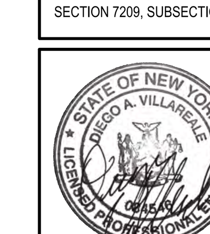

Drawn: TC Approved: DL/JS
Scale: N.T.S
Date: 04/19/2023
Project No: 22127
22127-TREE PLAN | C-024 | LAY.scr
Drawing No: C-024

NOT FOR CONSTRUCTION

COPYRIGHT © 2021 by JMC All Rights Reserved. No part of this document may be reproduced, stored in a retrieval system, or transmitted in any form or by means, electronic, mechanical, photocopying, recording or otherwise, without the prior written permission of JMC PLANNING, ENGINEERING, LANDSCAPE ARCHITECTURE & LAND SURVEYING, PLLC | JMC SITE DEVELOPMENT CONSULTANTS, LLC | JOHN MEYER CONSULTING, INC. (JMC). Any modifications or alterations to this document without the written permission of JMC shall render them invalid and unusable.

OVERALL TREE LIST

POINT #	COMMON NAME	DBH	STEMS	CONDITION	INVASIVE	STATUS	SIGNIFICANT /SPECIMEN/ PROTECTED	TOTAL CALIPER (SIGNIFICANT)	TOTAL CALIPER (SPECIMEN)	PROTECTED BIG TREE
2707	RED OAK	12	S	G	N	REMOVE	N/A	N/A	N/A	N/A
2708	RED OAK	12	S	G	N	REMOVE	N/A	N/A	N/A	N/A
2709	RED OAK	10	S	G	N	REMOVE	N/A	N/A	N/A	N/A
2710	RED OAK	10	S	G	N	REMOVE	N/A	N/A	N/A	N/A
2711	RED OAK	20	S	G	N	REMOVE	SP	N/A	20	N/A
2712	RED OAK	16	S	G	N	REMOVE	SIG	16	N/A	N/A
2713	RED OAK	20	S	G	N	REMOVE	SP	N/A	20	N/A
2714	RED OAK	12	S	G	N	REMOVE	N/A	N/A	N/A	N/A
2715	RED OAK	10	S	G	N	REMOVE	N/A	N/A	N/A	N/A
2716	RED OAK	16	S	G	N	REMOVE	SIG	16	N/A	N/A
2717	WHITE OAK	10	S	G	N	REMOVE	N/A	N/A	N/A	N/A
2718	BLACK OAK	14	S	G	N	REMOVE	SIG	14	N/A	N/A
2719	BLACK OAK	14	S	G	N	REMOVE	SIG	14	N/A	N/A
2720	BLACK OAK	12	S	G	N	REMOVE	N/A	N/A	N/A	N/A
2721	SHAGBARK HICKORY	10	S	G	N	REMOVE	N/A	N/A	N/A	N/A
2722	BLACK OAK	16	S	G	N	REMOVE	SIG	16	N/A	N/A
2723	RED OAK	14	S	G	N	REMOVE	SIG	14	N/A	N/A
2724	RED OAK	14 12 10	TR	G	N	REMOVE	SIG	14	N/A	N/A
2725	BLACK OAK	18	TW	G	N	REMOVE	SIG	36	N/A	N/A
2726	RED OAK	12	S	G	N	REMOVE	N/A	N/A	N/A	N/A
2727	RED OAK	12	S	G	N	REMOVE	N/A	N/A	N/A	N/A
2728	RED OAK	16	S	G	N	REMOVE	SIG	16	N/A	N/A
2729	RED OAK	12	S	G	N	REMAIN	N/A	N/A	N/A	N/A
2730	RED OAK	16	S	G	N	REMAIN	SIG	16	N/A	N/A
2731	RED OAK	12	S	G	N	REMAIN	N/A	N/A	N/A	N/A
2732	RED OAK	14	S	G	N	REMAIN	SIG	14	N/A	N/A
2733	RED OAK	10	S	G	N	REMAIN	N/A	N/A	N/A	N/A
2734	RED OAK	18	S	G	N	REMAIN	SIG	18	N/A	N/A
2735	WILD CHERRY	12	S	P	N	REMAIN	N/A	N/A	N/A	N/A
2736	BLACK OAK	16	S	G	N	REMAIN	SIG	16	N/A	N/A
2737	RED OAK	12	S	G	N	REMOVE	N/A	N/A	N/A	N/A
2738	RED OAK	12	S	G	N	REMOVE	N/A	N/A	N/A	N/A
2739	RED OAK	16	S	G	N	REMOVE	SIG	16	N/A	N/A
2740	RED OAK	10	S	G	N	REMOVE	N/A	N/A	N/A	N/A
2741	RED OAK	14	S	G	N	REMOVE	SIG	14	N/A	N/A
2742	RED OAK	12	S	G	N	REMOVE	N/A	N/A	N/A	N/A
2743	RED OAK	18	S	G	N	REMAIN	SIG	18	N/A	N/A
2744	RED OAK	10	S	G	N	REMOVE	N/A	N/A	N/A	N/A
2745	RED OAK	10	TW	G	N	REMOVE	N/A	N/A	N/A	N/A
2746	RED OAK	14	TW	G	N	REMOVE	SIG	28	N/A	N/A
2747	RED OAK	10	S	G	N	REMOVE	N/A	N/A	N/A	N/A
2748	RED OAK	14	S	G	N	REMOVE	SIG	14	N/A	N/A
2749	RED OAK	12	S	G	N	REMOVE	N/A	N/A	N/A	N/A
2750	RED OAK	16	S	G	N	REMOVE	SIG	16	N/A	N/A
2751	RED OAK	10	S	G	N	REMOVE	N/A	N/A	N/A	N/A
2752	SUGAR MAPLE	10	S	G	N	REMOVE	N/A	N/A	N/A	N/A
2753	BLACK OAK	18	S	G	N	REMOVE	SIG	18	N/A	N/A
2754	RED OAK	10	S	G	N	REMOVE	N/A	N/A	N/A	N/A
2755	RED OAK	14	S	G	N	REMOVE	SIG	14	N/A	N/A
2756	SHAGBARK HICKORY	14	S	G	N	REMOVE	SIG	14	N/A	N/A
2757	AMERICAN BEECH	10	S	G	N	REMOVE	N/A	N/A	N/A	N/A
2758	SHAGBARK HICKORY	14	S	G	N	REMOVE	SIG	14	N/A	N/A
2759	RED OAK	14	S	G	N	REMOVE	SIG	14	N/A	N/A
2760	RED OAK	12	S	G	N	REMOVE	N/A	N/A	N/A	N/A
2761	RED OAK	18	S	G	N	REMOVE	SIG	18	N/A	N/A
2762	BLACK OAK	10	S	P	N	REMOVE	N/A	N/A	N/A	N/A
2763	RED OAK	10 6 4	TR	G	N	REMOVE	N/A	N/A	N/A	N/A
2764	RED OAK	10	S	G	N	REMOVE	N/A	N/A	N/A	N/A
2765	RED OAK	20	S	G	N	REMOVE	SP	N/A	20	N/A
2766	RED OAK	10	S	G	N	REMOVE	N/A	N/A	N/A	N/A
2767	RED OAK	16	S	G	N	REMOVE	SIG	16	N/A	N/A
2768	RED OAK	14 12	TW	G	N	REMOVE	SIG	14	N/A	N/A
2769	RED OAK	10	S	G	N	REMOVE	N/A	N/A	N/A	N/A
2770	RED OAK	12	S	G	N	REMOVE	N/A	N/A	N/A	N/A
2771	RED OAK	16	S	G	N	REMOVE	SIG	16	N/A	N/A
2772	RED OAK	10	S	G	N	REMOVE	N/A	N/A	N/A	N/A
2773	BLACK OAK	16	S	G	N	REMOVE	SIG	16	N/A	N/A
2774	RED OAK	16	S	G	N	REMAIN	SIG	16	N/A	N/A
2775	RED OAK	14	S	G	N	REMOVE	SIG	14	N/A	N/A
2776	BLACK OAK	18	S	G	N	REMAIN	SIG	18	N/A	N/A
2777	RED OAK	10	S	G	N	REMOVE	N/A	N/A	N/A	N/A
2778	RED OAK	12	S	G	N	REMAIN	N/A	N/A	N/A	N/A
2779	RED OAK	16	S	G	N	REMOVE	SIG	16	N/A	N/A
2780	RED OAK	14	S	G	N	REMAIN	SIG	14	N/A	N/A
2781	RED OAK	14 6	TW	G	N	REMAIN	SIG	14	N/A	N/A
2782	RED OAK	16	S	F	N	REMAIN	N/A	N/A	N/A	N/A
2783	RED OAK	14	S	G	N	REMOVE	SIG	14	N/A	N/A
2784	RED OAK	16	S	G	N	REMOVE	SIG	16	N/A	N/A
2785	RED OAK	14	S	G	N	REMOVE	SIG	14	N/A	N/A
2786	SUGAR MAPLE	14	S	G	N	REMOVE	SIG	14	N/A	N/A
2787	RED OAK	10	S	G	N	REMOVE	N/A	N/A	N/A	N/A
2788	RED OAK	18	S	G	N	REMOVE	SIG	18	N/A	N/A
2789	RED OAK	14	S	G	N	REMAIN	SIG	14	N/A	N/A
2790	RED OAK	12	S	G	N	REMAIN	N/A	N/A	N/A	N/A
2791	RED OAK	12	S	G	N	REMAIN	N/A	N/A	N/A	N/A
2792	RED OAK	16	S	G	N	REMOVE	SIG	16	N/A	N/A
2793	RED OAK	16	S	G	N	REMOVE	SIG	16	N/A	N/A
2794	BLACK OAK	14	S	G	N	REMAIN	SIG	14	N/A	N/A
2795	RED OAK	10	S	G	N	REMAIN	N/A	N/A	N/A	N/A
2796	AMERICAN HOPHORNBEAM	14	S	G	N	REMAIN	SIG	14	N/A	N/A
2797	RED OAK	10	S	G	N	REMOVE	N/A	N/A	N/A	N/A
2798	RED OAK	12	S	G	N	REMOVE	N/A	N/A	N/A	N/A
2799	RED OAK	10	S	G	N	REMOVE	N/A	N/A	N/A	N/A
2800	RED OAK	20 6	TW	G	N	REMOVE	SP	N/A	20	N/A
2801	RED OAK	14	S	G	N	REMOVE	SIG	14	N/A	N/A
2802	WHITE OAK	16 12	TW	G	N	REMOVE	SIG	16	N/A	N/A
2803	WHITE OAK	10	S	G	N	REMOVE	N/A	N/A	N/A	N/A
2804	RED OAK	16	S	G	N	REMOVE	SIG	16	N/A	N/A
2805	WHITE OAK	10	S	G	N	REMOVE	N/A	N/A	N/A	N/A
2806	DEAD	10	S	DEAD	N	REMOVE	N/A	N/A	N/A	N/A
2807	RED OAK	14	S	G	N	REMAIN	SIG	14	N/A	N/A
2808	DEAD	10	S	DEAD	N	REMAIN	N/A	N/A	N/A	N/A
2809	RED OAK	10	S	G	N	REMAIN	N/A	N/A	N/A	N/A
2810	SUGAR MAPLE	14	S	G	N	REMOVE	SIG	14	N/A	N/A
2811	RED OAK	14	S	G	N	REMOVE	SIG	14	N/A	N/A
2812	AMERICAN HOPHORNBEAM	16	S	G	N	REMOVE	SIG	16	N/A	N/A
2813	SUGAR MAPLE	22	S	G	N	REMOVE	SP	N/A	22	N/A
2814	DEAD	14	S	DEAD	N	REMOVE	N/A	N/A	N/A	N/A
2815	SUGAR MAPLE	16	S	G	N	REMOVE	SIG	16	N/A	N/A
2816	SUGAR MAPLE	16	S	G	N	REMOVE	SIG	16	N/A	N/A
2817	SUGAR MAPLE	20	S	G	N	REMOVE	SP	N/A	20	N/A
2818	SUGAR MAPLE	10	S	G	N	REMOVE	N/A	N/A	N/A	N/A
2819	SMOOTHBARK HICKORY	10	S	G	N	REMOVE	N/A	N/A	N/A	N/A
2820	SHAGBARK HICKORY	14	S	G	N	REMOVE	SIG	14	N/A	N/A
2821	SUGAR MAPLE	12	S	G	N	REMOVE	N/A	N/A	N/A	N/A
2822	SUGAR MAPLE	14	S	G	N	REMOVE	SIG	14	N/A	N/A
2823	DEAD	14	S	DEAD	N	REMOVE	N/A	N/A	N/A	N/A
2824	SUGAR MAPLE	34	S	G	N	REMOVE	SP	N/A	34	N/A
2825	SUGAR MAPLE	22	S	G	N	REMOVE	SP	N/A	22	N/A
2826	WHITE OAK	22	S	G	N	REMOVE	SP	N/A	22	N/A
2827	SUGAR MAPLE	14	S	G	N	REMOVE	SIG	14	N/A	N/A
2828	SUGAR MAPLE	16	S	G	N	REMOVE	SIG	16	N/A	N/A
2829	SMOOTHBARK HICKORY	14	S	G	N	REMOVE	SIG	14	N/A	N/A
2830	SUGAR MAPLE	12	S	G	N	REMOVE	N/A	N/A	N/A	N/A
2831	BLACK CHERRY	12 8	TW	G	N	REMOVE	N/A	N/A	N/A	N/A
2832	SUGAR MAPLE	16	S	G	N	REMOVE	SIG	16	N/A	N/A
2833	SUGAR MAPLE	16 6	TW	G	N	REMOVE	SIG	16	N/A	N/A
2834	SUGAR MAPLE	10 8 6	TR	G	N	REMOVE	N/A	N/A	N/A	N/A
2835	DEAD	10	TW	DEAD	N	REMOVE	N/A	N/A	N/A	N/A
2836	SUGAR MAPLE	14	S	G	N	REMOVE	SIG	14	N/A	N/A
2837	SUGAR MAPLE	14	S	G	N	REMOVE	SIG	14	N/A	N/A
2838	AMERICAN HOPHORNBEAM	10	S	G	N	REMOVE	N/A	N/A	N/A	N/A
2839	SHAGBARK HICKORY	14	S	G	N	REMOVE	SIG	14	N/A	N/A
2840	SUGAR MAPLE	18	S	G	N	REMOVE	SIG	18	N/A	N/A
2841	SUGAR MAPLE	16	S	G	N	REMOVE	SIG	16	N/A	N/A
2842	SUGAR MAPLE	14	S	G	N	REMOVE	SIG	14	N/A	N/A
2843	SHAGBARK HICKORY	12	S	G	N	REMOVE	N/A	N/A	N/A	N/A
2844	SUGAR MAPLE	14	S	G	N	REMOVE	SIG	14	N/A	N/A
2845	WHITE OAK	18	S	G	N	REMOVE	SIG	18	N/A	N/A
2846	SHAGBARK HICKORY	14	S	G	N	REMOVE	SIG	14	N/A	N/A
2847	SUGAR MAPLE	16	S	G	N	REMOVE	SIG	16	N/A	N/A
2848	AMERICAN HOPHORNBEAM	10	S	P	N	REMOVE	N/A	N/A	N/A	N/A
2849	SUGAR MAPLE	16	S	G	N	REMOVE	SIG	16	N/A	N/A
2850	SUGAR MAPLE	16	S	G	N	REMOVE	SIG	16	N/A	N/A
2851	AMERICAN BEECH	16	S	G	N	REMOVE	SIG	16	N/A	N/A
2852	RED OAK	20	S	G	N	REMOVE	SP	N/A	20	N/A
2853	RED OAK	16	S	G	N	REMOVE	SIG	16	N/A	N/A
2854	AMERICAN HOPHORNBEAM	20	S	G	N	REMOVE	PR	N/A	20	Y
2855	WHITE OAK	10	S	G	N	REMOVE	N/A	N/A	N/A	N/A
2856	RED OAK	14	S	G	N	REMOVE	SIG	14	N/A	N/A
2857	SUGAR MAPLE	12 6	TW	G	N	REMOVE	N/A	N/A	N/A	N/A
2858	SUGAR MAPLE	16 14 12 6	MU	G	N	REMOVE	SIG	30	N/A	N/A
2859	SUGAR MAPLE	10	S	G	N	REMOVE	N/A	N/A	N/A	N/A
2860	SHAGBARK HICKORY	16	S	G	N	REMOVE	SIG	16	N/A	N/A
2861	RED OAK	16 12 4	TR	G	N	REMOVE	SIG	16	N/A	N/A
2862	WHITE ASH	12 12 8 6	MU	F	N	REMOVE	N/A	N/A	N/A	N/A
2863	RED OAK	14	S	G	N	REMOVE	SIG	14	N/A	N/A
2864	RED OAK	14 6	TW	G	N	REMOVE	SIG	14	N/A	N/A
2865	AMERICAN BEECH	10	MU	G	N	REMOVE	N/A	N/A	N/A	N/A
2866	RED OAK	12	S	G	N	REMOVE	N/A	N/A	N/A	N/A
2867	RED OAK	16	S	G	N	REMOVE	SIG	16	N/A	N/A
2868	SUGAR MAPLE	14	S	G	N	REMOVE	SIG	14	N/A	N/A
2869	RED OAK	14	S	G	N	REMOVE	SIG	14	N/A	N/A
2870	RED OAK	14	S	G	N	REMOVE	SIG	14	N/A	N/A
2871	RED OAK	10	S	G	N	REMOVE	N/A	N/A	N/A	N/A
2872	RED OAK	14	S	G	N	REMOVE	SIG	14	N/A	N/A
2873	RED OAK	14	S	G	N	REMOVE	SIG	14	N/A	N/A
2874	SMOOTHBARK HICKORY	10	S	G	N	REMOVE	N/A	N/A	N/A	N/A
2875	RED OAK	16	S	G	N	REMOVE	SIG	16	N/A	N/A
2876	LARGETOOTH ASPEN	14	S	G	N	REMOVE	SIG	14	N/A	N/A
2877	RED OAK	12	S	G	N	REMOVE	N/A	N/A	N/A	N/A
2878	LARGETOOTH ASPEN	12	S	G	N	REMOVE	N/A	N/A	N/A	N/A
2879	LARGETOOTH ASPEN	10	S	G	N	REMOVE	N/A	N/A	N/A	N/A
2880	LARGETOOTH ASPEN	12	S	G	N	REMOVE	N/A	N/A	N/A	N/A
2881	RED OAK	10	S	G	N	REMOVE	N/A	N/A	N/A	N/A
2882	LARGETOOTH ASPEN	10	S	G	N	REMOVE	N/A	N/A	N/A	N/A
2883	RED OAK	14 12	TW	G	N	REMOVE	SIG	14	N/A	N/A
2884	RED OAK	10	S	G	N	REMOVE	N/A	N/A	N/A	N/A
2885	RED OAK	16 14	TW	G	N	REMOVE	SIG	30	N/A	N/A
2886	LARGETOOTH ASPEN	10	S	G	N	REMOVE	N/A	N/A	N/A	N/A
2887	RED OAK	10	S	G	N	REMOVE	N/A	N/A	N/A	N/A
2888	LARGETOOTH ASPEN	10	S	G	N	REMOVE	N/A	N/A	N/A	N/A
2889	DEAD	10	S	DEAD	N	REMOVE	N/A	N/A	N/A	N/A
2890	RED OAK	12	S	G	N	REMOVE	N/A	N/A	N/A	N/A
2891	RED OAK	12	S	G	N	REMOVE	N/A	N/A	N/A	N/A
2892	RED OAK	12	S	G	N	REMOVE	N/A	N/A	N/A	N/A
2893	RED OAK	16	S	G	N	REMOVE	SIG	16	N/A	N/A
2894	RED OAK	14 10	TW	G	N	REMOVE	SIG	14	N/A	N/A
2895	RED OAK	16	S	G	N	REMOVE	SIG	16	N/A	N/A
2896	RED OAK	10	S	G	N	REMOVE	N/A	N/A	N/A	N/A
2897	RED OAK	18	S	G	N	REMOVE	SIG	18	N/A	N/A
2898	RED OAK	20	S	G	N	REMOVE	SP	N/A	20	N/A
2899	RED OAK	16	S	G	N	REMOVE	SIG	16	N/A	N/A
2900	SUGAR MAPLE	12	S	G	N	REMOVE	N/A	N/A	N/A	N/A
2901	WHITE OAK	10	S	G	N	REMOVE	N/A	N/A	N/A	N/A
2902	RED OAK	18	S	G	N	REMOVE	SIG	18	N/A	N/A
2903	BLACK OAK	26	S	G	N	REMOVE	SP	N/A	26	N/A
2904	DEAD	10	S	DEAD	N	REMOVE	N/A	N/A	N/A	N/A
2905	BLACK OAK	14	S	G	N	REMOVE	SIG	14	N/A	N/A
2906	RED OAK	16	S	G	N	REMOVE	SIG	16	N/A	N/A
2907	RED OAK	26	S	G	N	REMOVE	SP	N/A	26	N/A
2908	RED OAK	10	S	G	N	REMOVE	N/A	N/A	N/A	N/A
2909	BLACK OAK	12	S	G	N	REMOVE	N/A	N/A	N/A	N/A
2910	BLACK OAK	12	S	G	N	REMOVE	N/A	N/A	N/A	N/A
2911	WHITE OAK	14	S	G	N	REMOVE	SIG	14	N/A	N/A
2912	RED CEDAR	12	S	G	N	REMOVE	SIG	12	N/A	N/A
2913	HONEY LOCUST	10	S	G	N	REMOVE	N/A	N/A	N/A	N/A
2914	BLACK OAK	18	S	G	N	REMOVE	SIG	18	N/A	N/A
2915	RED OAK	26	S	G	N	REMOVE	SP	N/A	26	N/A
2916	RED MAPLE	12	S	G	N	REMOVE	N/A	N/A	N/A	N/A
2917	RED OAK	24	S	G	N	REMOVE	SP	N/A	24	N/A
2918	RED OAK	16	S	G	N	REMOVE	SIG	16	N/A	N/A
2919	RED OAK	10	S	G	N	REMOVE	N/A	N/A	N/A	N/A
2920	RED OAK	18	S	G	N	REMOVE	SIG	18	N/A	N/A
2921	RED OAK	12	S	G	N	REMOVE	N/A	N/A	N/A	N/A
2922	RED OAK	12	S	G	N	REMOVE	N/A	N/A	N/A	N/A
2923	RED OAK	18	S	G	N	REMOVE	SIG	18	N/A	N/A
2924	SUGAR MAPLE	12	TW	G	N	REMOVE	N/A	N/A	N/A	N/A
2925	SUGAR MAPLE	10	S	G	N	REMOVE	N/A	N/A	N/A	N/A
2926	RED OAK	22	S	G	N	REMOVE	SP	N/A	22	N/A
2927	RED MAPLE	10	TW	G	N	REMOVE	N/A	N/A	N/A	N/A
2928	BLACK CHERRY	14	S	G	N	REMOVE	SIG	14	N/A	N/A
2929	BLACK OAK	12	S	G	N	REMOVE	N/A	N/A	N/A	N/A
2930	RED OAK	16	S	G	N	REMOVE	SIG	16	N/A	N/A
2931	RED OAK	16	S	G	N	REMOVE	SIG	16	N/A	N/A
2932	SUGAR MAPLE	12	S	G	N	REMOVE	N/A	N/A	N/A	N/A
2933	SUGAR MAPLE	10	S	G	N	REMOVE	N/A	N/A	N/A	N/A
2934	SUGAR MAPLE	26	S	G	N	REMOVE	SP	N/A	26	N/A
2935	HONEY LOCUST	18	S	G	N	REMOVE	SIG	18	N/A	N/A
2936	SUGAR MAPLE	12	S	G	N	REMOVE	N/A	N/A	N/A	N/A
2937	BLACK OAK	12	S	G	N	REMOVE	N/A	N/A	N/A	N/A
2938	SUGAR MAPLE	12	S	G	N	REMOVE	N/A	N/A	N/A	N/A
2939	WHITE OAK	16	S	G	N	REMOVE	SIG	16	N/A	N/A
2940	RED CEDAR	10	TW	G	N	REMOVE	SIG	10	N/A	N/A
2941	RED CEDAR	22	S	G	N	REMOVE	PR	N/A	22	Y
2942	RED OAK	14	S	G	N	REMOVE	SIG	14	N/A	N/A
2943	DEAD	10	S	DEAD	N	REMOVE	N/A	N/A	N/A	N/A
2944	DEAD	10	S	DEAD	N	REMOVE	N/A	N/A	N/A	N/A
2945	SUGAR MAPLE	10	S	G	N	REMOVE	N/A	N/A	N/A	N/A
2946	RED OAK	20	S	G	N	REMOVE	SP	N/A	20	N/A
2947	DEAD	14	S	DEAD	N	REMOVE	N/A	N/A	N/A	N/A
2948	RED OAK	14	S	G	N	REMOVE	SIG	14	N/A	N/A
2949	BLACK OAK	10	S	G	N	REMOVE	N/A	N/A	N/A	N/A
2950	BLACK OAK	10	S	G	N	REMOVE	N/A	N/A	N/A	N/A
2951	BLACK OAK	10	S	G	N	REMOVE	N/A	N/A	N/A	N/A
2952	BLACK OAK	12	S	G	N	REMOVE	N/A	N/A	N/A	N/A
2953	WHITE ASH	14	S	G	N	REMOVE	SIG	14	N/A	N/A
2954	DEAD	12	S	DEAD	N	REMOVE	N/A	N/A	N/A	N/A
2955	SUGAR MAPLE	10	S	G	N	REMOVE	N/A	N/A	N/A	N/A
2956	DEAD	12	S	DEAD	N	REMOVE	N/A	N/A	N/A	N/A
2957	WHITE OAK	14	S	G	N	REMOVE	SIG	14	N/A	N/A
2958	RED OAK	26	S	G	N	REMOVE	SP	N/A	26	N/A
2959	BLACK OAK	12	S	G	N	REMOVE	N/A	N/A	N/A	N/A
2960	RED OAK	14	S	G	N	REMOVE	SIG	14	N/A	N/A
2961	RED OAK	18	S	G	N	REMOVE	SIG	18	N/A	N/A
2962	RED OAK	24	S	G	N	REMOVE	SP	N/A	24	N/A
2963	SUGAR MAPLE	10	S	G	N	REMOVE	N/A	N/A	N/A	N/A
2964	BLACK OAK	10	S	G	N	REMOVE	N/A	N/A	N/A	N/A
2965	LARGETOOTH ASPEN	10	S	G	N	REMOVE	N/A	N/A	N/A	N/A
2966	WHITE ASH	10	S	G	N	REMOVE	N/A	N/A	N/A	N/A
2967	DEAD	10	S	DEAD	N	REMOVE	N/A	N/A	N/A	N/A
2968	RED MAPLE	18	S	G	N	REMOVE	SIG	18	N/A	N/A
2969	WHITE OAK	18	S	G	N	REMOVE	SIG	18	N/A	N/A
2970	SUGAR MAPLE	12	S	G	N	REMOVE	N/A	N/A	N/A	N/A
2971	SUGAR MAPLE	16	S	G	N	REMOVE	SIG	16	N/A	N/A
2972	DEAD	12	TW	DEAD	N	REMOVE	N/A	N/A	N/A	N/A
2973	DEAD	12	S	DEAD	N	REMOVE	N/A	N/A	N/A	N/A
2974	DEAD	14	TW	DEAD	N	REMOVE	N/A	N/A	N/A	N/A
2975	WHITE OAK	10	S	G	N	REMOVE	N/A	N/A	N/A	N/A
2976	WHITE OAK	14	S	G	N	REMOVE	SIG	14	N/A	N/A
2977	WHITE OAK	16	S	F	N	REMOVE	N/A	N/A	N/A	N/A
2978	RED MAPLE	10	TW	G	N	REMOVE	N/A	N/A	N/A	N/A
2979	SUGAR MAPLE	22	TW	G	N	REMOVE	SP	N/A	44	N/A
2980	SUGAR MAPLE	10	S	G	N	REMOVE	N/A	N/A	N/A	N/A
2981	SUGAR MAPLE	16	S	G	N	REMOVE	SIG	16	N/A	N/A
2982	SUGAR MAPLE	10	S	G	N	REMOVE	N/A	N/A	N/A	N/A
2983	SUGAR MAPLE	16	S	G	N	REMOVE	SIG	16	N/A	N/A
2984	NORWAY MAPLE	12	S	G	Y	REMOVE	N/A	N/A	N/A	N/A
2985	BLACK CHERRY	12	S	G	N	REMOVE	N/A	N/A	N/A	N/A
2986	NORWAY MAPLE	10	S	G	Y	REMOVE	N/A	N/A	N/A	N/A
2987	DEAD	10	S	DEAD	N	REMOVE	N/A	N/A	N/A	N/A
2988	SUGAR MAPLE	10	S	G	N	REMOVE	N/A	N/A	N/A	N/A
2989	SUGAR MAPLE	12	S	G	N	REMOVE	N/A	N/A	N/A	N/A
2990	DEAD	10	TW	DEAD	N	REMOVE	N/A	N/A	N/A	N/A
2991	CRAB APPLE	10	S	G	N	REMOVE	N/A	N/A	N/A	N/A
2992	RED OAK	10	S	G	N	REMOVE	N/A	N/A	N/A	N/A
2993	LARGETOOTH ASPEN	12	S	P	N	REMOVE	N/A	N/A	N/A	N/A
2994	WHITE OAK	10	S	G	N	REMOVE	N/A	N/A	N/A	N/A
2995	DEAD	10	S	DEAD	N	REMOVE	N/A	N/A	N/A	N/A
2996	WHITE ASH	10	S	F	N	REMOVE	N/A	N/A	N/A	N/A
2997	SUGAR MAPLE	14	S	G	N	REMOVE	SIG	14	N/A	N/A
2998	SUGAR MAPLE	18	TR	G	N	REMOVE	SIG	54	N/A	N/A
2999	SMOOTHBARK HICKORY	10	S	G	N	REMOVE	N/A	N/A	N/A	N/A
3000	SHAGBARK HICKORY	12	S	G	N	REMOVE	N/A	N/A	N/A	N/A
3001	LARGETOOTH ASPEN	10	S	G	N	REMOVE	N/A	N/A	N/A	N/A
3002	DEAD	10	S	DEAD	N	REMOVE	N/A	N/A	N/A	N/A
3003	DEAD	10	S	DEAD	N	REMOVE	N/A	N/A	N/A	N/A
3004	RED OAK	16	S	G	N	REMOVE	SIG	16	N/A	N/A
3005	BLACK OAK	16	S	G	N	REMOVE	SIG	16	N/A	N/A
3006	RED OAK	10 6	S	G	N	REMOVE	N/A	N/A	N/A	N/A
3007	BLACK CHERRY	12	S	P	N	REMOVE	N/A	N/A	N/A	N/A
3008	BLACK CHERRY	10	S	P	N	REMOVE	N/A	N/A	N/A	N/A
3009	SUGAR MAPLE	14	S	G	N	REMOVE	SIG	14	N/A	N/A
3010	BLACK CHERRY	10	S	G	N	REMOVE	N/A	N/A	N/A	N/A
3011	WHITE ASH	10	S	F	N	REMOVE	N/A	N/A	N/A	N/A
3012	SUGAR MAPLE	12	S	G	N	REMOVE	N/A	N/A	N/A	N/A
3013	SUGAR MAPLE	10	S	G	N	REMOVE	N/A	N/A	N/A	N/A
3015	RED OAK	16	S	G	N	REMOVE	SIG	16	N/A	N/A
3016	RED OAK	16	S	G	N	REMOVE	SIG	16	N/A	N/A
3017	WHITE ASH	12	S	F	N	REMOVE	N/A	N/A	N/A	N/A
3018	DEAD	12	S	DEAD	N	REMOVE	N/A	N/A	N/A	N/A
3019	RED OAK	24	S	G	N	REMOVE	SP	N/A	24	N/A
3020	SUGAR MAPLE	10	S	G	N	REMOVE	N/A	N/A	N/A	N/A
3021	BLACK CHERRY	12	S	P	N	REMOVE	N/A	N/A	N/A	N/A
3022	WHITE OAK	24	S	G	N	REMOVE	SP	N/A	24	N/A
3023	BLACK CHERRY	12	S	G	N	REMOVE	N/A	N/A	N/A	N/A
3024	BLACK CHERRY	14	S	G	N	REMOVE	SIG	14	N/A	N/A
3025	SUGAR MAPLE	10	S	G	N	REMOVE	N/A	N/A	N/A	N/A
3026	SUGAR MAPLE	10	S	G	N	REMOVE	N/A	N/A	N/A	N/A
3027	BLACK CHERRY	10	S	G	N	REMOVE	N/A	N/A	N/A	N/A
3028	WHITE ASH	10	S	F	N	REMOVE	N/A	N/A	N/A	N/A
3029	WHITE OAK	12	S	G	N	REMOVE	N/A	N/A	N/A	N/A
3030	RED MAPLE	12	S	G	N	REMOVE	N/A	N/A	N/A	N/A
3031	WHITE OAK	22	S	G	N	REMOVE	SP	N/A	22	N/A
3032	DEAD	10	S	DEAD	N	REMOVE	N/A	N/A	N/A	N/A
3033	SUGAR MAPLE	16	S	G	N	REMOVE	SIG	16	N/A	N/A
3034	RED OAK	12	S	G	N	REMOVE	N/A	N/A	N/A	N/A
3035	WHITE ASH	12	S	G	N	REMOVE	N/A	N/A	N/A	N/A
3036	DEAD	10	S	DEAD	N	REMOVE	N/A	N/A	N/A	N/A
3037	WHITE ASH	14	S	F	N	REMOVE	N/A	N/A	N/A	N/A
3038	SUGAR MAPLE	14	S	G	N	REMOVE	SIG	14	N/A	N/A
3039	BLACK CHERRY	14	S	G	N	REMOVE	SIG	14	N/A	N/A
3040	SUGAR MAPLE	10	S	G	N	REMOVE	N/A	N/A	N/A	N/A
3041	RED OAK	16	S	G	N	REMOVE	SIG	16	N/A	N/A
3042	BLACK OAK	14 10	S	G	N	REMOVE	SIG	14	N/A	N/A
3043	BLACK OAK	14 12	S	G	N	REMOVE	SIG	14	N/A	N/A

TREE CHART ABBREVIATIONS

DBH – DIAMETER BREAST HEIGHT
S – SINGLE STEM
TW – TWIN STEM
TR – TRIPLE STEM
MU – MULTI STEM
G – GOOD CONDITION
F – FAIR CONDITION
P – POOR CONDITION
C – CRITICAL CONDITION
Y – YES
N – NO
SP – SPECIMEN TREE
SIG – SIGNIFICANT TREE
PR – PROTECTED
N/A – NOT APPLICABLE

No.	Revision	Date	By
1.	REVISED PER PLANNING BOARD COMMENTS	06/19/2023	RFA

Previous Editions Obsolete

APPLICANT:
YM & YH DEVELOPERS LLC
1156 59TH STREET
BROOKLYN, NY 11219

JMC Planning, Engineering, Landscape Architecture & Land Surveying, PLLC
JMC Site Development Consultants, LLC
John Meyer Consulting, Inc.
120 BEDFORD ROAD • ARMONK, NY 10504
voice 914.273.5225 • fax 914.273.2102
www.jmcpllc.com

TREE LIST
FARRELL INDUSTRIAL PARK
ROUTE 300
TOWN OF NEWBURGH, NY

ANY ALTERATION OF PLANS, SPECIFICATIONS, PLATS AND REPORTS BEARING THE SEAL OF A LICENSED PROFESSIONAL ENGINEER OR LICENSED LAND SURVEYOR IS A VIOLATION OF ARTICLE 145 OF THE NEW YORK STATE EDUCATION LAW, EXCEPT AS PROVIDED FOR BY SECTION 7209, SUBSECTION 2.

STATE OF NEW YORK · DIEGO A. VILLAREALE · LICENSED PROFESSIONAL ENGINEER

Drawn: TC Approved: DL/JS
Scale: N.T.S
Date: 04/19/2023
Project No: 22127
22127-TREE PLAN C-025 LAY.scr
Drawing No: C-025

COPYRIGHT © 2021 by JMC. All Rights Reserved. No part of this document may be reproduced, stored in a retrieval system, or transmitted in any form or by means, electronic, mechanical, photocopying, recording or otherwise, without the prior written permission of JMC PLANNING, ENGINEERING, LANDSCAPE ARCHITECTURE & LAND SURVEYING, PLLC | JMC SITE DEVELOPMENT CONSULTANTS, LLC | JOHN MEYER CONSULTING, INC. (JMC). Any modifications or alterations to this document without the written permission of JMC shall render them invalid and unusable.

NOT FOR CONSTRUCTION

OVERALL TREE LIST

POINT #	COMMON NAME	DBH	STEMS	CONDITION	INVASIVE	STATUS	SIGNIFICANT /SPECIMEN/ PROTECTED	TOTAL CALIPER (SIGNIFICANT)	TOTAL CALIPER (SPECIMEN)	PROTECTED BIG TREE
3044	RED OAK	10	TW	G	N	REMOVE	N/A	N/A	N/A	N/A
3045	COMMON WANUT	14	S	G	N	REMOVE	SIG	14	N/A	N/A
3046	BLACK OAK	18	S	G	N	REMOVE	SIG	18	N/A	N/A
3047	RED OAK	14 12	TR	G	N	REMOVE	SIG	14	N/A	N/A
3048	BLACK CHERRY	10	S	G	N	REMOVE	N/A	N/A	N/A	N/A
3049	BLACK OAK	18	S	G	N	REMOVE	SIG	18	N/A	N/A
3050	WHITE OAK	16	S	G	N	REMOVE	SIG	16	N/A	N/A
3051	RED OAK	16	S	G	N	REMOVE	SIG	16	N/A	N/A
3052	SUGAR MAPLE	10	S	G	N	REMOVE	N/A	N/A	N/A	N/A
3053	WHITE ASH	10	S	P	N	REMOVE	N/A	N/A	N/A	N/A
3054	WHITE WALNUT	10	S	G	N	REMOVE	N/A	N/A	N/A	N/A
3055	DEAD	16	S	DEAD	N	REMOVE	N/A	N/A	N/A	N/A
3056	WHITE OAK	14	S	G	N	REMOVE	SIG	14	N/A	N/A
3057	RED CEDAR	12	S	G	N	REMOVE	SIG	12	N/A	N/A
3058	WHITE ASH	10	S	P	N	REMOVE	N/A	N/A	N/A	N/A
3059	WHITE ASH	10	S	F	N	REMOVE	N/A	N/A	N/A	N/A
3060	NORWAY MAPLE	10	S	G	Y	REMOVE	N/A	N/A	N/A	N/A
3061	DEAD	14	S	DEAD	N	REMOVE	N/A	N/A	N/A	N/A
3062	WHITE ASH	12	S	P	N	REMOVE	N/A	N/A	N/A	N/A
3063	DEAD	12	S	DEAD	N	REMOVE	N/A	N/A	N/A	N/A
3064	SUGAR MAPLE	16	S	G	N	REMOVE	SIG	16	N/A	N/A
3065	RED OAK	26	S	G	N	REMOVE	SP	N/A	26	N/A
3066	WHITE OAK	14 10	S	G	N	REMOVE	SIG	14	N/A	N/A
3067	SUGAR MAPLE	12	S	G	N	REMOVE	N/A	N/A	N/A	N/A
3068	WHITE ASH	12	S	G	N	REMOVE	N/A	N/A	N/A	N/A
3069	WHITE ASH	10	S	G	N	REMOVE	N/A	N/A	N/A	N/A
3070	SUGAR MAPLE	14	S	G	N	REMOVE	SIG	14	N/A	N/A
3071	SUGAR MAPLE	20	S	G	N	REMOVE	SP	N/A	20	N/A
3072	BLACK CHERRY	10	S	P	N	REMOVE	N/A	N/A	N/A	N/A
3073	SUGAR MAPLE	10	TW	G	N	REMOVE	N/A	N/A	N/A	N/A
3074	WHITE ASH	10	S	G	N	REMOVE	N/A	N/A	N/A	N/A
3075	SUGAR MAPLE	14	S	G	N	REMOVE	SIG	14	N/A	N/A
3076	DEAD	10	S	DEAD	N	REMOVE	N/A	N/A	N/A	N/A
3077	BLACK CHERRY	18	S	P	N	REMOVE	N/A	N/A	N/A	N/A
3078	SMOOTHBARK HICKORY	12	S	G	N	REMOVE	N/A	N/A	N/A	N/A
3079	DEAD	14	S	DEAD	N	REMOVE	N/A	N/A	N/A	N/A
3080	SUGAR MAPLE	14	S	G	N	REMOVE	SIG	14	N/A	N/A
3081	DEAD	10	S	DEAD	N	REMOVE	N/A	N/A	N/A	N/A
3082	DEAD	10	S	DEAD	N	REMOVE	N/A	N/A	N/A	N/A
3083	DEAD	10	TW	DEAD	N	REMOVE	N/A	N/A	N/A	N/A
3084	SUGAR MAPLE	14	S	G	N	REMOVE	SIG	14	N/A	N/A
3085	DEAD	10	S	DEAD	N	REMOVE	N/A	N/A	N/A	N/A
3086	DEAD	12	S	DEAD	N	REMOVE	N/A	N/A	N/A	N/A
3087	DEAD	10	S	DEAD	N	REMOVE	N/A	N/A	N/A	N/A
3088	AMERICAN ELM	10	S	F	N	REMOVE	N/A	N/A	N/A	N/A
3089	WHITE OAK	14	S	G	N	REMAIN	SIG	14	N/A	N/A
3090	SUGAR MAPLE	14	S	G	N	REMOVE	SIG	14	N/A	N/A
3091	WHITE CHERRY	10	S	G	N	REMOVE	N/A	N/A	N/A	N/A
3092	RED OAK	14	S	G	N	REMOVE	SIG	14	N/A	N/A
3093	SMOOTHBARK HICKORY	14	S	G	N	REMOVE	SIG	14	N/A	N/A
3094	WHITE OAK	10	S	G	N	REMOVE	N/A	N/A	N/A	N/A
3095	DEAD	14	S	DEAD	N	REMOVE	N/A	N/A	N/A	N/A
3096	WHITE ASH	10	S	P	N	REMOVE	N/A	N/A	N/A	N/A
3097	SUGAR MAPLE	10	S	G	N	REMOVE	N/A	N/A	N/A	N/A
3098	RED OAK	28	S	G	N	REMOVE	SP	N/A	28	N/A
3099	SUGAR MAPLE	16	S	G	N	REMOVE	SIG	16	N/A	N/A
3100	DEAD	14	S	DEAD	N	REMOVE	N/A	N/A	N/A	N/A
3101	SUGAR MAPLE	16	S	F	N	REMOVE	N/A	N/A	N/A	N/A
3102	DEAD	10	S	DEAD	N	REMOVE	N/A	N/A	N/A	N/A
3103	RED OAK	24	S	G	N	REMOVE	SP	N/A	24	N/A
3104	RED OAK	18 16	S	G	N	REMOVE	SIG	34	N/A	N/A
3105	SUGAR MAPLE	16	S	G	N	REMOVE	SIG	16	N/A	N/A
3106	SUGAR MAPLE	24	S	G	N	REMOVE	SP	N/A	24	N/A
3107	DEAD	10	S	DEAD	N	REMOVE	N/A	N/A	N/A	N/A
3108	DEAD	10	S	DEAD	N	REMOVE	N/A	N/A	N/A	N/A
3109	DEAD	16	S	DEAD	N	REMOVE	N/A	N/A	N/A	N/A
3110	DEAD	18	S	DEAD	N	REMOVE	N/A	N/A	N/A	N/A
3111	CRAB APPLE	26	S	P	N	REMOVE	PR	N/A	N/A	Y
3112	WHITE ASH	10	S	P	N	REMOVE	N/A	N/A	N/A	N/A
3113	DEAD	12	S	DEAD	N	REMOVE	N/A	N/A	N/A	N/A
3114	DEAD	10	S	DEAD	N	REMOVE	N/A	N/A	N/A	N/A
3115	RED OAK	36	S	G	N	REMOVE	SP	N/A	36	N/A
3116	SUGAR MAPLE	18	MU	G	N	REMOVE	SIG	72	N/A	N/A
3117	SUGAR MAPLE	10	S	G	N	REMOVE	N/A	N/A	N/A	N/A
3118	DEAD	22	S	DEAD	N	REMOVE	N/A	N/A	N/A	N/A
3119	SMOOTHBARK HICKORY	16	S	G	N	REMOVE	SIG	16	N/A	N/A
3120	SMOOTHBARK HICKORY	10	S	G	N	REMOVE	N/A	N/A	N/A	N/A
3121	SHAGBARK HICKORY	10	S	G	N	REMOVE	N/A	N/A	N/A	N/A
3122	BLACK OAK	16	S	G	N	REMOVE	SIG	16	N/A	N/A
3123	BLACK OAK	16	S	G	N	REMOVE	SIG	16	N/A	N/A
3124	BLACK OAK	26 20 18	S	G	N	REMOVE	SP/SIG	18	46	N/A
3125	SMOOTHBARK HICKORY	16	S	G	N	REMOVE	SIG	16	N/A	N/A
3126	DEAD	12	TR	DEAD	N	REMOVE	N/A	N/A	N/A	N/A
3127	RED OAK	18	S	G	N	REMOVE	SIG	18	N/A	N/A
3128	RED OAK	18	S	G	N	REMOVE	SIG	18	N/A	N/A
3129	BLACK OAK	12	S	G	N	REMOVE	N/A	N/A	N/A	N/A
3130	SUGAR MAPLE	12	S	G	N	REMOVE	N/A	N/A	N/A	N/A
3131	SUGAR MAPLE	12 10	S	G	N	REMOVE	N/A	N/A	N/A	N/A
3132	RED OAK	20 18	S	G	N	REMOVE	SP/SIG	18	20	N/A
3133	RED OAK	24	S	G	N	REMOVE	SP	N/A	24	N/A
3134	RED OAK	30	S	G	N	REMOVE	SP	N/A	30	N/A
3135	WHITE ASH	10	S	DEAD	N	REMOVE	N/A	N/A	N/A	N/A
3136	RED CEDAR	10	S	P	N	REMOVE	N/A	N/A	N/A	N/A
3137	BLACK CHERRY	12	S	G	N	REMOVE	N/A	N/A	N/A	N/A
3138	WHITE ASH	12	S	DEAD	N	REMOVE	N/A	N/A	N/A	N/A
3139	WHITE ASH	14	S	DEAD	N	REMOVE	N/A	N/A	N/A	N/A
3140	WILD CHERRY	10	S	G	N	REMOVE	N/A	N/A	N/A	N/A
3141	SUGAR MAPLE	16	S	G	N	REMOVE	SIG	16	N/A	N/A
3142	SMOOTHBARK HICKORY	24	S	G	N	REMOVE	PR	N/A	24	Y
3143	SUGAR MAPLE	10	S	G	N	REMOVE	N/A	N/A	N/A	N/A
3144	SUGAR MAPLE	12	S	DEAD	N	REMOVE	N/A	N/A	N/A	N/A
3145	WILD CHERRY	10	S	DEAD	N	REMOVE	N/A	N/A	N/A	N/A
3146	WHITE OAK	10	S	G	N	REMOVE	N/A	N/A	N/A	N/A
3147	WILD CHERRY	16	S	F	N	REMOVE	N/A	N/A	N/A	N/A
3148	WILD CHERRY	18 12 10	S	DEAD	N	REMOVE	N/A	N/A	N/A	N/A
3149	SUGAR MAPLE	24	S	G	N	REMOVE	SP	N/A	24	N/A
3150	SUGAR MAPLE	12	S	G	N	REMOVE	N/A	N/A	N/A	N/A
3151	SMOOTHBARK HICKORY	12	S	G	N	REMOVE	N/A	N/A	N/A	N/A
3152	SUGAR MAPLE	14	S	G	N	REMOVE	SIG	14	N/A	N/A
3153	SUGAR MAPLE	14	S	G	N	REMOVE	SIG	14	N/A	N/A
3154	SUGAR MAPLE	12	S	G	N	REMOVE	N/A	N/A	N/A	N/A
3155	SUGAR MAPLE	10	S	G	N	REMOVE	N/A	N/A	N/A	N/A
3156	WHITE ASH	10	S	DEAD	N	REMOVE	N/A	N/A	N/A	N/A
3157	SYCAMORE	12	S	G	N	REMOVE	N/A	N/A	N/A	N/A
3158	WHITE ASH	12	S	DEAD	N	REMOVE	N/A	N/A	N/A	N/A
3159	SUGAR MAPLE	14	S	G	N	REMOVE	SIG	14	N/A	N/A
3160	SUGAR MAPLE	10	S	G	N	REMOVE	N/A	N/A	N/A	N/A
3161	SUGAR MAPLE	10	S	G	N	REMOVE	N/A	N/A	N/A	N/A
3162	RED OAK	18	S	G	N	REMOVE	SIG	18	N/A	N/A
3163	RED OAK	18	S	G	N	REMOVE	SIG	18	N/A	N/A
3164	RED OAK	18	S	G	N	REMOVE	SIG	18	N/A	N/A
3165	WHITE ASH	12	S	DEAD	N	REMOVE	N/A	N/A	N/A	N/A
3166	SUGAR MAPLE	10	S	G	N	REMOVE	N/A	N/A	N/A	N/A
3167	SUGAR MAPLE	14	S	G	N	REMOVE	SIG	14	N/A	N/A
3168	WILD CHERRY	10	S	G	N	REMOVE	N/A	N/A	N/A	N/A
3169	AMERICAN HOPHORNBEAM	10	S	F	N	REMOVE	N/A	N/A	N/A	N/A
3170	RED MAPLE	12	S	G	N	REMOVE	N/A	N/A	N/A	N/A
3171	WHITE ASH	10	S	DEAD	N	REMOVE	N/A	N/A	N/A	N/A
							TOTAL:	11,224	5,340	192

TREE CHART ABBREVIATIONS

DBH – DIAMETER BREAST HEIGHT
S – SINGLE STEM
TW – TWIN STEM
TR – TRIPLE STEM
MU – MULTI STEM
G – GOOD CONDITION
F – FAIR CONDITION
P – POOR CONDITION
C – CRITICAL CONDITION
Y – YES
N – NO
SP – SPECIMEN TREE
SIG – SIGNIFICANT TREE
PR – PROTECTED
N/A – NOT APPLICABLE

SIGNIFICANT TREE REMOVAL/ANALYSIS

TOTAL ON SITE SIGNIFICANT TREE CALIPER INCHES	11,224
SIGNIFICANT TREES CALIPER INCHES TO BE REMOVED	7,292
PERCENTAGE OF SIGNIFICANT TREE CALIPER INCHES TO BE REMOVED (7,292/11,224)	64.96%*

*64.96% IS LESS THAN THE MAXIMUM PERMITTED REMOVAL OF 75% AS INDICATED IN SECTION 172–4.C. OF THE TOWN CODE. THEREFORE, NO FURTHER ACTION IS REQUIRED.

PROTECTED TREE REMOVAL/ANALYSIS

TOTAL ON SITE PROTECTED TREE CALIPER INCHES	192
PROTECTED TREES CALIPER INCHES TO BE REMOVED	132
PERCENTAGE OF PROTECTED TREE CALIPER INCHES TO BE REMOVED (132/192)	68.75%*

*68.75% IS LESS THAN THE MAXIMUM PERMITTED REMOVAL OF 75% AS INDICATED IN SECTION 172–4.C. OF THE TOWN CODE. THEREFORE, NO FURTHER ACTION IS REQUIRED.

SPECIMEN TREE REMOVAL/ANALYSIS

TOTAL ON SITE SPECIMEN TREE CALIPER INCHES	5,340
SPECIMEN TREE CALIPER INCHES TO BE REMOVED	3,476
SPECIMEN TREE CALIPER INCHES TO BE REMOVED OUTSIDE THE BUILDING AREA AND MINIMUM REQUIRED PARKING AREA	1,992*

*AS INDICATED IN TOWN CODE SECTION 172–6.B., FOR EACH ONE (1) INCH DIAMETER OF A TREE NOT WITHIN THE BUILDING AREA AND MINIMUM REQUIRED PARKING AREA, THE APPLICANT SHALL PLANT TWO (2) INCHES OF NEW TREES OR PROVIDE THE TOWN WITH $8.00 PER TWO INCHES OF NEW TREE DIAMETER THAT WOULD OTHERWISE BE REQUIRED TO BE PLANTED.

PLANT_SCHEDULE

EVERGREEN TREES	QTY	BOTANICAL NAME	COMMON NAME	SIZE	ROOT COND.	TOTAL PROPOSED CALIPER INCHES*
AB	22	Abies balsamea	Balsam Fir	10` - 12` HT	B & B	55
IO	11	Ilex opaca	American Holly	8`-10` HT	B & B	22
JV	67	Juniperus virginiana	Eastern Red Cedar	6` - 8` HT.	B & B	100.5
PA	105	Picea abies	Norway Spruce	10` - 12` HT	B & B	262.5
PG	71	Picea glauca	White Spruce	10` - 12` HT	B & B	177.5
PS	86	Pinus strobus	White Pine	10` - 12` HT	B & B	215

FLOWERING & UNDERSTORY TREES	QTY	BOTANICAL NAME	COMMON NAME	SIZE	ROOT COND.	TOTAL PROPOSED CALIPER INCHES
AC	58	Amelanchier canadensis	Shadblow	8` - 10` HT.	B & B	116
BN	51	Betula nigra	Riverbirch	10` - 12` HT	B & B	127.5
CC	32	Carpinus caroliniana	American Hornbeam	8` - 10` HT	CONT.	64
CR	22	Cercis canadensis	Redbud	8` - 10` HT	B & B	44

DECIDUOUS TREES	QTY	BOTANICAL NAME	COMMON NAME	SIZE	ROOT COND.	TOTAL PROPOSED CALIPER INCHES
ARA	44	Acer rubrum `Armstrong`	Armstrong Red Maple	3" - 3 1/2" CAL.	B & B	132
ARO	81	Acer rubrum `October Glory`	Red Maple	3" - 3 1/2" CAL.	B & B	243
LT	11	Liriodendron tulipifera	Tulip Tree	2" - 2 1/2" CAL.	B & B	22
PO2	3	Platanus occidentalis	American Sycamore	2 1/2" - 3" CAL.	B & B	7.5
PD	11	Populus deltoides	Cottonwood	2" - 2 1/2" CAL.	B & B	22
QA	6	Quercus Alba	White Oak	3"-3 1/2" Cal.	B & B	18
QM	11	Quercus macrocarpa	Burr Oak	3" - 3 1/2" CAL.	B & B	33
QP	45	Quercus Palustris	Pin Oak	3" - 3 1/2" CAL.	B & B	135
QR	26	Quercus Rubra	Red Oak	3" - 3 1/2" CAL.	B & B	78
QV	18	Quercus velutina	Black Oak	2" - 2 1/2" CAL.	B & B	36
						TOTAL: 1910.50

*CALIPER INCHES FOR TREES SPECIFIED BY HEIGHT ARE BASED UPON INDUSTRY STANDARDS AS FOLLOWS:
TREE SIZE CONVERSION GUIDE

INCHES	FEET
1.5"–2.0"	6'–8'
2.0"–2.5"	8'–10'
2.5"–3.0"	10'–12'
3.0"–3.5"	12'–14'
3.5"–4.0"	14'–16'

REFORESTATION/RESTITUTION COMPLIANCE TABLE

TREE TYPE	REQUIRED	PROVIDED
SIGNIFICANT	N/A	N/A
PROTECTED	N/A	N/A
SPECIMEN	3,984 (1)	1,910.50 (2)

(1) IN ACCORDANCE WITH TOWN CODE SECTION 172.6.B, THE APPLICANT SHALL PLANT 2 INCHES OF NEW TREES FOR EACH 1 INCH OF TREE TO BE REMOVED (1,992 X 2 = 3,984)
(2) IN ACCORDANCE WITH TOWN CODE SECTION 172–6.B., THE APPLICANT (1) WILL PAY $ 8,294.00 IN RESTITUTION TO OFFSET THE REFORESTATION REQUIREMENT AT A RATE OF $8.00 PER 2 INCHES OF TREE DIAMETER NOT PLANTED. (3,984 –1,910.5 = 2,073.50) (2,073.50/2 = 1,036.75) (1,036.75 X 8 = $8,294).

No.	Revision	Date	By
1.	REVISED PER PLANNING BOARD COMMENTS	06/19/2023	RFA

Previous Editions Obsolete

APPLICANT:
YM & YH DEVELOPERS LLC
1156 59TH STREET
BROOKLYN, NY 11219

JMC Planning, Engineering, Landscape Architecture & Land Surveying, PLLC
JMC Site Development Consultants, LLC
John Meyer Consulting, Inc.
120 BEDFORD ROAD • ARMONK, NY 10504
voice 914.273.5225 • fax 914.273.2102
www.jmcpllc.com

JMC

TREE LIST
FARRELL INDUSTRIAL PARK
ROUTE 300
TOWN OF NEWBURGH, NY

ANY ALTERATION OF PLANS, SPECIFICATIONS, PLATS AND REPORTS BEARING THE SEAL OF A LICENSED PROFESSIONAL ENGINEER OR LICENSED LAND SURVEYOR IS A VIOLATION OF ARTICLE 145 OF THE NEW YORK STATE EDUCATION LAW, EXCEPT AS PROVIDED FOR BY SECTION 7209, SUBSECTION 2.

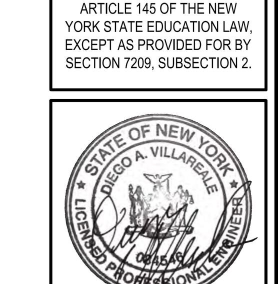

Drawn:	TC	Approved:	DL/JS
Scale:	N.T.S		
Date:	04/19/2023		
Project No:	22127		
22127-TREE PLAN	C-026	LAY.scr	

Drawing No:
C–026

COPYRIGHT © 2021 by JMC All Rights Reserved. No part of this document may be reproduced, stored in a retrieval system, or transmitted in any form or by means, electronic, mechanical, photocopying, recording or otherwise, without the prior written permission of JMC PLANNING, ENGINEERING, LANDSCAPE ARCHITECTURE & LAND SURVEYING, PLLC | JMC SITE DEVELOPMENT CONSULTANTS, LLC | JOHN MEYER CONSULTING, INC. (JMC). Any modifications or alterations to this document without the written permission of JMC shall render them invalid and unusable.

NOT FOR CONSTRUCTION

TREE PRESERVATION PLAN

FARRELL INDUSTRIAL PARK
ROUTE 300
TOWN OF NEWBURGH, NY

JMC Planning, Engineering, Landscape Architecture & Land Surveying, PLLC
JMC Site Development Consultants, LLC
120 BEDFORD ROAD • ARMONK, NY 10504
voice 914.273.5225 • fax 914.273.2102
www.jmcpllc.com

APPLICANT:
YM & YH DEVELOPERS LLC
1156 59TH STREET
BROOKLYN, NY 11219

No.	Revision	Date	By
1.	REVISED PER PLANNING BOARD COMMENTS	06/19/2023	RFA

Preview Edition Deletable

Drawn:	TC
Approved:	DL/JS
Scale:	1" = 30'
Date:	04/19/2023
Project No:	22127
2021 TREE PLAN	C-030
Drawing No:	C-030
	DEIS Set

ANY ALTERATION OF PLANS, SPECIFICATIONS, PLATS AND REPORTS BEARING THE SEAL OF A LICENSED PROFESSIONAL ENGINEER OR LICENSED LAND SURVEYOR IS A VIOLATION OF ARTICLE 145 OF THE NEW YORK STATE EDUCATION LAW, EXCEPT AS PROVIDED FOR IN SECTION 7209, SUBSECTION 2.

NEW YORK STATE OF LICENSED PROFESSIONAL ENGINEER

LEGEND

- EXISTING PROPERTY LINE
- EXISTING PROPERTY LINE (SEE EXISTING CONDITIONS)
- EXISTING PROPERTY LINE (SEE LAYOUT PLAN)
- EXISTING PROPERTY LINE (SEE GRADING PLAN)
- EXISTING TREE AND DESIGNATION
- EXISTING TREE TO BE REMOVED
- EXISTING TREE TO BE PROTECTED
- EXISTING PROPERTY LINE

NOTES:

1. EXISTING CONDITIONS DEPICTED ON THIS PLAN HAVE BEEN TAKEN FROM SURVEY TITLED "TOPOGRAPHIC SURVEY OF PROPERTY", PREPARED BY JMC, DATED 07/11/2019.

MATCHLINE SEE SHEET C-030

MATCHLINE SEE SHEET C-031

LIMIT OF BUILDING AND MINIMUM PARKING AREA

N/F FARRELL BUILDING COMPANY INC SECTION 34 BLOCK 2 LOT 45

N/F THOMAS A. LUCEY SECTION 35 BLOCK 3 LOT 19

N/F STORAGE STOP 8, LLC SECTION 34 BLOCK 1 LOT 79

N/F ANTHONY M. FORESTIERE SECTION 34 BLOCK 2 LOT 44

NY 300

ASPHALT SURFACE OF NEXT LINE PER MAP REFERENCE #1

C099160147 © 2020 by JMC. All rights reserved. No part of this publication may be reproduced, stored in a retrieval system, or transmitted, in any form or by any means, electronic, mechanical, recording or otherwise, without the prior written permission of JMC. Unauthorized use of this publication is a violation of applicable laws. JMC SITE DEVELOPMENT CONSULTANTS, LLC | 2 DUTCH BROADWAY | SUITE 200 | OLD TAPPAN | NJ | 07675 | 201.750.1852

SEE PLAN C-030 FOR CORRESPONDING LEGEND & NOTES

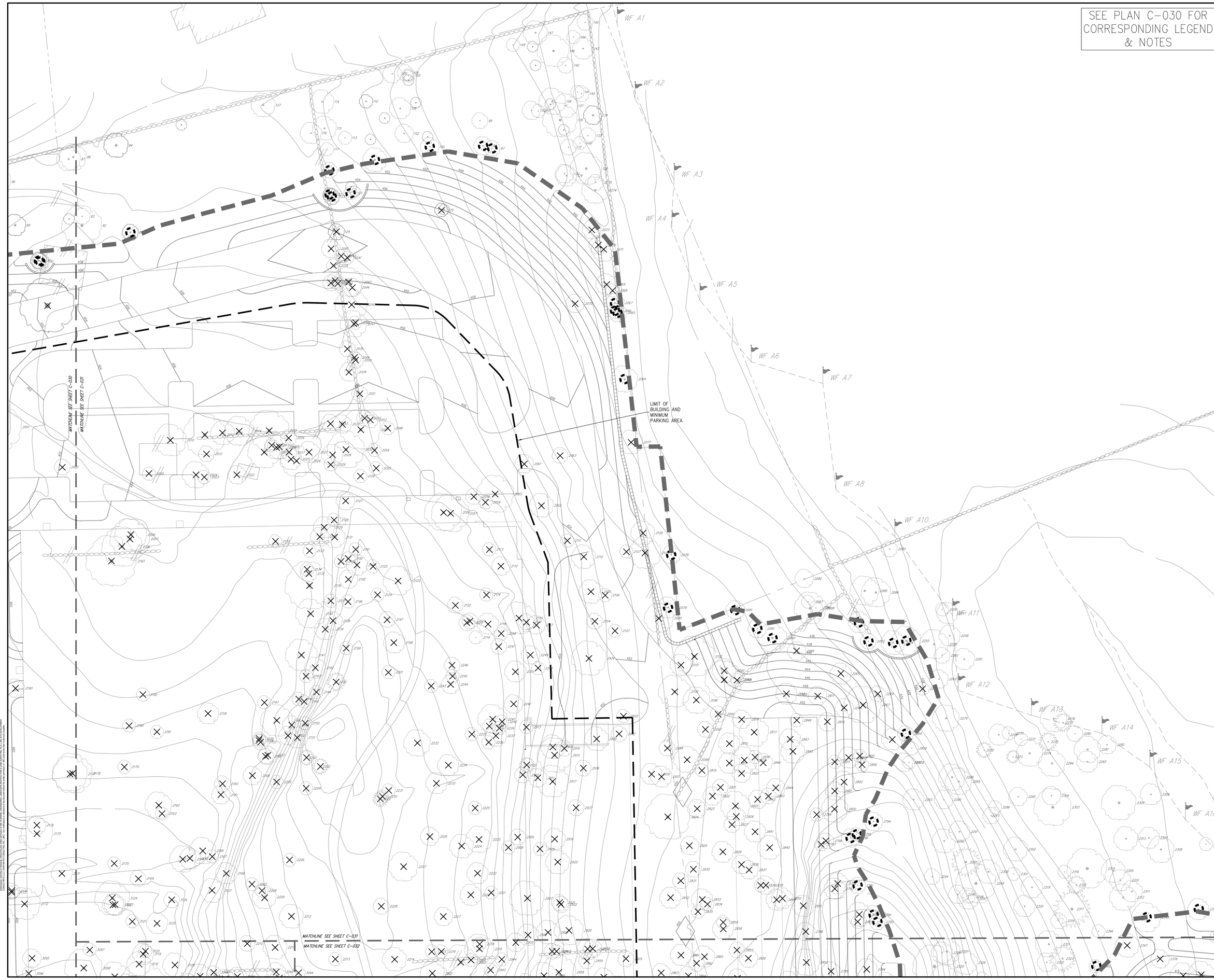

No.	Revision	Date	By
1.	REVISED PER PLANNING BOARD COMMENTS	06/19/2023	RFA

Previous Editions Obsolete

APPLICANT:

YM & YH DEVELOPERS LLC
1156 59TH STREET
BROOKLYN, NY 11219

JMC Planning, Engineering, Landscape Architecture & Land Surveying, PLLC
JMC Site Development Consultants, LLC
John Meyer Consulting, Inc.
120 BEDFORD ROAD • ARMONK, NY 10504
voice 914.273.5225 • fax 914.273.2102
www.jmcpllc.com

JMC

TREE SURVEY
FARRELL INDUSTRIAL PARK

FARRELL INDUSTRIAL PARK
ROUTE 300
TOWN OF NEWBURGH, NY

ANY ALTERATION OF PLANS, SPECIFICATIONS, PLATS AND REPORTS BEARING THE SEAL OF A LICENSED PROFESSIONAL ENGINEER OR LICENSED LAND SURVEYOR IS A VIOLATION OF ARTICLE 145 OF THE NEW YORK STATE EDUCATION LAW, EXCEPT AS PROVIDED FOR BY SECTION 7209, SUBSECTION 2.

STATE OF NEW YORK
DIEGO A. VILLARELLE
LICENSED PROFESSIONAL ENGINEER

Drawn:	TC	Approved:	DL/JS
Scale:	1" = 30'		
Date:	04/19/2023		
Project No:	22127		
22127-TREE PLAN	C-031	EXIST.scr	
Drawing No:	C-031		

COPYRIGHT © 2023 by JMC All rights reserved. No part of this document may be reproduced, stored in a retrieval system, or transmitted in any form or by means, electronic, mechanical, photocopying, recording or otherwise, without the prior written consent of JMC PLANNING, ENGINEERING, LANDSCAPE ARCHITECTURE & LAND SURVEYING, PLLC, JMC SITE DEVELOPMENT CONSULTANTS, LLC, JOHN MEYER CONSULTING, INC. (JMC). Any modifications or alterations to this document without the written permission of JMC shall render them invalid and unusable.

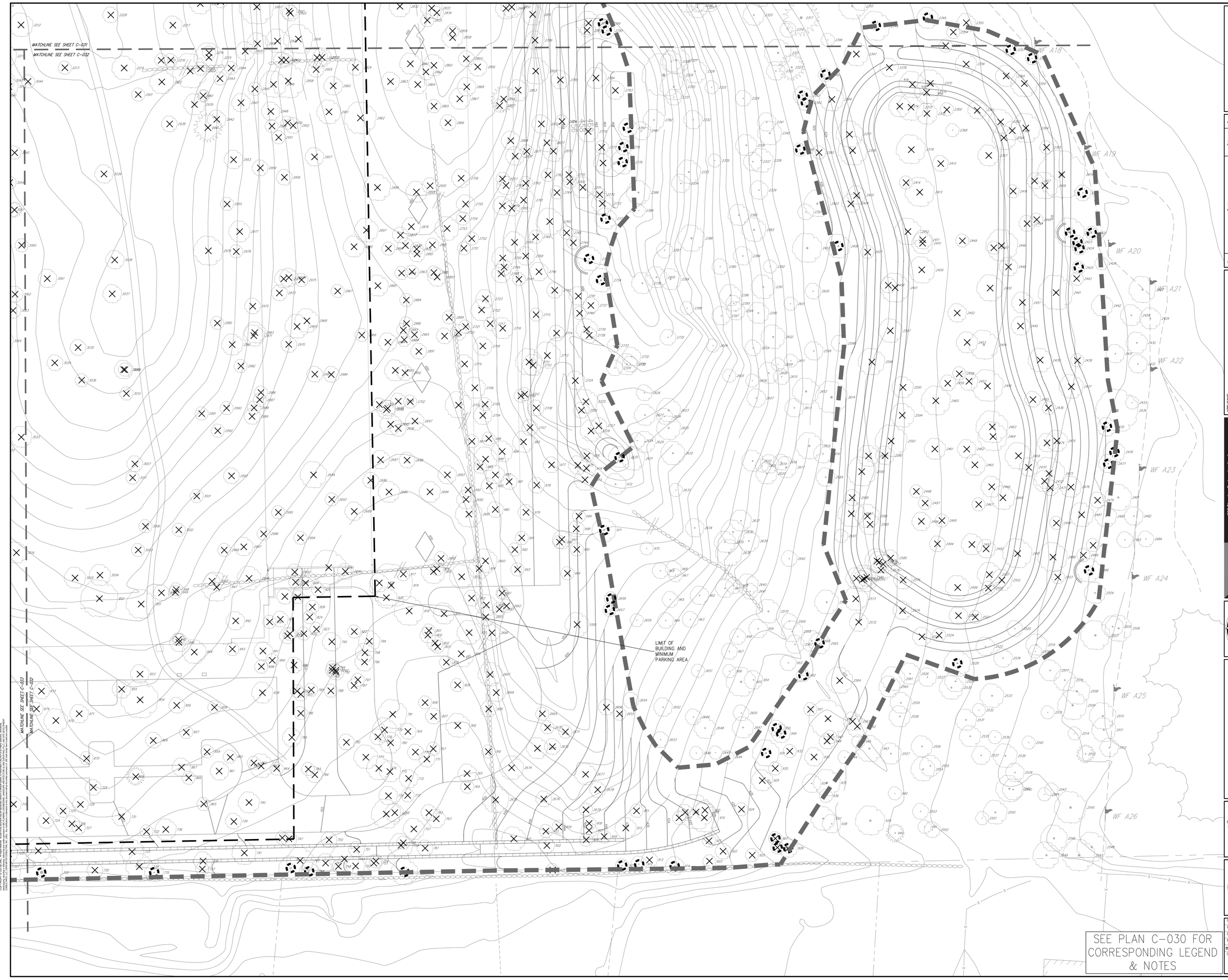

SEE PLAN C-030 FOR CORRESPONDING LEGEND & NOTES

No.	Revision	Date	By
1.	REVISED PER PLANNING BOARD COMMENTS	06/19/2023	RFA

Previous Editions Obsolete

APPLICANT:

YM & YH DEVELOPERS LLC
1156 59TH STREET
BROOKLYN, NY 11219

JMC Planning, Engineering, Landscape Architecture & Land Surveying, PLLC
JMC Site Development Consultants, LLC
John Meyer Consulting, Inc.
120 BEDFORD ROAD • ARMONK, NY 10504
voice 914.273.5225 • fax 914.273.2102
www.jmcpllc.com

JMC

TREE PROTECTION PLAN

FARRELL INDUSTRIAL PARK
ROUTE 300
TOWN OF NEWBURGH, NY

ANY ALTERATION OF PLANS, SPECIFICATIONS, PLATS AND REPORTS BEARING THE SEAL OF A LICENSED PROFESSIONAL ENGINEER OR LICENSED LAND SURVEYOR IS A VIOLATION OF ARTICLE 145 OF THE NEW YORK STATE EDUCATION LAW, EXCEPT AS PROVIDED FOR BY SECTION 7209, SUBSECTION 2.

STATE OF NEW YORK
DIEGO A. VILLARELLE
LICENSED PROFESSIONAL ENGINEER

Drawn:	TC	Approved:	DL/JS
Scale:	1" = 30'		
Date:	04/19/2023		
Project No:	22127		
22127-TREE PLAN	C-032	EXIST.scr	
Drawing No:	C-032		

MATCHLINE SEE SHEET C-030
MATCHLINE SEE SHEET C-033

MATCHLINE SEE SHEET C-030
MATCHLINE SEE SHEET C-033

MATCHLINE SEE SHEET C-031
MATCHLINE SEE SHEET C-032

MATCHLINE SEE SHEET C-033
MATCHLINE SEE SHEET C-032

LIMIT OF BUILDING AND MINIMUM PARKING AREA

SEE PLAN C-030 FOR CORRESPONDING LEGEND & NOTES

COPYRIGHT © 2023 by JMC - All rights reserved. No part of this document may be reproduced, stored in a retrieval system, or transmitted in any form or by means, electronic, mechanical, photocopying, recording, or otherwise, without the prior written permission of JMC. Unauthorized use of this document in violation of applicable laws, including copyright laws, may subject the violator to civil and criminal penalties. ANY ALTERATION OF PLANS, SPECIFICATIONS, PLATS AND REPORTS BEARING THE SEAL OF A LICENSED PROFESSIONAL ENGINEER OR LICENSED LAND SURVEYOR IS A VIOLATION OF ARTICLE 145 OF THE NEW YORK STATE EDUCATION LAW, EXCEPT AS PROVIDED FOR BY SECTION 7209, SUBSECTION 2.

No.	Revision	Date	By
1.	REVISED PER PLANNING BOARD COMMENTS	06/19/2023	RFA

Previous Editions Obsolete

APPLICANT:
YM & YH DEVELOPERS LLC
1156 59TH STREET
BROOKLYN, NY 11219

JMC Planning, Engineering, Landscape Architecture & Land Surveying, PLLC
JMC Site Development Consultants, LLC
John Meyer Consulting, Inc.
120 BEDFORD ROAD • ARMONK, NY 10504
voice 914.273.5225 • fax 914.273.2102
www.jmcpllc.com

JMC

TREE PROTECTION PLAN

FARRELL INDUSTRIAL PARK
ROUTE 300
TOWN OF NEWBURGH, NY

ANY ALTERATION OF PLANS, SPECIFICATIONS, PLATS AND REPORTS BEARING THE SEAL OF A LICENSED PROFESSIONAL ENGINEER OR LICENSED LAND SURVEYOR IS A VIOLATION OF ARTICLE 145 OF THE NEW YORK STATE EDUCATION LAW, EXCEPT AS PROVIDED FOR BY SECTION 7209, SUBSECTION 2.

STATE OF NEW YORK — DIEGO A. VILLANUEVA — 090 — LICENSED PROFESSIONAL ENGINEER

Drawn:	TC	Approved:	DL/SS
Scale:	1" = 30'		
Date:	04/19/2023		
Project No:	22127		
22127-TREE PLAN	C-033	EXIST.dgn	

Drawing No:
C-033

SIGN TABLE

DESIGNATION NUMBER	SIGN	SIZE	DESCRIPTION	MOUNTING TYPE	MOUNTING HEIGHT	REGULATORY	RETROREFLECTED
A	STOP	30"X30"	WHITE ON RED	STEEL CHANNEL	7'-0"	R1-1	X
B	RESERVED PARKING	12"X18"	GREEN & BLUE ON WHITE	STEEL CHANNEL	7'-0"	R7-8	X
C	NO PARKING ANY TIME	12"X18"	RED ON WHITE	STEEL CHANNEL	7'-0"	R7-1 (MODIFIED)	X
D		30"X30" 24"X12"	BLACK ON YELLOW	STEEL CHANNEL	7'-0"	W11-2 W16-7PL	X
E	NO ENGINE BRAKE	18"X24"	BLACK ON WHITE	STEEL CHANNEL	7'-0"	R4-2 (MODIFIED)	X
F	ELECTRIC VEHICLE CHARGING STATION	12"X18"	WHITE ON GREEN	STEEL CHANNEL	7'-0"		X

LEGEND

- EXISTING PROPERTY LINE
- ADJACENT PROPERTY LINE
- EXISTING SETBACK LINE
- EXISTING WETLAND LINE AND DELINEATION (WF-A3 / WF-A4 / WF-A5)
- EXISTING BUILDING LINE
- EXISTING PAVEMENT EDGE
- EXISTING CURB LINE
- EXISTING STONE WALL
- EXISTING GUIDE RAIL
- EXISTING FENCE
- EXISTING UTILITY POLE
- EXISTING SIGN
- EXISTING TREE AND DESIGNATION (TYP. M)
- EXISTING TREELINE
- PROPOSED BUFFER LINE
- PROPOSED BUILDING LINE
- PROPOSED CONCRETE CURB
- PROPOSED MOUNTABLE CURB
- PROPOSED PARKING SPACES WITH NUMBER OF SPACES INDICATED (REFER TO STRIPING DETAILS) (5)
- PROPOSED CONCRETE SIDEWALK
- PROPOSED LIGHT DUTY SITE PAVEMENT
- PROPOSED HEAVY DUTY SITE PAVEMENT
- NYSDOT FULL DEPTH PAVEMENT
- PROPOSED CONCRETE PAVEMENT
- PROPOSED RETAINING WALL WITH 42"H. SAFETY FENCE (DESIGN BY OTHERS)
- PROPOSED 2'-4" WIDE YELLOW LINES 8" O.C. (Y)
- PROPOSED 24" WIDE WHITE STOP LINE
- PROPOSED GUIDE RAIL
- PROPOSED ARROW MARKING ON PAVEMENT
- PROPOSED DIRECTIONAL FLOW ARROWS (NOT PAVEMENT MARKINGS)
- PROPOSED TRAFFIC SIGN LOCATION & DESIGNATION (42)
- PROPOSED POLE MOUNTED SITE LIGHTING
- PROPOSED BUILDING MOUNTED SITE LIGHTING

NOTES:

1. EXISTING CONDITIONS DEPICTED HEREON HAVE BEEN TAKEN FROM SURVEY TITLED, "TOPOGRAPHIC SURVEY OF PROPERTY," PREPARED BY JMC ENGINEERING, LANDSCAPE ARCHITECTURE & LAND SURVEYING, PLLC., LAST REVISED 08/09/2021. CONTRACTOR SHALL SATISFY HIM/HERSELF AS TO THE ACCURACY OF THE EXISTING INFORMATION SHOWN HEREON AND IDENTIFY ANY DISCREPANCIES PRIOR TO THE ISSUANCE OF A BID.
2. EXISTING WETLANDS WERE DELINEATED BY ECOLOGICAL SOLUTIONS, LLC IN ACCORDANCE WITH THE ARMY CORPS OF ENGINEERS (USACE) WETLANDS DELINEATION MANUAL (JANUARY 1987), ROUTINE DETERMINATION METHOD AND NORTHCENTRAL/NORTHEAST SUPPLEMENT. THE WETLANDS WERE DELINEATED ON MARCH 26, 2019 AS DESCRIBED IN THE REPORT ENTITLED "WETLAND DELINEATION", SEPTEMBER 21, 2020.
3. PROPOSED OFFICE SPACE SHALL NOT EXCEED 15% OF THE TOTAL FLOOR AREA FOR THE WAREHOUSE. FINAL FLOOR PLAN SHALL BE SUBJECT TO APPROVAL OF THE BUILDING CODE OFFICIAL.
4. ALL EMERGENCY ACCESS GATES SHALL HAVE ELECTRONIC KEYPAD FOR OPERATION AND ACCESS CODES SHALL BE PROVIDED TO ALL EMERGENCY PERSONEL. KEYPAD SPECIFICATIONS SHALL BE CONFIRMED PRIOR TO ISSUANCE OF A BUILDING PERMIT.

No.	Revision	Date	By
1.	REVISED PEP PLANNING BOARD COMMENTS	06/19/2023	RFA

Previous Editions Obsolete

APPLICANT:

YM & YH DEVELOPERS LLC
1156 55TH STREET
BROOKLYN, NY 11219

JMC Planning, Engineering, Landscape Architecture & Land Surveying, PLLC
JMC Site Development Consultants, LLC
John Meyer Consulting, Inc.
120 BEDFORD ROAD • ARMONK, NY 10504
voice 914.273.5225 • fax 914.273.2102
www.jmcpllc.com

LAYOUT PLAN

FARRELL INDUSTRIAL PARK
ROUTE 300
TOWN OF NEWBURGH, NY

ANY ALTERATION OF PLANS, SPECIFICATIONS, PLATS AND REPORTS BEARING THE SEAL OF A LICENSED PROFESSIONAL ENGINEER OR LICENSED LAND SURVEYOR IS A VIOLATION OF SECTION 7209 OF THE NEW YORK STATE EDUCATION LAW, EXCEPT AS PROVIDED FOR BY SECTION 7209, SUBSECTION 2.

STATE OF NEW YORK — DIEGO A. VILLANUEVA — 090191 — LICENSED PROFESSIONAL ENGINEER

Drawn:	TC	Approved:	DL/JS
Scale:	1" = 50'		
Date:	04/19/2023		
Project No:	22127		
22127-LAYOUT	LAYOUT	LAY.tcr	
Drawing No:	C-100		

NOT FOR CONSTRUCTION

COPYRIGHT © 2023 by JMC. All Rights Reserved. No part of this document may be reproduced, stored in a retrieval system, or transmitted in any form, electronic, mechanical, photocopying, recording, or otherwise, without the prior written permission of JMC. Unauthorized alteration to this document or the removal of JMC's name from this document is prohibited. (NYS Education Law, Section 7209, Subdivision 2)

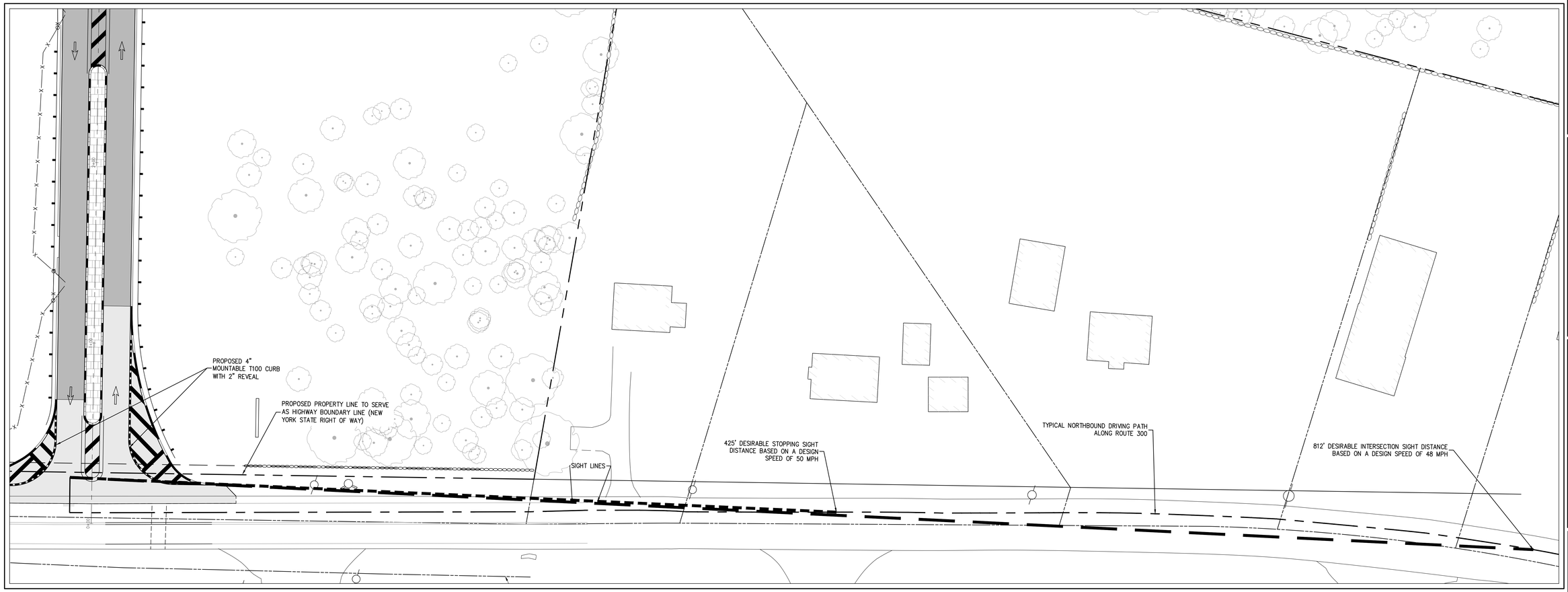

RIGHT TURN (LOOKING LEFT)

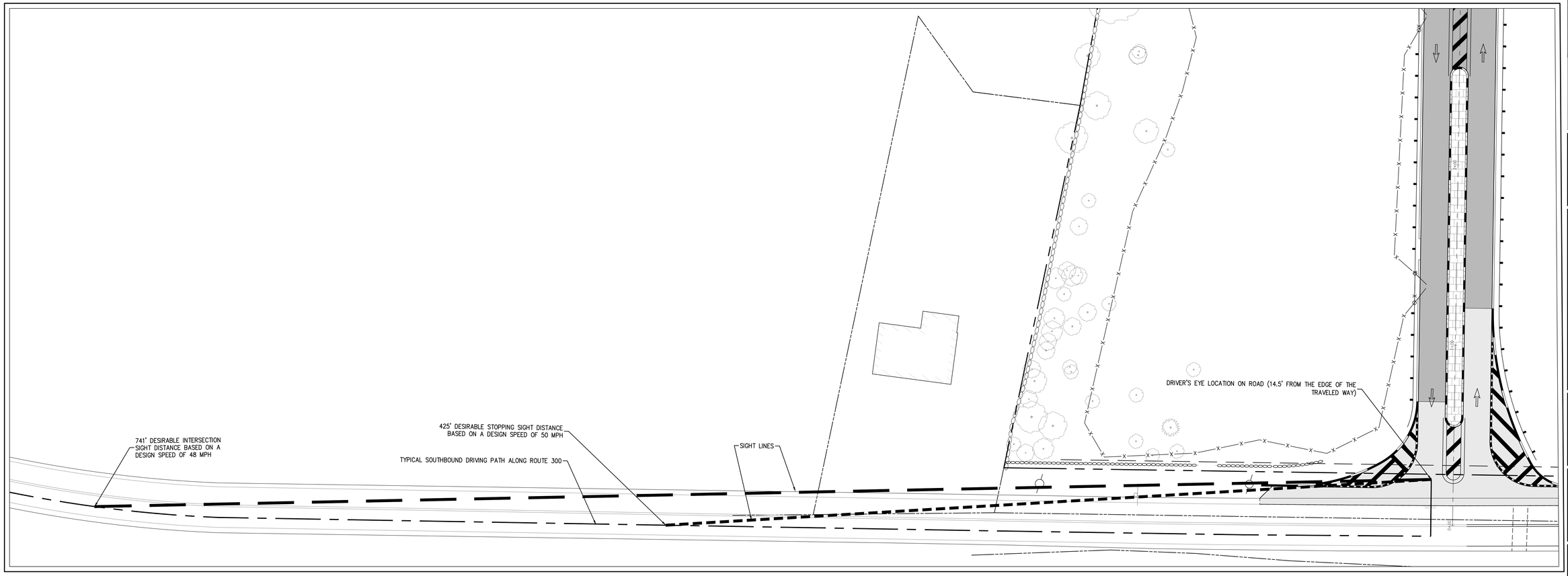

LEFT TURN (LOOKING RIGHT)

No.	Revision	Date	By
1.	REVISED PER PLANNING BOARD COMMENTS	06/19/2023	RFA

Previous Editions Obsolete

APPLICANT:
YM & YH DEVELOPERS LLC
1156 59TH STREET
BROOKLYN, NY 11219

JMC Planning, Engineering, Landscape Architecture & Land Surveying, PLLC
JMC Site Development Consultants, LLC
John Meyer Consulting, Inc.
120 BEDFORD ROAD • ARMONK, NY 10504
voice 914.273.5225 • fax 914.273.2102
www.jmcpllc.com

JMC

SIGHT DISTANCE PLAN

FARRELL INDUSTRIAL PARK
ROUTE 300
TOWN OF NEWBURGH, NY

ANY ALTERATION OF PLANS, SPECIFICATIONS, PLATS AND REPORTS BEARING THE SEAL OF A LICENSED PROFESSIONAL ENGINEER OR LICENSED LAND SURVEYOR IS A VIOLATION OF SECTION 7209 OF THE NEW YORK STATE EDUCATION LAW, EXCEPT AS PROVIDED FOR BY SECTION 7209, SUBSECTION 2.

STATE OF NEW YORK
DIEGO A. VILLAREALE
LICENSED PROFESSIONAL ENGINEER

Drawn:	TC	Approved:	DL/JS
Scale:	1" = 20'		
Date:	04/19/2023		
Project No:	22127		
22127-LAYOUT	SIGHT DIST.	LAY.scr	
Drawing No:	C-101		

NOT FOR CONSTRUCTION

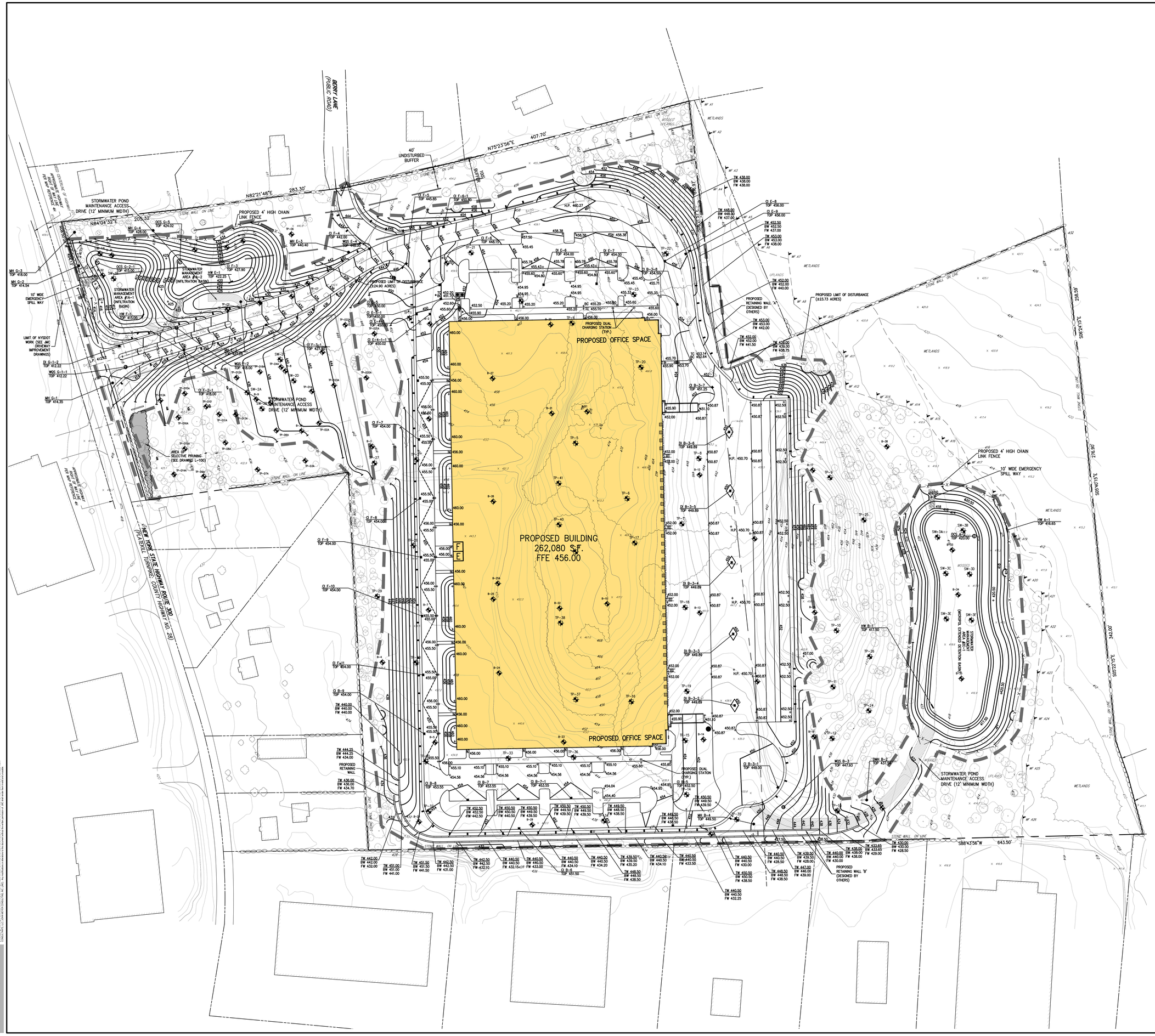

LEGEND

- EXISTING PROPERTY LINE
- ADJACENT PROPERTY LINE
- EXISTING EASEMENT LINE
- EXISTING WETLAND LINE AND DELINEATION
- EXISTING BUILDING LINE
- EXISTING PAVEMENT EDGE
- EXISTING CURB LINE
- EXISTING CONTOUR
- EXISTING INDEX CONTOUR
- EXISTING STONE WALL
- EXISTING FENCE
- EXISTING DRAIN INLET
- EXISTING MANHOLE
- EXISTING FIRE HYDRANT
- EXISTING UTILITY POLE
- EXISTING SIGN
- PROPOSED BUILDING LINE
- PROPOSED CONCRETE CURB
- PROPOSED CONCRETE SIDEWALK
- PROPOSED FINISHED GRADE
- PROPOSED SPOT GRADE
- PROPOSED TYPE CI DRAIN INLET
- PROPOSED TYPE DI DRAIN INLET
- PROPOSED RETAINING WALL WITH 4FT. SAFETY FENCE (DESIGN BY OTHERS)
- PROPOSED TEST LOCATIONS

NOTES:

1. EXISTING CONDITIONS DEPICTED HEREON HAVE BEEN TAKEN FROM SURVEY TITLED, "TOPOGRAPHIC SURVEY OF PROPERTY," PREPARED BY JMC ENGINEERING, LANDSCAPE ARCHITECTURE & LAND SURVEYING, PLLC., LAST REVISED 08/09/2021. CONTRACTOR SHALL SATISFY HIM/HERSELF AS TO THE ACCURACY OF THE EXISTING INFORMATION SHOWN HEREON AND IDENTIFY ANY DISCREPANCIES PRIOR TO THE ISSUANCE OF A BID.
2. EXISTING WETLANDS WERE DELINEATED BY ECOLOGICAL SOLUTIONS, LLC IN ACCORDANCE WITH THE ARMY CORPS OF ENGINEERS (USACE) WETLANDS DELINEATION MANUAL (JANUARY 1987), ROUTINE DETERMINATION METHOD AND NORTHCENTRAL/NORTHEAST SUPPLEMENT. THE WETLANDS WERE DELINEATED ON MARCH 26, 2019 AS DESCRIBED IN THE REPORT ENTITLED "WETLAND DELINEATION", SEPTEMBER 21, 2020.
3. GEOTECHNICAL BORING/TEST PIT LOCATIONS DEPICTED ON THIS PLAN WERE TAKEN FROM THE GEOTECHNICAL REPORT ENTITLED, "REPORT ON SUBSURFACE SOIL AND FOUNDATION INVESTIGATION", DATED 10/14/2020, PREPARED BY CARLIN-SIMPSON AND ASSOCIATES, SUPPLEMENTED BY LOCATIONS OBSERVED BY JMC EMPLOYEES AND LOCATED USING GPS COORDINATES.

TEST LOCATION LABELS LEGEND

B-X	BORING LOCATION/DESIGNATION
TP-X	TEST PIT LOCATION/DESIGNATION
SW-X	STORMWATER TEST LOCATION/DESIGNATION
TP-CX	CIVIL ENGINEER TEST PIT/PERCOLATION TEST LOCATION/DESIGNATION
TP-DX	SEPTIC SYSTEM PERCOLATION TEST LOCATION/DESIGNATION

TEST LOCATION LEGEND NOTES:

A. BORINGS, TEST PITS AND STORMWATER TESTS WERE PERFORMED BY CARLIN-SIMPSON AND ASSOCIATES. THE CIVIL ENGINEER TEST PITS/INFILTRATION TESTS WERE PERFORMED BY JMC, PLLC TO ACQUIRE

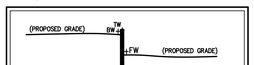

RETAINING WALL SPOT GRADE LEGEND

No.	Revision	Date	By
1.	REVISED PEP PLANNING BOARD COMMENTS	06/19/2023	RFA

APPLICANT:

YM & YH DEVELOPERS LLC
115 6TH STREET
BROOKLYN, NY 11219

JMC Planning, Engineering, Landscape Architecture & Land Surveying, PLLC
JMC Site Development Consultants, LLC
John Meyer Consulting, Inc.
120 BEDFORD ROAD • ARMONK, NY 10504
voice 914.273.5225 • fax 914.273.2102
www.jmcpllc.com

JMC

GRADING PLAN

FARRELL INDUSTRIAL PARK
ROUTE 300
TOWN OF NEWBURGH, NY

ANY ALTERATION OF PLANS, SPECIFICATIONS, PLATS AND REPORTS BEARING THE SEAL OF A LICENSED PROFESSIONAL ENGINEER OR LICENSED LAND SURVEYOR IS A VIOLATION OF SECTION 7209 OF THE NEW YORK STATE EDUCATION LAW, EXCEPT AS PROVIDED FOR BY SECTION 7209, SUBSECTION 2.

STATE OF NEW YORK — DIEGO A. VILLAMIZAR — LICENSED PROFESSIONAL ENGINEER

Drawn:	DK
Approved:	DL/JS
Scale:	1" = 50'
Date:	04/19/2023
Project No:	22127
22127-GRAD	GRAD
GRAD.scr	
Drawing No:	C-200

NOT FOR CONSTRUCTION

COPYRIGHT © 2019 by JMC - all rights reserved. No part of this document may be reproduced, stored in a retrieval system, or transmitted, in any form or by means, electronic, mechanical, photocopying, recording, or otherwise, without the prior written permission of JMC. Any unauthorized use or alteration of this document will be at the user's sole risk and without liability to JMC. Any modifications or alterations to this document will void the seal and certification of JMC and will be the sole responsibility of the user.

DISTRIBUTION OF THIS DRAWING IN PDF, DWG, DXF, OR ANY OTHER ELECTRONIC FORMAT IS FOR CONVENIENCE ONLY. ONLY HARD COPIES BEARING ORIGINAL SIGNATURE AND SEAL SHALL BE CONSIDERED TO BE "CONTRACT DOCUMENTS". CONSTRUCTION CO. SHALL NOTIFY ENGINEER IN WRITING OF ANY DISCREPANCIES BETWEEN THE CONTRACT DOCUMENTS AND THE ELECTRONIC FILES PRIOR TO BEGINNING ANY WORK. ENGINEER SHALL NOT BE RESPONSIBLE FOR ANY CHANGES MADE TO THE ELECTRONIC FILES AFTER THEY HAVE BEEN RELEASED.

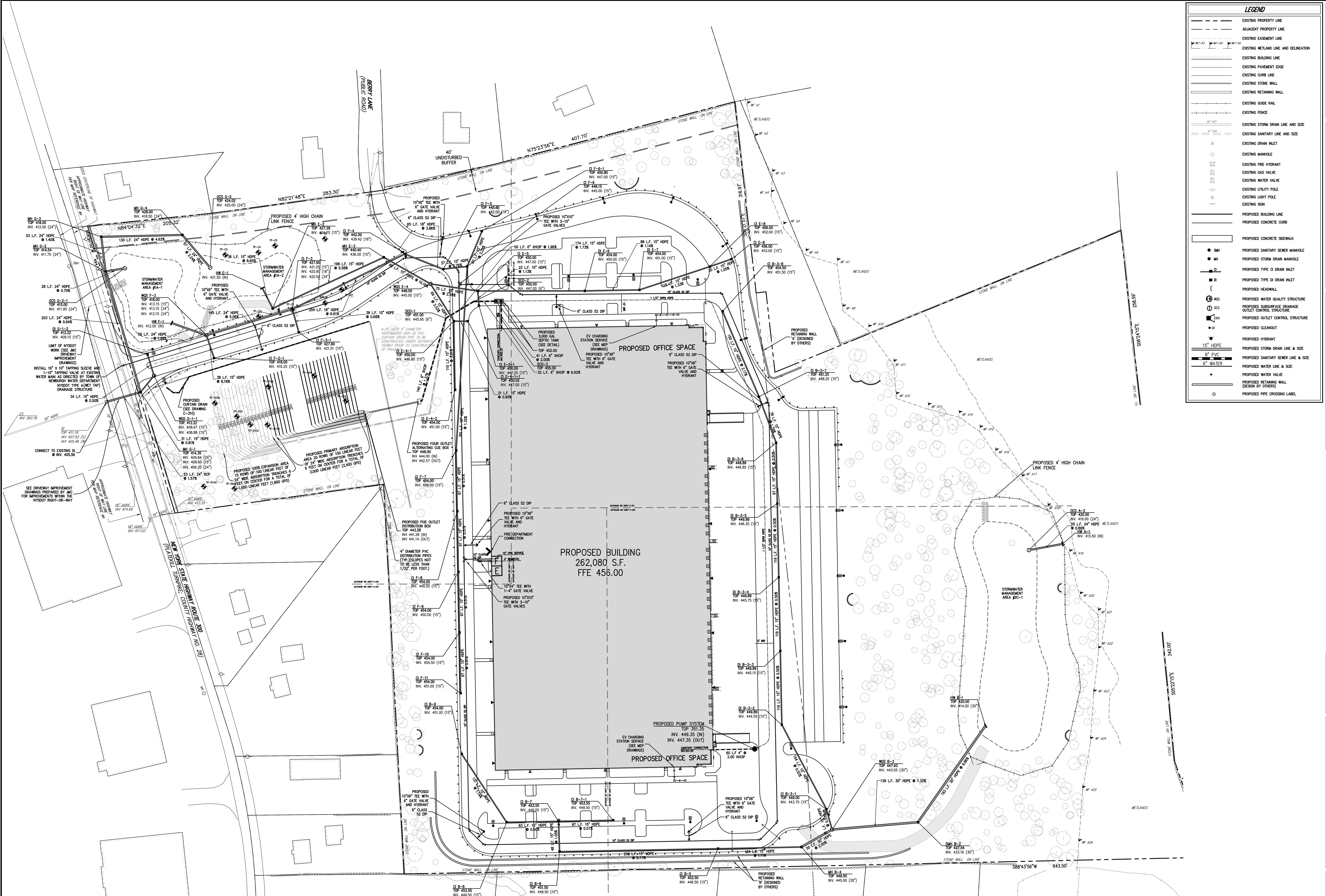

NOTES:

1. EXISTING CONDITIONS DEPICTED HEREON HAVE BEEN TAKEN FROM SURVEY TITLED, "TOPOGRAPHIC SURVEY OF PROPERTY," PREPARED BY JMC ENGINEERING, LANDSCAPE ARCHITECTURE & LAND SURVEYING, PLLC., LAST REVISED 08/09/2021. CONTRACTOR SHALL SATISFY HIM/HERSELF AS TO THE ACCURACY OF THE EXISTING INFORMATION SHOWN HEREON AND IDENTIFY ANY DISCREPANCIES PRIOR TO THE ISSUANCE OF A BID.
2. ALL STORMWATER MANAGEMENT PRACTICES SHALL REMAIN UNDISTURBED AND BE PROTECTED FROM HEAVY MACHINERY TRAFFIC DURING CONSTRUCTION. HOWEVER DURING CONSTRUCTION OF THE PRACTICE THE CONTRACTOR SHALL MINIMIZE AND AVOID HEAVY MACHINERY TRAFFIC TO THE MAXIMUM EXTENT PRACTICABLE. THERE SHALL BE NO STORAGE OF MATERIALS WITHIN AREAS TO BE USED FOR STORMWATER MANAGEMENT PRACTICES. THE CONTRACTOR SHALL INSTALL CONSTRUCTION FENCE AROUND THE PRACTICE TO DISCOURAGE VEHICLE TRAFFIC.
3. UNLESS OTHERWISE SPECIFIED, PIPE FOR STORM DRAINS SHALL BE HIGH DENSITY POLYETHYLENE PIPE (HDPE) WITH A SMOOTH INTERIOR AND ANNULAR EXTERIOR CORRUGATIONS IN ACCORDANCE WITH ASTM F-2648. JOINTS SHALL BE WATERTIGHT IN ACCORDANCE WITH ASTM D-3212.
4. UNLESS OTHERWISE SPECIFIED, PIPE FOR WATER LINES SHALL BE DOUBLE CEMENT-LINED DUCTILE IRON PIPE (DIP), CLASS 52, WITH MECHANICAL JOINTS IN ACCORDANCE WITH AWWA C-150, C-151, C-104 AND C-111
5. ELECTRIC, TELEPHONE, FIRE ALARM AND CABLE TELEVISION LINES SHALL BE INSTALLED UNDERGROUND IN CONDUIT IN ACCORDANCE WITH THE REQUIREMENTS OF THE UTILITY COMPANY HAVING JURISDICTION.
6. CONSTRUCTION OF POTABLE WATER UTILITIES AND CONNECTION TO THE TOWN OF NEWBURGH WATER SYSTEM REQUIRES A PERMIT FROM THE TOWN OF NEWBURGH WATER DEPARTMENT. ALL REQUIREMENTS SHALL CONFORM TO THE REQUIREMENTS OF THE NEW YORK STATE DEPARTMENT OF HEALTH AND THE TOWN OF NEWBURGH.
7. THRUST RESTRAINT OF THE PIPE SHALL BE THROUGH THE USE OF JOINT RESTRAINT. THRUST BLOCKS ARE NOT ACCEPTABLE. JOINT RESTRAINT SHALL BE THROUGH THE USE OF MECHANICAL JOINT PIPE WITH RETAINER GLANDS. ALL FITTINGS AND VALVES SHALL ALSO BE INSTALLED WITH RETAINER GLANDS FOR JOINT RESTRAINT. RETAINER GLANDS SHALL BE EBBA IRON MEGALUG SERIES 1100 OR APPROVED EQUAL. THE USE OF A MANUFACTURED RESTRAINED JOINT PIPE IS ACCEPTABLE WITH PRIOR APPROVAL OF THE WATER DEPARTMENT.
8. ALL FITTINGS SHALL BE CAST IRON OR DUCTILE IRON, MECHANICAL JOINT, CLASS 250 AND CONFORM TO ANSI/AWWA C110/A21.10-87 OR LATEST REVISION FOR DUCTILE AND GRAY IRON FITTINGS OR ANSI/AWA C153/A21.53-94 FOR LATEST REVISION FOR DUCTILE IRON COMPACT FITTINGS.
9. ALL VALVES SHALL BE RESILIENT WEDGE, MECHANICAL JOINT GATE VALVES CONFORMING TO ANSI/AWWA C509 OR LATEST REVISION SUCH AS MUELLER A-2360-23 OR APPROVED EQUAL. ALL GATE VALVES SHALL OPEN LEFT (COUNTER CLOCK WISE).
10. TAPPING SLEEVE SHALL BE MECHANICAL JOINT SUCH AS MUELLER H-615 OR EQUAL. TAPPING VALVE SHALL BE RESILIENT WEDGE GATE VALVES CONFORMING TO ANSI/AWWA C509 SUCH AS MUELLER MODEL T-2360-19 OR APPROVED EQUAL. ALL TAPPING SLEEVES AND VALVES SHALL BE TESTED TO 150 PSI MINIMUM; TESTING OF THE TAPPING SLEEVE AND VALVE MUST BE WITNESSED AND ACCEPTED BY THE TOWN OF NEWBURGH WATER DEPARTMENT PRIOR TO CUTTING INTO THE PIPE.
11. ALL WATER SERVICE LINES TWO (2) INCHES IN DIAMETER AND SMALLER SHALL BE TYPE K COPPER TUBING. CORPORATION STOPS SHALL BE MUELLER H-15020 FOR ¾ AND 1 INCH, MUELLER H-15000 OR B-25000 FOR 1 ½ OR 2 INCH SIZES. CURB VALVES SHALL BE MUELLER H-1501-2 FOR ¾ AND 1 INCH AND MUELLER B-25204 FOR 1 ½ AND 2 INCH SIZES. CURB BOXES S HALL BE MUELLER H-10312 FOR ¾ AND 1 INCH AND MUELLER H-10310 FOR 1 ½ AND 2 INCH SIZES.
12. ALL PIPE INSTALLATION SHALL BE SUBJECT TO INSPECTION BY THE TOWN OF NEWBURGH WATER DEPARTMENT. THE CONTRACTOR SHALL BE RESPONSIBLE FOR COORDINATING ALL INSPECTIONS AS REQUIRED WITH THE TOWN OF NEWBURGH WATER DEPARTMENT.
13. THE WATER MAIN SHALL BE TESTED, DISINFECTED AND FLUSHED IN ACCORDANCE WITH THE TOWN OF NEWBURGH REQUIREMENTS. ALL TESTING, DISINFECTION AND FLUSHING SHALL BE COORDINATED WITH THE TOWN OF NEWBURGH WATER DEPARTMENT. PRIOR TO PUTTING THE WATER MAIN IN SERVICE, SATISFACTORY SANITARY RESULTS FROM A NEW YORK STATE CERTIFIED LAB MUST BE SUBMITTED TO THE TOWN OF NEWBURGH WATER DEPARTMENT. THE TEST SAMPLES MUST BE COLLECTED BY A REPRESENTATIVE OF THE TESTING LABORATORY AND WITNESSED BY THE WATER DEPARTMENT.
14. THRUST RESTRAINT SHALL BE PROVIDED BY THE RODS AND RETAINER GLANDS. THE LENGTH OF RESTRAINED PIPE SHALL BE DETERMINED BASED UPON WORKING PRESSURES, SOIL CONDITIONS AND DEPTH OF BURY ACCORDING TO DIPPA STANDARDS.
15. PRESSURE AND LEAKAGE TESTS ARE REQUIRED AND SHALL BE DONE IN ACCORDANCE WITH AWWA C-600 STANDARDS
16. THE FINAL LAYOUT OF THE PROPOSED WATER CONNECTION, INCLUDING ALL MATERIALS, SIZE AND LOCATION OF SERVICE AND ALL APPURTENANCES, IS SUBJECT TO THE REVIEW AND APPROVAL OF THE TOWN OF NEWBURGH WATER DEPARTMENT. NO PERMITS SHALL BE ISSUED FOR A WATER CONNECTION UNTIL A FINAL LAYOUT IS APPROVED BY THE RESPECTIVE DEPARTMENT.
17. THIS PROJECT HAS INDICATED THE INTENT TO PROVIDE ADEQUATE FIRE FLOW BY THE PROPOSED INSTALLATION OF SPRINKLER SYSTEMS MEETING NFPA REQUIREMENTS, AND IS; THEREFORE, EXEMPT FROM THE NEEDED FIRE FLOW GUIDELINES OF THE INSURANCE SERVICES OFFICE (ISO). THE PROPOSED SPRINKLER SYSTEM DESIGN HAS NOT BEEN EVALUATED BY THE ORANGE COUNTY DEPARTMENT OF HEALTH FOR COMPLIANCE WITH NFPA REQUIREMENTS.
18. BACKFLOW PREVENTION DEVICES FOR BOTH THE 4" DOMESTICS AND 6" FIRE SERVICES TO BE APPROVED BY OCDOH AND ARE DESIGNED BY OTHERS UNDER A SEPARATE APPLICATION. BACKFLOW PREVENTION DEVICES WILL BE LOCATED IN THE BUILDING, APPLICATION FOR APPROVAL SHALL BE SUBMITTED UNDER SEPARATE COVER BY THE MECHANICAL ENGINEER/ARCHITECT.
19. THE CONTRACTOR SHALL PROVIDE ALL NECESSARY EQUIPMENT AND SHALL PERFORM ALL WORK REQUIRED IN CONNECTION WITH ALL THE TESTS AS SPECIFIED HEREIN. ALL PIPE SHALL BE TESTED BY HYDROSTATIC PRESSURE, FIFTY (50) PERCENT IN EXCESS OF THE NORMAL PSI WORKING PRESSURE BUT NOT LESS THAN 150 PSI OR MORE THAN THE DESIGN RATING OF THE PIPE APPURTENANCES, IN ACCORDANCE WITH AWWA SPECIFICATION C-600. THE TEST SHALL BE DETERMINED BY THE WATER AUTHORITY AND/OR OWNER'S FIELD REPRESENTATIVE. EACH SECTION TESTED SHALL BE SLOWLY FILLED WITH WATER, CARE BEING TAKEN TO EXPEL ALL AIR FROM THE PIPES. IF NECESSARY, THE PIPES SHALL BE TAPPED AT HIGH POINTS TO VENT THE AIR. REQUIRED PRESSURE, AS MEASURED AT THE POINT OF LOWEST ELEVATION, SHALL BE APPLIED FOR NOT LESS THAN TWO (2) HOURS, AND ALL PIPE, FITTINGS, VALVES, HYDRANTS AND JOINTS SHALL BE CAREFULLY EXAMINED FOR DEFECTS. LEAKY JOINTS SHALL BE MADE WATERTIGHT.
20. IF THE SECTION BEING TESTED SHALL FAIL TO PASS THE PRESSURE TEST OR THE LEAKAGE TEST, OR BOTH, THE CONTRACTOR SHALL DO EVERYTHING NECESSARY TO LOCATE, UNCOVER, AND REPAIR OR REPLACE THE DEFECTIVE PIPE, FITTINGS OR JOINTS, AND ALL SUCH WORK SHALL BE DONE AT HIS EXPENSE AND AT NO ADDITIONAL COST TO THE OWNER.
21. IN THE EVENT OF CONFLICT BETWEEN THE TESTS SPEICIFED HEREIN AND THE TEST REQUIREMENTS OF THE TOWN OF NEWBURGH WATER DISTRICT, HEALTH DEPARTMENT OR ANY OTHER AUTHORITY HAVING JURISDICTION OVER ALL OR ANY PORTION OF THE WATER LINES INSTALLED UNDER THIS CONTRACT, THE MORE RESTRICTIVE REQUIREMENTS SHALL GOVERN.
22. AFTER THE WATER LINE HAS PASSED THE REQUIRED PRESSURE AND LEAKAGE TESTS AND BEFORE BEING PLACED INTO SERVICE, THE ENTIRE LINE SHALL BE DISINFECTED. ALL DISINFECTING METHODS AND MATERIALS SHALL BE IN ACCORDANCE WITH AWWA SPECIFICATION C-651. ALL DISINFECTION OPERATIONS AND PROCEDURES SHALL MEET WITH THE APPROVAL OF THE WATER AUTHORITY AND HEALTH DEPARTMENT.
23. IF THE INITIAL BACTERIOLOGICAL TESTS ARE NOT SATISFACTORY, THE CONTRACTOR SHALL DO EVERYTHING NECESSARY TO OBTAIN SATISFACTORY BACTERIOLOGICAL TESTS, INCLUDING MAKING PROVISIONS TO ISOLATE SHORTER SECTIONS OF LINE TO LOCATE THE SOURCE OF CONTAMINATION. ALL WORK NECESSARY AND REQUIRED TO OBTAIN SATISFACTORY BACTERIOLOGICAL TESTS SHALL BE AT THE CONTRACTORS EXPENSE AND AT NO ADDITIONAL COST TO THE OWNER.
24. THE DESIGN, CONSTRUCTION AND INSTALLATION OF THE WATER MAINS SHALL BE IN ACCORDANCE WITH THIS PLAN AND GENERALLY ACCEPTED STANDARDS IN AFFECT AT THE TIME OF CONSTRUCTION WHICH INCLUDE:
    "RECOMMENDED STANDARDS FOR WATER WORKS (TEN STATES)"
    "RURAL WATER SUPPLY, NEW YORK STATE DEPARTMENT OF HEALTH"
    "NEW YORK STATE DEPARTMENT OF HEALTH AND ORANGE COUNTY DEPARTMENT OF HEALTH POLICIES, PROCEDURES, AND STANDARDS."
25. UPON COMPLETION OF THE FACILITIES, THE FINISHED WORKS SHALL BE INSPECTED, TESTED, AND CERTIFIED COMPLETE BY THE PROFESSIONAL ENGINEER SUPERVISING CONSTRUCTION. NO PART OF THE FACILITIES SHALL BE PLACED INTO SERVICE UNTIL ACCEPTED BY THE PROFESSIONAL ENGINEER.
26. ALL WATER DISTRIBUTION SYSTEM PIPES AND APPURTENANCES SHALL CONFORM TO CURRENT TOWN OF NEWBURGH STANDARDS.
27. UNDER INDUSTRIAL CODE 753, THE CONTRACTOR SHALL BE REQUIRED TO NOTIFY ALL OPERATORS OF UTILITIES LISTED ON THE CURRENT "MASTER LIST OF OPERATORS" ON FILE WITH THE CENTRAL REGISTRY AS WELL AS THE TOWN OF NEWBURGH AND NYSDOT PRIOR TO THE START OF THIS WORK SO THAT ALL THE VARIOUS UNDERGROUND UTILITY OPERATORS WILL BE ABLE TO LOCATE AND MARK THE LOCATIONS OF THEIR OWN UTILITIES. NO WORK SHALL COMMENCE UNTIL ALL THE OPERATORS HAVE NOTIFIED THE CONTRACTOR THAT THEIR UTILITIES HAVE BEEN LOCATED
28. THE CONTRACTOR SHALL BE RESPONSIBLE FOR THE PRESERVATION OF ALL PUBLIC AND PRIVATE UNDERGROUND AND SURFACE UTILITIES AND STRUCTURES AT OR ADJACENT TO THE SITE OF CONSTRUCTION, INSOFAR AS THEY MAY BE ENDANGERED BY HIS OPERATIONS. THIS SHALL HOLD TRUE WHETHER OR NOT THEY ARE SHOWN ON THE CONTRACT DRAWINGS. IF THEY ARE SHOWN ON THE DRAWINGS, THEIR LOCATIONS ARE NOT GUARANTEED EVEN THOUGH THE INFORMATION WAS OBTAINED FROM THE BEST AVAILABLE SOURCES. THE CONTRACTOR SHALL, AT HIS OR HER OWN EXPENSE, REPAIR OR REPLACE ANY STRUCTURES OR UTILITIES THAT HE OR SHE DAMAGES, AND SHALL CONSTANTLY PROCEED WITH CAUTION TO PREVENT UNDUE INTERRUPTION TO UTILITY SERVICE.
29. POTABLE WATER PIPE NETWORKS MUST BE IN COMPLIANCE WITH THE "NO LEAD LAW", THE AMENDMENT TO THE SAFE DRINKING WATER ACT WHICH PROHIBITS THE USE OF BRASS PRODUCTS CONTAINING MORE THAN 0.25% LEAD. THE WATER SERVICE INSTALLATION MUST ALSO COMPLY WITH THE "NO LEAD LAW" THAT WENT INTO EFFECT JANUARY 4, 2014.
30. HYDRANT DRAINS ARE TO BE PLUGGED IF GROUNDWATER IS EXPECTED WITHIN 2' OR LESS BELOW BASE. WHEN DRAINS ARE PLUGGED, THE BARRELS MUST BE PUMPED OUT AFTER USE AND THESE HYDRANTS MUST BE MARKED/LABELED TO INDICATE AS SUCH.
31. REFER TO DRAWING C-310 FOR SANITARY SEWER DESIGN AND CONSTRUCTION REQUIREMENTS. THIS PLAN IS PROVIDED TO THE OCHD WITH THE SEWAGE DISPOSAL SYSTEM DOCUMENTS FOR REFERENCE ONLY.
32. THIS PLAN IS PROVIDED TO THE OCHD WITH THE PRIVATE WATERMAIN EXTENSION DOCUMENTS FOR REVIEW AND APPROVAL OF THE WATERMAIN EXTENSION ONLY. ALL NOTES, DETAILS, AND SPECIFICATIONS PERTAINING TO THE SANITARY SEWAGE SYSTEM, STORM DRAINAGE SYSTEM, AND OTHER UTILITIES ARE NOT FOR OCHD REVIEW OR APPROVAL.

COPYRIGHT © 2021 by JMC All Rights Reserved. No part of this document may be reproduced, stored in a retrieval system, or transmitted in any form or by means, electronic, mechanical, photocopying, recording or otherwise, without the prior written permission of JMC PLANNING, ENGINEERING, LANDSCAPE ARCHITECTURE & LAND SURVEYING, PLLC | JMC SITE DEVELOPMENT CONSULTANTS, LLC | JOHN MEYER CONSULTING, INC. (JMC). Any modifications or alterations to this document without the written permission of JMC shall render them invalid and unusable.

No.	Revision	Date	By
1.	REVISED PER PLANNING BOARD COMMENTS	06/19/2023	RFA

APPLICANT:
YM & YH DEVELOPERS LLC
1156 59TH STREET
BROOKLYN, NY 11219

JMC Planning, Engineering, Landscape Architecture & Land Surveying, PLLC
JMC Site Development Consultants, LLC
John Meyer Consulting, Inc.
120 BEDFORD ROAD • ARMONK, NY 10504
voice 914.273.5225 • fax 914.273.2102
www.jmcpllc.com

UTILITIES PLAN

FARRELL INDUSTRIAL PARK
ROUTE 300
TOWN OF NEWBURGH, NY

ANY ALTERATION OF PLANS, SPECIFICATIONS, PLATS AND REPORTS BEARING THE SEAL OF A LICENSED PROFESSIONAL ENGINEER OR LICENSED LAND SURVEYOR IS A VIOLATION OF SECTION 7209 OF THE NEW YORK STATE EDUCATION LAW, EXCEPT AS PROVIDED FOR BY SECTION 7209, SUBSECTION 2.

STATE OF NEW YORK · DIEGO A. VILLAREALE · LICENSED PROFESSIONAL ENGINEER

Drawn: TC	Approved: DL/JS
Scale: 1" = 50'	
Date: 04/19/2023	
Project No: 22127	
22127-UTIL	UTIL / UTIL.scr

Drawing No: C-300
(OCDOH SEWAGE DISPOSAL SHEET 3 OF 5)
(OCDOH WATERMAIN EXTENSION SHEET 2 OF 4)

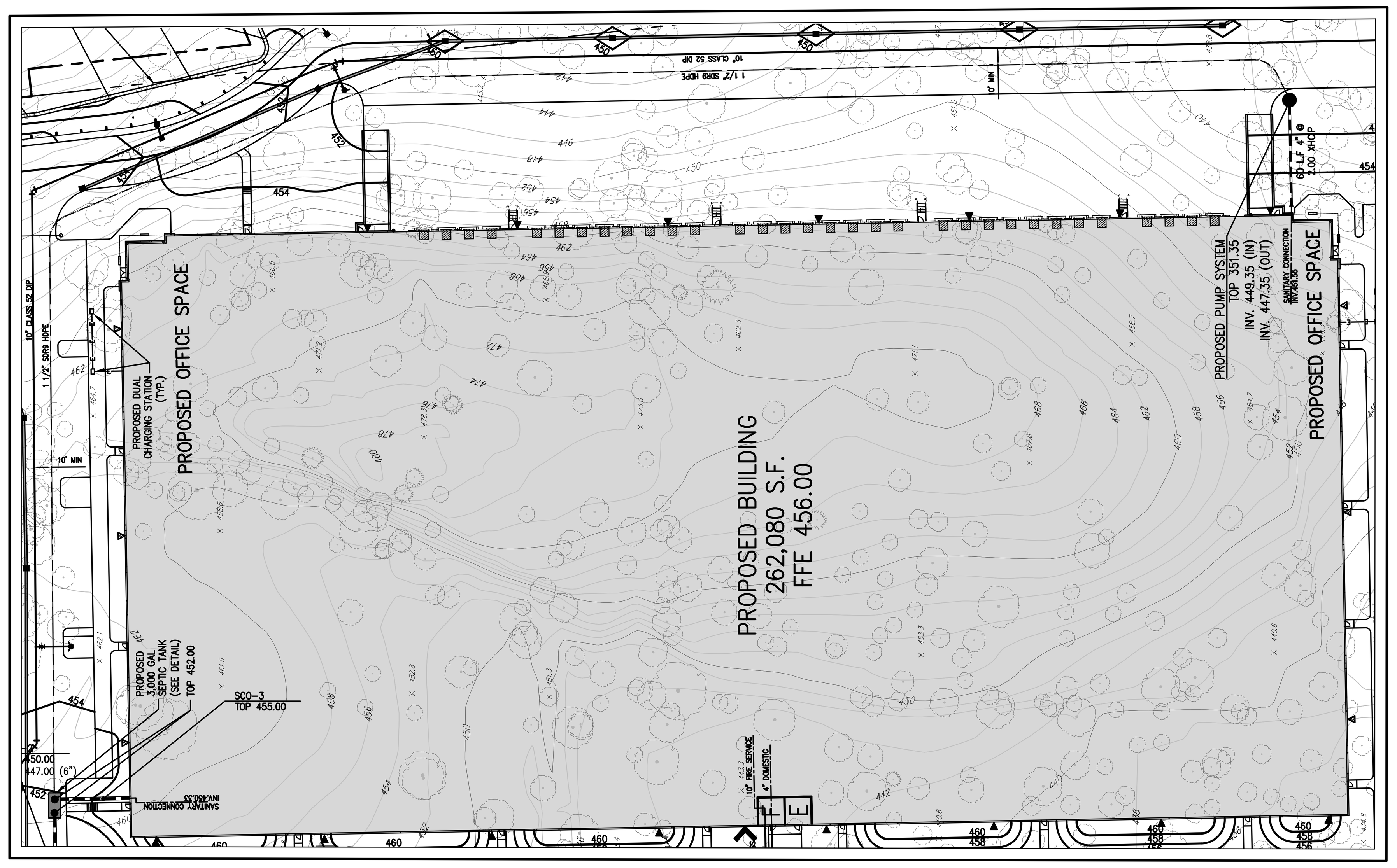

FORCE MAIN DETAIL PLAN

1" = 50'

SEE OWTS DETAIL PLAN

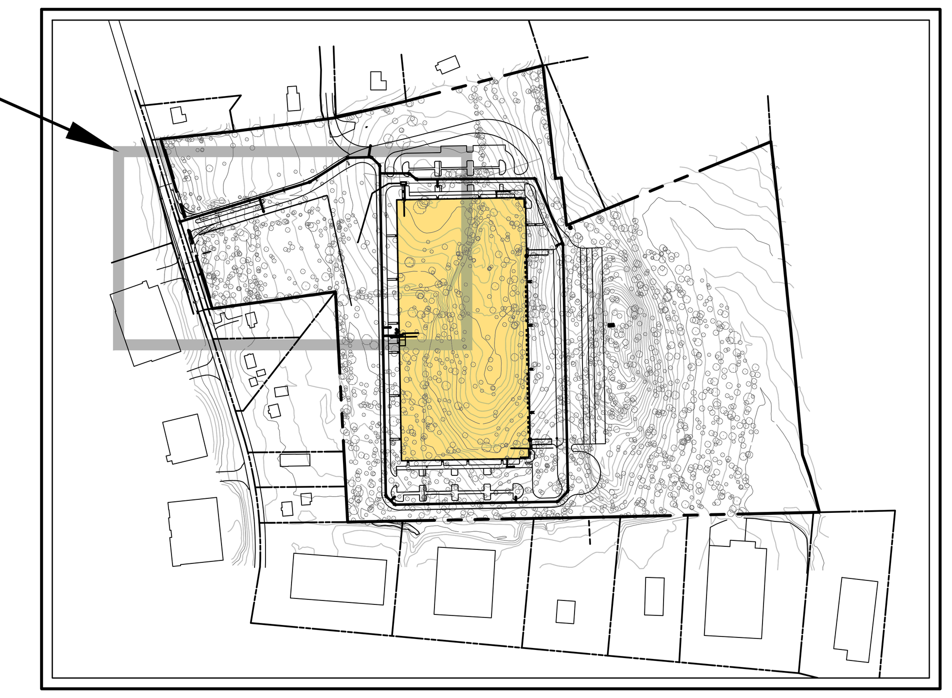

KEY MAP

1" = 300'

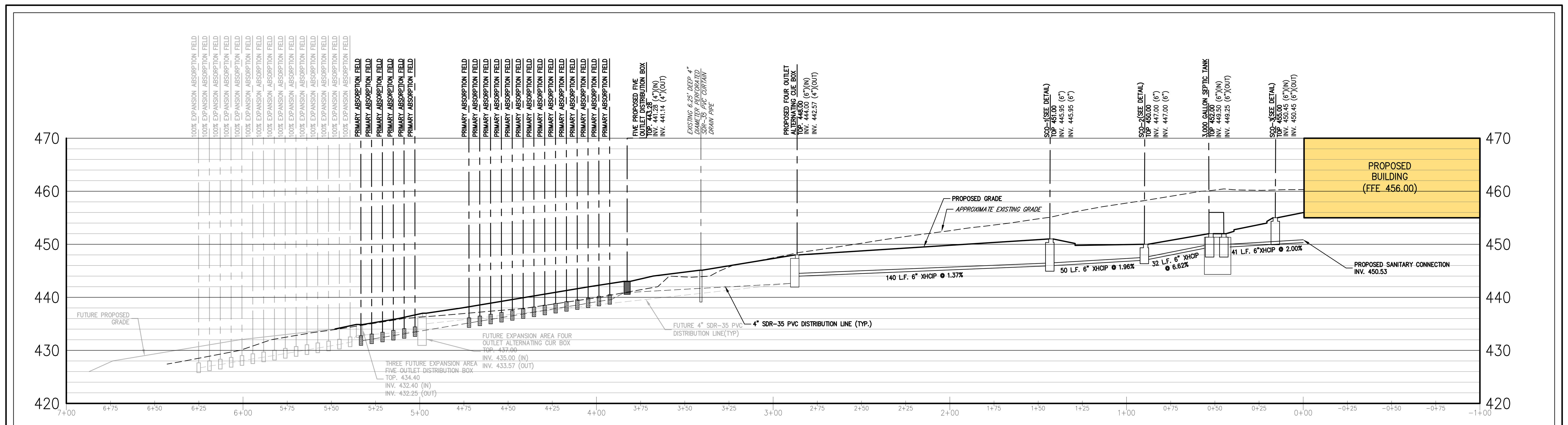

SANITARY PROFILE

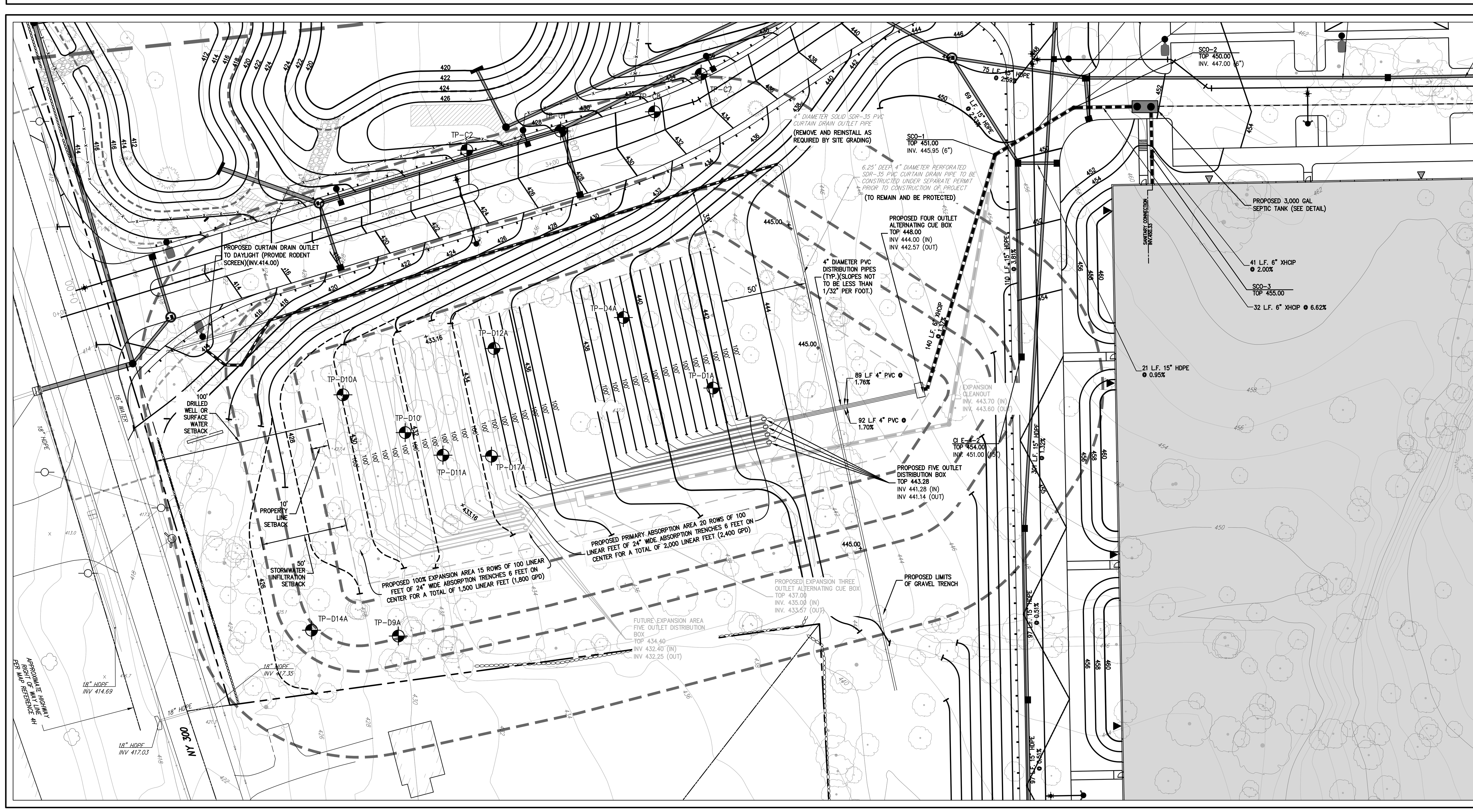

OWTS DETAIL PLAN

1" = 30'

ORANGE COUNTY DEPARTMENT OF HEALTH NOTES:

A. APPLICANT: YM & YH DEVELOPERS LLC

PROPERTY OWNER: YM & YH DEVELOPERS LLC

SITE LOCATION: ROUTE 300, TOWN OF NEWBURGH, NY 12550

TAX MAP NUMBER OF PARCELS: SECTION 34 BLOCK 02 LOT 45

B. ELEVATIONS OF THE ON-SITE WASTEWATER TREATMENT SYSTEM HAVE BEEN ESTABLISHED BASED ON THE SEWER INVERT AT THE BUILDING LINE AND GROUND ELEVATIONS WITHIN THE ABSORPTION AREA. SHOULD THE SEWER INVERT BE CHANGED, ADJUSTMENTS OF ELEVATIONS TO THE REMAINING PORTIONS OF THE SYSTEM MAY BE REQUIRED. ALL CHANGES SHALL BE ENDORSED BY THE ENGINEER PRIOR TO CONSTRUCTION.

C. THE DESIGN OF THE ON-SITE WASTEWATER TREATMENT AREAS ARE BASED ON A SOIL PERCOLATION RATE OF 21-30 MIN./INCH (0.60 GPD/S.F. APPLICATION RATE) AND THE CONSTRUCTION OF A 262,080 SQUARE FOOT WAREHOUSE, BASED UPON ONE EMPLOYEE PER 1,750 SQUARE FEET AND 12 GPD/EMPLOYEE (15 GPD - 20% FOR WATER SAVING FIXTURES) A MAXIMUM DESIGN FLOW OF 1,800 GPD IS ANTICIPATED.

D. THE ON-SITE WASTEWATER TREATMENT SYSTEM FOR THE BUILDING SHALL INCLUDE THE FOLLOWING IMPROVEMENTS:

2,000 LINEAR FEET, 24 INCH WIDE ABSORPTION TRENCH (PRIMARY)

1,500 LINEAR FEET, 24 INCH WIDE ABSORPTION TRENCH (EXPANSION)

1-3,000 GALLON PRECAST CONCRETE SEPTIC TANK

4 EACH PRECAST CONCRETE 5 OUTLET DISTRIBUTION BOX

ADDITIONAL IMPROVEMENTS: 4 OUTLET ALTERNATING CUE BOX DOSING CHAMBER

E. THE DESIGN SDS TREATMENT CAPACITY IS 1,800 GALLONS PER DAY HANDLED WITH 24" WIDE ABSORPTION TRENCHES. IT IS BASED UPON NEW YORK STATE DEPARTMENT OF ENVIRONMENTAL CONSERVATION "NEW YORK STATE DESIGN STANDARDS FOR INTERMEDIATE SIZED WASTEWATER TREATMENT SYSTEMS", TABLE B-3, EXPECTED LOADING RATES FOR A WAREHOUSE OF 15 GAL./DAY PER EMPLOYEE, AT 150 EMPLOYEES, LESS 20% FOR WATER SAVING FIXTURES. BASED UPON AN APPLICATION RATE OF 0.50 GAL/DAY/SF, 3,600 SQUARE FEET OF TREATMENT AREA IS REQUIRED/AND 4,000 SQUARE FEET OF TREATMENT AREA IS PROVIDED.

F. BASE INFORMATION WAS TAKEN FROM THE "TOPOGRAPHIC SURVEY OF PROPERTY," PREPARED BY JMC, LAST REVISED 10/29/2020.

G. THE BUILDING SEWER PIPE SHALL BE LAID ON A FIRM FOUNDATION AT A MINIMUM GRADE OF ONE-QUARTER INCH PER FOOT (2.00%). NINETY DEGREE ELBOWS ARE NOT PERMITTED AND ALL FORTY FIVE DEGREE BENDS SHALL HAVE ACCESSIBLE CLEANOUTS.

H. ALL PIPES CONNECTING TO TANK AND BOXES SHALL BE CUT FLUSH WITH THE INSIDE WALL OF THE BOX.

I. PRIOR TO ANY EXCAVATION ALL UNDERGROUND UTILITIES MUST BE LOCATED. CALL 1-800-962-7962.

J. THE DESIGN, CONSTRUCTION AND INSTALLATION SHALL BE IN ACCORDANCE WITH THIS PLAN AND GENERALLY ACCEPTED STANDARDS IN EFFECT AT THE TIME OF CONSTRUCTION WHICH INCLUDE:

"NEW YORK STATE DESIGN STANDARDS FOR INTERMEDIATE SIZED WASTEWATER TREATMENT SYSTEMS"
"RECOMMENDED STANDARDS FOR SEWAGE TREATMENT WORKS, (TEN STATES)."
"NEW YORK STATE DEPARTMENT OF HEALTH AND ORANGE COUNTY DEPARTMENT OF HEALTH POLICIES, PROCEDURES AND STANDARDS."

K. THIS PLAN IS APPROVED AS MEETING THE APPROPRIATE AND APPLIED TECHNICAL STANDARDS, GUIDELINES, POLICIES AND PROCEDURES FOR ARRANGEMENT OF SEWAGE DISPOSAL AND TREATMENT AND WATER SUPPLY FACILITIES.

L. THE DESIGN AND LOCATION OF SANITARY FACILITIES (WATER AND SEWER SYSTEMS) SHALL NOT BE CHANGED, WITHOUT REVIEW AND APPROVAL OF THE ORANGE COUNTY DEPARTMENT OF HEALTH.

M. NO WELLS EXIST WITHIN 300 FT OF THIS PROJECT UNLESS SHOWN ON THE PLANS.

N. TRENCHES SHALL NOT BE INSTALLED IN WET SOIL. THE SIDE AND BOTTOM OF TRENCHES MUST BE RAKES. THE ENDS OF LATERALS MUST BE CAPPED.

O. THERE IS NO REGRADING EXCEPT AS SHOWN ON THE APPROVED PLANS, IN THE AREA OF THE ABSORPTION FIELDS

P. HEAVY EQUIPMENT SHALL BE KEPT OFF THE AREA OF THE ABSORPTION FIELDS EXCEPT DURING THE ACTUAL CONSTRUCTION. THERE SHALL BE NO UNNECESSARY MOVEMENT OF CONSTRUCTION EQUIPMENT IN THE ACTUAL ABSORPTION FIELD AREA, BEFORE, DURING OR AFTER CONSTRUCTION. EXTREME CARE MUST BE TAKEN DURING THE ACTUAL CONSTRUCTION SO AS TO AVOID ANY UNDUE COMPACTION THAT COULD RESULT IN A CHANGE OF THE ABSORPTION CAPACITY OF THE SOIL ON WHICH THE DESIGN WAS BASED.

Q. NO SWIMMING POOLS, DRIVEWAYS OR STRUCTURES THAT MAY COMPACT THE SOIL SHALL BE LOCATED OVER ANY PORTION OF THE ABSORPTION FIELD.

R. THIS SYSTEM WAS NOT DESIGNED TO ACCOMMODATE GARBAGE GRINDER, JACUZZI TYPE SPA TUBS OVER 100 GALLONS, OR WATER CONDITIONERS. AS SUCH THESE ITEMS SHALL NOT BE INSTALLED UNLESS THE SYSTEM IS REDESIGNED TO ACCOUNT FOR THEM AND REAPPROVED BY THE ORANGE COUNTY HEALTH DEPARTMENT.

S. THERE MUST BE AN UNINTERRUPTED POSITIVE SLOPE FROM THE SEPTIC TANK (OR ANY PUMPING OR DOSING CHAMBERO TO THE BUILDING, ALLOWING SEPTIC GASES TO DISCHARGE THROUGH THE STACK VENT.

T. THE OWNER APPLICANT SHALL BE PROVIDED WITH A COPY OF THE APPROVED PLANS AND AN ACCURATE AS-BUILT DRAWING OF ANY EXISTING SANITARY FACILITIES.

U. THE SEPTIC TANKS SHOULD BE INSPECTED PERIODICALLY AND PUMPED EVERY 2-3 YEARS.

V. DISTRIBUTION BOX SHOULD BE INSPECTED PERIODICALLY TO ASSURE THAT THEY ARE LEVEL AND OPERATING PROPERLY.

W. A NEW YORK STATE LICENSED PROFESSIONAL ENGINEER SHALL INSPECT THE SANITARY FACILITIES AT THE TIME OF CONSTRUCTION. THE ENGINEER SHALL CERTIFY TO THE ORANGE COUNTY DEPARTMENT OF HEALTH AND THE LOCAL CODE ENFORCEMENT OFFICER THAT THE FACILITIES HAVE BEEN INSTALLED IN ACCORDANCE WITH THE APPROVED PLANS AND THAT ANY SEPTIC TANK JOINTS HAVE BEEN SEALED AND TESTED FOR WATER TIGHTNESS. THE ABOVE NOTED CERTIFICATION SHALL INCLUDE AS-BUILT PLANS THAT ARE SEALED BY THE PROFESSIONAL ENGINEER.

X. IN ACCORDANCE WITH ORANGE COUNTY DEPARTMENT OF HEALTH REQUIREMENTS, THE PIPE FROM INSIDE THE BUILDING TO THE SEPTIC TANK SHALL BE CAST IRON, DUCTILE IRON, OR SCH 80 PVC. PRIOR TO THE START OF CONSTRUCTION, THE SITE CONTRACTOR SHALL COORDINATE WITH THE BUILDING CONTRACTOR TO CONFIRM/ENSURE THAT THE SANITARY SERVICE FROM THE BUILDING TO THE POINT OF SITE CONNECTION(+/- 5' FROM THE BUILDING WALL) IS ONE OF THE THREE ABOVE NOTED PIPE MATERIALS. THE PIPE MATERIALS INSTALLED BY THE SITE CONTRACTOR SHALL MATCH THE MATERIAL INSTALLED TO THE SITE CONNECTION. JMC SHALL BE NOTIFIED IN WRITING IF THE PIPE MATERIAL DIFFERS FROM THE SPECIFIED CIP.

MININAL HORIZONTAL SEPARATION DISTANCES (IN FEET)

EXISTING FEATURE	WATERTIGHT SEPTIC TANK	SEWER LINE	ABSORPTION FIELD
DRILLED WELL-PUBLIC WATER SYSTEM	100	50	200
WATER LINE (PRESSURE)	10	10	10
STORMWATER INFILTRATION MANAGEMENT PRACTICE	25	25	50
CATCH BASIN	25	N/A	50
FOUNDATION	10	N/A	20
PROPERTY LINE	10	10	10
SWALE	N/A	N/A	25

TEST LOCATION LABELS LEGEND

B-X	BORING LOCATION/DESIGNATION
TP-X	TEST PIT LOCATION/DESIGNATION
SW-X	STORMWATER TEST LOCATION/DESIGNATION
TP-CX	CIVIL ENGINEER TEST PIT/PERCOLATION TEST LOCATION/DESIGNATION
TP-DX	SEPTIC SYSTEM PERCOLATION TEST LOCATION/DESIGNATION

TEST LOCATION LEGEND NOTES:

A. BORINGS, TEST PITS AND STORMWATER TESTS WERE PERFORMED BY CARLIN-SIMPSON AND ASSOCIATES. THE CIVIL ENGINEER TEST PITS/INFILTRATION TESTS WERE PERFORMED BY JMC, PLLC TO ACQUIRE INFORMATION FOR THE DESIGN OF THE PROPOSED ON SITE WASTEWATER TREATMENT SYSTEM.

LEGEND

- EXISTING PROPERTY LINE
- ADJACENT PROPERTY LINE
- EXISTING EASEMENT LINE
- EXISTING WETLAND LINE AND DELINEATION (WLF-63, WLF-64, WLF-65)
- EXISTING BUILDING LINE
- EXISTING PAVEMENT EDGE
- EXISTING CURB LINE
- EXISTING CONTOUR (172)
- EXISTING INDEX CONTOUR (170)
- EXISTING STONE WALL
- EXISTING RETAINING WALL
- EXISTING GUIDE RAIL
- EXISTING FENCE
- EXISTING STORM DRAIN LINE AND SIZE (36" RCP)
- EXISTING SANITARY LINE AND SIZE (8" SAN)
- EXISTING DRAIN INLET
- EXISTING MANHOLE
- EXISTING FIRE HYDRANT
- EXISTING GAS VALVE (GV)
- EXISTING WATER VALVE (WV)
- EXISTING UTILITY POLE
- EXISTING LIGHT POLE
- EXISTING SIGN
- PROPOSED BUILDING LINE
- PROPOSED CONCRETE CURB
- PROPOSED CONCRETE SIDEWALK
- SMH — PROPOSED SANITARY SEWER MANHOLE
- MH — PROPOSED STORM DRAIN MANHOLE
- CI — PROPOSED TYPE CI DRAIN INLET
- DI — PROPOSED TYPE DI DRAIN INLET
- PROPOSED HEADWALL
- WQS — PROPOSED WATER QUALITY STRUCTURE
- OCS — PROPOSED SUBSURFACE DRAINAGE OUTLET CONTROL STRUCTURE
- OCS — PROPOSED OUTLET CONTROL STRUCTURE
- CO — PROPOSED CLEANOUT
- PROPOSED HYDRANT
- 15" HDPE — PROPOSED STORM DRAIN LINE & SIZE
- 8" PVC — PROPOSED SANITARY SEWER LINE & SIZE
- 6" WATER — PROPOSED WATER LINE & SIZE
- PROPOSED WATER VALVE
- PROPOSED RETAINING WALL (DESIGN BY OTHERS)
- PROPOSED PIPE CROSSING LABEL

NOTES:

1. EXISTING CONDITIONS DEPICTED HEREON HAVE BEEN TAKEN FROM SURVEY TITLED, "TOPOGRAPHIC SURVEY OF PROPERTY," PREPARED BY JMC ENGINEERING, LANDSCAPE ARCHITECTURE & LAND SURVEYING, PLLC., LAST REVISED 08/09/2021. CONTRACTOR SHALL SATISFY HIM/HERSELF AS TO THE ACCURACY OF THE EXISTING INFORMATION SHOWN HEREON AND IDENTIFY ANY DISCREPANCIES PRIOR TO THE ISSUANCE OF A BID.
2. UNLESS OTHERWISE SPECIFIED, PIPE FOR SANITARY SEWER GRAVITY LINES SHALL BE POLYVINYL CHLORIDE PIPE (PVCP), SDR-35, WITH PUSH-ON JOINTS IN ACCORDANCE WITH ASTM D-3034 AND D-3212.
3. THE TREES WITHIN THE OWTS EXPANSION AREA SHALL REMAIN AND BE PROTECTED UNTIL SUCH TIME THAT THE OWTS EXPANSION MUST BE CONSTRUCTED.
4. THE CONTRACTOR SHALL PROVIDE AN AS-BUILT SURVEY OF THE ON-SITE WASTE WATER TREATMENT SYSTEM (OWTS) AS SHOWN HERE ON AND FURTHER DETAILED ON DRAWING C-310 THAT SHALL BE SIGNED AND SEALED BY A NEW YORK STATE LICENSED SURVEYOR. THE SURVEY SHALL PROVIDE THE LOCATION AND INVERTS FOR ALL PIPES AND STRUCTURES ASSOCIATED WITH THE OWTS.
5. THE FINAL LAYOUT OF THE PROPOSED SEWER CONNECTION, INCLUDING ALL MATERIALS, SIZE AND LOCATION OF SERVICE AND ALL APPURTENANCES, IS SUBJECT TO THE REVIEW AND APPROVAL OF THE TOWN OF NEWBURGH SEWER DEPARTMENT. NO PERMITS SHALL BE ISSUED FOR A SEWER CONNECTION UNTIL A FINAL LAYOUT IS APPROVED BY THE RESPECTIVE DEPARTMENT.
6. ALL GRAVITY SANITARY SEWER SERVICE LINES SHALL BE 4 INCHES IN DIAMETER OR LARGER AND SHALL BE SDR-35 PVC PIPE CONFORMING TO ASTM D-3034-89. JOINTS SHALL BE PUSH-ON WITH ELASTOMERIC RING GASKET CONFORMING ASTM D-3212. FITTINGS SHALL BE AS MANUFACTURED BY THE PIPE SUPPLIER OR EQUAL AND SHALL HAVE A BELL AND SPIGOT CONFIGURATION COMPATIBLE WITH THE PIPE.
7. UNDER INDUSTRIAL CODE 753, THE CONTRACTOR SHALL BE REQUIRED TO NOTIFY ALL OPERATORS OF UTILITIES LISTED ON THE CURRENT "MASTER LIST OF OPERATORS" ON FILE WITH THE CENTRAL REGISTRY AS WELL AS THE TOWN OF NEWBURGH AND NYSDOT PRIOR TO THE START OF THIS WORK SO THAT ALL THE VARIOUS UNDERGROUND UTILITY OPERATORS WILL BE ABLE TO LOCATE AND MARK THE LOCATIONS OF THEIR OWN UTILITIES. NO WORK SHALL COMMENCE UNTIL ALL THE OPERATORS HAVE NOTIFIED THE CONTRACTOR THAT THEIR UTILITIES HAVE BEEN LOCATED
8. THE CONTRACTOR SHALL BE RESPONSIBLE FOR THE PRESERVATION OF ALL PUBLIC AND PRIVATE UNDERGROUND AND SURFACE UTILITIES AND STRUCTURES AT OR ADJACENT TO THE SITE OF CONSTRUCTION, INSOFAR AS THEY MAY BE ENDANGERED BY HIS OPERATIONS. THIS SHALL HOLD TRUE WHETHER OR NOT THEY ARE SHOWN ON THE CONTRACT DRAWINGS. IF THEY ARE SHOWN ON THE DRAWINGS, THEIR LOCATIONS ARE NOT GUARANTEED EVEN THOUGH THE INFORMATION WAS OBTAINED FROM THE BEST AVAILABLE SOURCES. THE CONTRACTOR SHALL, AT HIS OR HER OWN EXPENSE, REPAIR OR REPLACE ANY STRUCTURES OR UTILITIES THAT HE OR SHE DAMAGES, AND SHALL CONSTANTLY PROCEED WITH CAUTION TO PREVENT UNDUE INTERRUPTION TO UTILITY SERVICE.
9. THIS PLAN IS PROVIDED FOR THE APPROVAL, PERMITTING, AND CONSTRUCTION OF THE SEWAGE DISPOSAL SYSTEM. THEREFORE,ALL NOTES, DETAILS, AND SPECIFICATIONS PERTAINING TO PROPOSED DOMESTIC WATER SERVICES, STORM DRAINAGE SYSTEMS, AND OTHER UTILITIES ARE SHOWN HEREON FOR INFORMATION ONLY AND ARE NOT FOR ORANGE COUNTY DEPARTMENT OF HEALTH, OR NYSDEC, REVIEW OR APPROVAL.
10. REFER TO DRAWING C-300 FOR VERTICAL SEPARATION BETWEEN SANITARY SEWER MAINS AND DOMESTIC WATER AND/OR STORM DRAINAGE PIPING.
11. THE SEWAGE DISPOSAL SYSTEM TO BE CONSTRUCTED AT THIS SITE INTENDED TO TREAT STANDARD RESTROOM FACILITIES WITHIN THE WAREHOUSE BUILDING. THERE ARE NO SHOWER FACILITIES PROPOSED TO BE CONSTRUCTED.

PERCOLATION TESTING DATA TABLE

TEST PIT NO.	DATE TESTED	TEST PIT DESCRIPTION	PERCOLATION RATE (MIN/IN)	GROUNDWATER PRESENT (Y/N)	DEPTH FROM GRADE	PRESOAKED? (Y/N)	DIAMETER OF HOLE
TP-D1A	05/16/2022	LIGHT BROWN SANDY SILT WITH COBBLES	11.00	NO	24"	YES	6"
TP-D4A	05/16/2022	LIGHT BROWN SANDY SILT WITH COBBLES	18.00	NO	25"	YES	6"
TP-D9A	05/16/2022	LIGHT BROWN SANDY SILT WITH COBBLES	9.00	NO	26"	YES	6"
TP-D10	10/21/2021	LIGHT BROWN SANDY SILT WITH COBBLES	19.67	NO	24"	YES	6"
TP-D10A	05/16/2022	LIGHT BROWN SANDY SILT WITH COBBLES	10.33	NO	24"	YES	6"
TP-D11A	05/16/2022	LIGHT BROWN SANDY SILT WITH COBBLES	5.00	NO	24"	YES	6"
TP-D12A	05/16/2022	LIGHT BROWN SANDY SILT WITH COBBLES	27.33	NO	24"	YES	6"
TP-D14A	05/24/2022	LIGHT BROWN SANDY SILT WITH COBBLES	5.00	NO	24"	YES	6"
TP-D17A	05/24/2022	LIGHT BROWN SANDY SILT WITH COBBLES	11.67	NO	24"	YES	6"

DEEP HOLE TESTING DATA TABLE

TEST PIT NO.	DATE TESTED	TEST PIT DESCRIPTION	DEPTH ACHEIVED	GROUNDWATER PRESENT (Y/N)	DEPTH TO ROCK	MOTTLING (Y/N)
TP-C1	10/20/2020	0"-8" TOPSOIL 8"-96" LIGHT BROWN SANDY SILT	96"	NO	N/A	N
TP-C2	10/20/2020	0"-8" TOPSOIL 8"-96" LIGHT BROWN SANDY SILT	96"	NO	N/A	N
TP-C3	10/20/2020	0"-8" TOPSOIL 8"-96" LIGHT BROWN SANDY SILT	96"	NO	N/A	N
TP-C4	10/20/2020	0"-8" TOPSOIL 8"-96" LIGHT BROWN SANDY SILT	96"	NO	N/A	N
TP-C5	10/20/2020	0"-8" TOPSOIL 8"-96" LIGHT BROWN SANDY SILT	96"	NO	N/A	N
TP-C6	10/20/2020	0"-8" TOPSOIL 8"-96" LIGHT BROWN SANDY SILT	96"	NO	N/A	N
TP-C7	10/20/2020	0"-8" TOPSOIL 8"-96" LIGHT BROWN SANDY SILT	96"	NO	N/A	N
TP-C8	10/20/2020	0"-8" TOPSOIL 8"-96" LIGHT BROWN SANDY SILT	96"	NO	N/A	N

No.	Revision	Date	By
1.	REVISED PER PLANNING BOARD COMMENTS	06/19/2023	RFA

Previous Editions Obsolete

APPLICANT:
YM & YH DEVELOPERS LLC
1156 59TH STREET
BROOKLYN, NY 11219

JMC Planning, Engineering, Landscape Architecture & Land Surveying, PLLC
JMC Site Development Consultants, LLC
John Meyer Consulting, Inc.
120 BEDFORD ROAD • ARMONK, NY 10504
voice 914.273.5225 • fax 914.273.2102
www.jmcpllc.com

JMC

ON SITE WASTEWATER TREATMENT SYSTEM PLAN

FARRELL INDUSTRIAL PARK
ROUTE 300
TOWN OF NEWBURGH, NY

STATE OF NEW YORK — DIEGO A. VILLAREALE — LICENSED PROFESSIONAL ENGINEER

ANY ALTERATION OF PLANS, SPECIFICATIONS, PLATS AND REPORTS BEARING THE SEAL OF A LICENSED PROFESSIONAL ENGINEER OR LICENSED LAND SURVEYOR IS A VIOLATION OF ARTICLE 145 OF THE NEW YORK STATE EDUCATION LAW, EXCEPT AS PROVIDED FOR BY SECTION 7209, SUBSECTION 2.

Drawn: TC	Approved: DL/JS
Scale: SEE PLAN	
Date: 04/19/2023	
Project No: 22127	
22127-SEPTIC-ALT	OWTS / GRADUTIL.scr
Drawing No: C-310	

(OCDOH SEWAGE DISPOSAL SHEET 4 OF 5)

COPYRIGHT © 2019 by JMC All Rights Reserved. No part of this document may be reproduced, stored in a retrieval system, or transmitted in any form or by means, electronic, mechanical, photocopying, recording or otherwise, without the prior written permission of JMC PLANNING, ENGINEERING, LANDSCAPE ARCHITECTURE & LAND SURVEYING, PLLC | JMC SITE DEVELOPMENT CONSULTANTS, LLC | JOHN MEYER CONSULTING, INC. (JMC). Any modifications or alterations to this document without the written permission of JMC shall render them invalid and unusable.

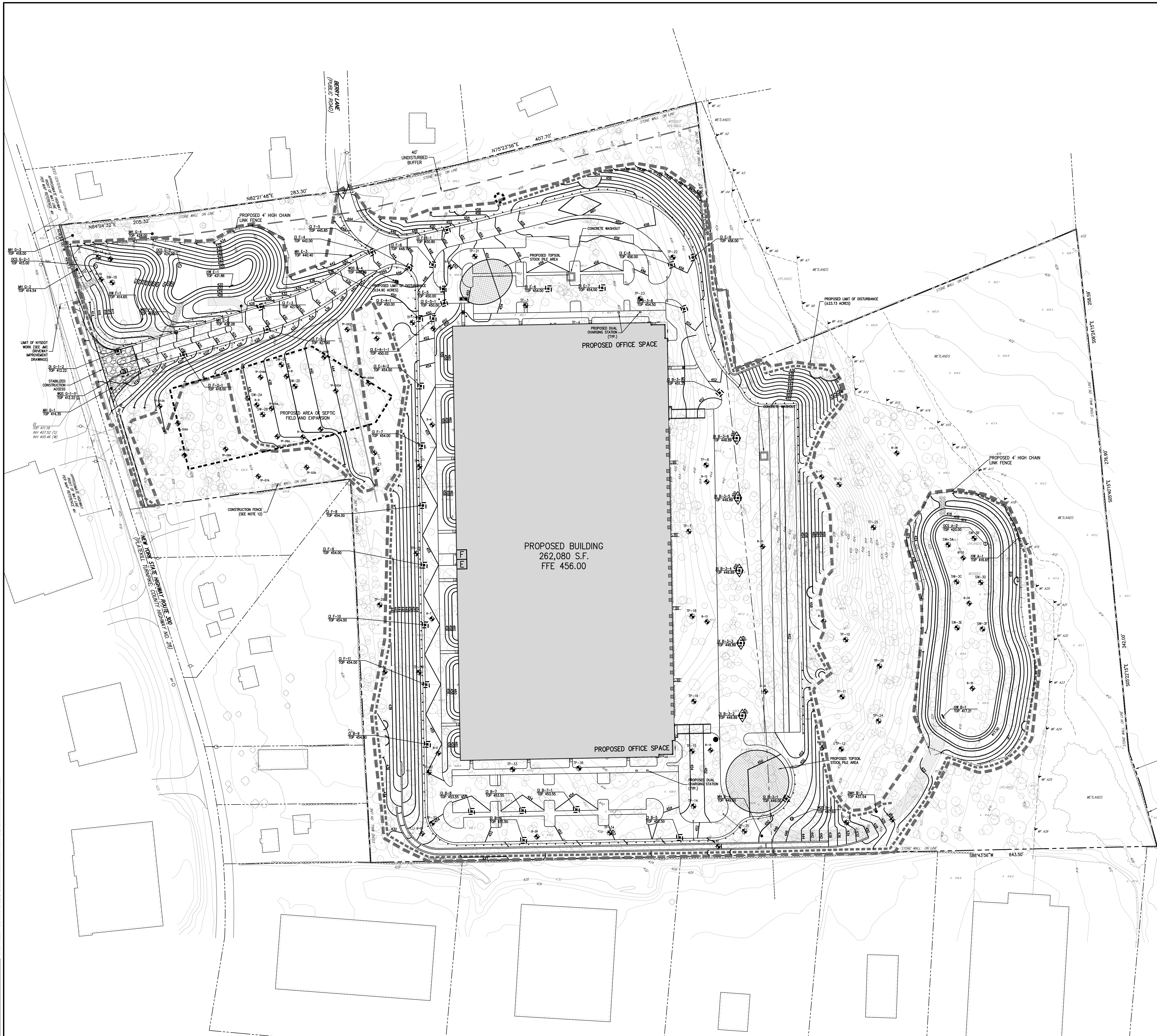

NOT FOR CONSTRUCTION

COPYRIGHT © 2021 by JMC. All Rights Reserved. No part of this document may be reproduced, stored in a retrieval system, or transmitted in any form or by means, electronic, mechanical, photocopying, recording or otherwise, without the prior written permission of JMC PLANNING, ENGINEERING, LANDSCAPE ARCHITECTURE & LAND SURVEYING, PLLC | JMC SITE DEVELOPMENT CONSULTANTS, LLC | JOHN MEYER CONSULTING, INC. (JMC). Any modifications or alterations to this document without the written permission of JMC shall render them invalid and unusable.

LEGEND

- PROPOSED INLET PROTECTION
- PROPOSED CONSTRUCTION FENCE
- PROPOSED SILT FENCE
- PROPOSED LIMIT OF DISTURBANCE
- PROPOSED STABILIZED CONSTRUCTION ENTRANCE
- PROPOSED STOCKPILE AREA
- PROPOSED TEMPORARY SWALE
- PROPOSED TEMPORARY SEDIMENT BASIN
- PROPOSED TREE PROTECTION
- TEMPORARY RISER & ANTI-VORTEX DEVICE

NOTES:

1. EXISTING CONDITIONS DEPICTED HEREON HAVE BEEN TAKEN FROM SURVEY TITLED, "TOPOGRAPHIC SURVEY OF PROPERTY," PREPARED BY JMC ENGINEERING, LANDSCAPE ARCHITECTURE & LAND SURVEYING, PLLC., LAST REVISED 08/09/2021. CONTRACTOR SHALL SATISFY HIM/HERSELF AS TO THE ACCURACY OF THE EXISTING INFORMATION SHOWN HEREON AND IDENTIFY ANY DISCREPANCIES PRIOR TO THE ISSUANCE OF A BID.
2. THIS PLAN IS FOR TEMPORARY EROSION AND SEDIMENT CONTROL INFORMATION ONLY.
3. PRIOR TO BEGINNING ANY CLEARING, GRUBBING OR EXCAVATION, ALL EROSION AND SEDIMENT CONTROL MEASURES SHALL BE INSTALLED IN ACCORDANCE WITH ALL THE PLANS AND SPECIFICATIONS. EROSION AND SEDIMENT CONTROL MEASURES SHALL BE MAINTAINED UNTIL THE SITE IS STABILIZED. FINAL STABILIZATION OF LANDSCAPED AREAS SHALL BE IN ACCORDANCE WITH THE LANDSCAPE PLAN.
4. THE CONTRACTOR SHALL INSPECT AND MAINTAIN ON-SITE EROSION AND SEDIMENT CONTROL MEASURES ON A DAILY BASIS. ALL COLLECTED SEDIMENT WITHIN SEDIMENT BARRIERS SHALL BE REMOVED PERIODICALLY AS REQUIRED TO MAINTAIN THE FUNCTION OF THE SEDIMENT BARRIERS. ALL SEDIMENT COLLECTED SHALL BE RESPREAD ON-SITE WITHIN STABILIZED AREAS AS DIRECTED BY THE OWNERS REPRESENTATIVE.
5. THE CONTRACTOR SHALL INSPECT DOWNSTREAM CONDITIONS FOR EVIDENCE OF SEDIMENTATION ON A WEEKLY BASIS, AFTER EACH RAINSTORM, AND AS MAY BE REQUIRED OR DIRECTED BY ALL APPLICABLE APPROVALS AND PERMITS. THE CONTRACTOR SHALL IMMEDIATELY PROVIDE A WRITTEN REPORT ON FINDINGS OF SEDIMENT IN DOWNSTREAM AREAS TO ALL AUTHORITIES HAVING JURISDICTION AND MAKE REPAIRS AS REQUIRED OR DIRECTED.
6. ADDITIONAL EROSION AND SEDIMENT CONTROL MEASURES SHALL BE INSTALLED BY THE CONTRACTOR AS REQUIRED/WARRANTED BY FIELD CONDITIONS AND AS DIRECTED BY THE OWNERS REPRESENTATIVE, JMC, AND/OR ANY AUTHORITY HAVING JURISDICTION.
7. STOCKPILING OF CONSTRUCTION MATERIAL SHALL BE PLACED ON-SITE IN THE AREA DESIGNATED ON THIS PLAN OR AS APPROVED BY THE OWNERS REPRESENTATIVE. STOCKPILED EXCAVATED MATERIAL SHALL HAVE TWO ROWS OF SILT FENCE LOCATED AROUND ITS PERIMETER. ALL STOCKPILED MATERIAL SHALL BE MAINTAINED IN AN ORDERLY MANNER SO AS NOT TO IMPEDE ON PEDESTRIAN AND/OR VEHICULAR TRAFFIC CIRCULATION ROUTES.
7. DUST SHALL BE CONTROLLED BY SPRINKLING OR OTHER APPROVED METHODS AS NECESSARY, OR AS DIRECTED BY THE OWNERS REPRESENTATIVE.
8. ALL STORMWATER MANAGEMENT PRACTICES SHALL REMAIN UNDISTURBED AND BE PROTECTED FROM HEAVY MACHINERY TRAFFIC DURING CONSTRUCTION. HOWEVER DURING CONSTRUCTION OF THE PRACTICE THE CONTRACTOR SHALL MINIMIZE AND AVOID HEAVY MACHINERY TRAFFIC TO THE MAXIMUM EXTENT PRACTICABLE. THERE SHALL BE NO STORAGE OF MATERIALS WITHIN AREAS TO BE USED FOR STORMWATER MANAGEMENT PRACTICES. THE CONTRACTOR SHALL INSTALL CONSTRUCTION FENCE AROUND THE PRACTICE TO DISCOURAGE VEHICLE TRAFFIC.
9. THIS PROJECT WILL BE REQUESTING THE 5-ACRE WAIVER FROM THE NYSDEC, AS THE AREA OF PROPOSED GROUND DISTURBANCE FOR CONSTRUCITON OF THE SITE WILL, AT TIMES, EXCEED FIVE ACRES. AT SUCH TIMES, IN AREAS WHERE SOIL DISTURBANCE ACTIVITY HAS TEMPORARILY OR PERMANENTLY CEASED, THE APPLCATION OF SOIL STABILIZATION MEASURES MUST BE INITIATED BY THE END OF THE NEXT BUSINESS DAY AND COMPLETED WITH SEVEN DAYS FROM THE DATE THE CURRENT SOIL DISTURBANCE ACTIVITY CEASED. THE SOIL STABILIZATION MEASURES SELECTED SHALL BE IN CONFORMANCE WITH THE TECHNICAL STANDARD, NEW YORK STATE STANDARDS AND SPECIFICATIONS FOR EROSION AND SEDIMENT CONTROL, DATED NOVEMBER 2016. AT TIMES WHEN GROUND DISTURBANCE IS LESS THAN 5 ACRES,
10. ALL EXPOSED SLOPES AND GRADED/DISTURBED AREAS, THAT WILL NOT BE FURTHER DISTURBED WITHIN 14 CALENDAR DAYS (7 DAYS FOR CONSTRUCTION SITES THAT EITHER DIRECTLY DISCHARGE TO ONE OF THE 303(d) SEGMENTS LISTED IN APPENDIX E OF THE GENERAL PERMIT OR ARE LOCATED WITHIN ONE OF THE WATERSHEDS LISTED IN APPENDIX C OF THE GENERAL PERMIT), SHALL BE TEMPORARILY SEEDED WITHIN 24 HOURS OF DISTURBANCE, IN ACCORDANCE WITH THE NEW YORK STATE DEPARTMENT OF ENVIRONMENTAL CONSERVATION (NYSDEC) "EROSION AND SEDIMENT CONTROL GUIDELINES" AND THE ANSI A300 "BEST MANAGEMENT PRACTICES FOR TREE AND SHRUB PLANTING, TRANSPLANTING, MAINTENANCE AND CARE," PREPARED BY THE INTERNATIONAL SOCIETY OF ARBORICULTURE (ISA), LATEST EDITIONS, AS FOLLOWS:
   A. SEED MIXTURE AND RATE OF APPLICATION:
      A.1. IN SPRING, SUMMER OR EARLY FALL, SEED THE AREA WITH RYEGRASS (ANNUAL OR PERENNIAL) AT 30 POUNDS PER ACRES (APPROXIMATELY 0.7 POUNDS/1000 SQUARE FEET OR USE 1 POUND/1000 SQUARE FEET).
      A.2. IN LATE FALL OR EARLY WINTER, SEED THE AREA WITH CERTIFIED 'AROOSTOOK' WINTER RYE (CEREAL RYE) AT 100 POUNDS PER ACRE (2.5 POUNDS/1000 SQUARE FEET).
   B. APPLICATION SHALL BE UNIFORM BY MECHANICAL OR HYDROSEED METHODS.
   C. MULCH ALL SEEDED AREAS WITH STRAW AT A RATE OF 2 TONS PER ACRE (90 POUNDS PER 1,000 SQUARE FEET) SUCH THAT THE MULCH FORMS A CONTINUOUS BLANKET.
10. ALL SEEDED AREAS SHALL BE FERTILIZED, RESEEDED, AND MULCHED AS NECESSARY TO MAINTAIN VIGOROUS, DENSE VEGETATIVE COVER.
11. TEMPORARY SEED MIXTURES SHALL NOT BE PLACED ON AREAS WHERE FINAL GRADE HAS BEEN ESTABLISHED AND TOPSOIL HAS BEEN PLACED UNLESS OTHERWISE DIRECTED BY THE PROJECT LANDSCAPE ARCHITECT.
12. CONSTRUCTION FENCE SHALL BE INSTALLED AROUND THE ENTIRE PERIMETER OF THE PROPOSED SEPTIC FIELD AND EXPANSION AREA PRIOR TO THE START OF ANY SITEWORK, INCLUDING TREE REMOVAL. THE FENCE SHALL BE MAINTAINED AT ALL TIMES DURING CONSTRUCTION. CONSTRUCTION ACTIVITY WITHIN THIS AREA SHALL BE LIMITED TO THE WORK REQUIRED FOR THE INSTALLATION OF THE SEPTIC SYSTEM AND ALL WORK SHALL BE DONE WITHOUT THE USE OF HEAVY EQUIPMENT.
13. PRIOR TO THE START OF CONSTRUCTION, THE OWNER/APPLICANT SHALL ENSURE THAT THE WETLAND FLAGS SHOWN HEREON ARE RESET IN THE FIELD. THE CONTRACTOR SHALL MAINTAIN THE FLAGS THROUGHOUT THE COURSE OF CONSTRUCTION

No.	Revision	Date	By
1.	REVISED PER PLANNING BOARD COMMENTS	06/19/2023	RFA

Previous Editions Obsolete

APPLICANT:
YM & YH DEVELOPERS LLC
1156 59TH STREET
BROOKLYN, NY 11219

JMC Planning, Engineering, Landscape Architecture & Land Surveying, PLLC
JMC Site Development Consultants, LLC
John Meyer Consulting, Inc.
120 BEDFORD ROAD • ARMONK, NY 10504
voice 914.273.5225 • fax 914.273.2102
www.jmcpllc.com

JMC

EROSION AND SEDIMENT CONTROL PLAN

FARRELL INDUSTRIAL PARK
ROUTE 300
TOWN OF NEWBURGH, NY

ANY ALTERATION OF PLANS, SPECIFICATIONS, PLATS AND REPORTS BEARING THE SEAL OF A LICENSED PROFESSIONAL ENGINEER OR LICENSED LAND SURVEYOR IS A VIOLATION OF SECTION 7209 OF THE NEW YORK STATE EDUCATION LAW, EXCEPT AS PROVIDED FOR BY SECTION 7209, SUBSECTION 2.

STATE OF NEW YORK · DIEGO A. VILLAREALE · LICENSED PROFESSIONAL ENGINEER · 088456

Drawn: TC		Approved: DL/JS	
Scale: 1" = 50'			
Date: 04/19/2023			
Project No: 22127			
22127-S&E	SE	SE.scr	
Drawing No: C-400			

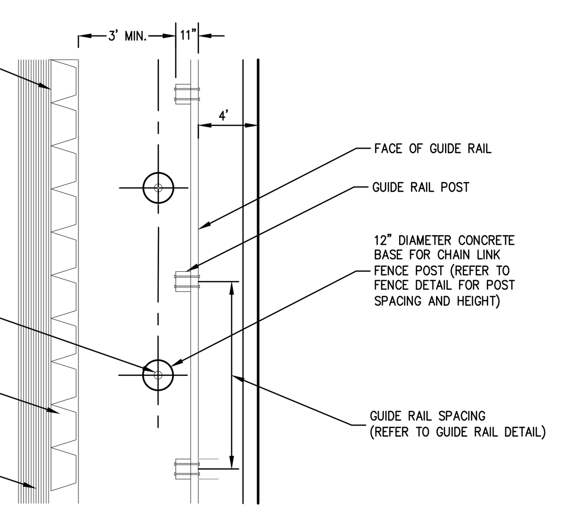

TOP VIEW

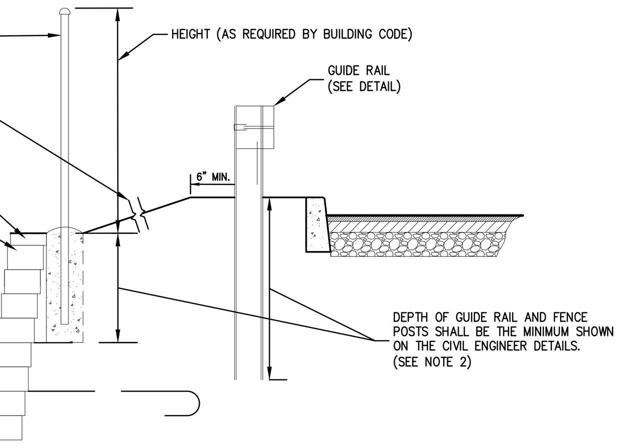

SIDE VIEW

NOTES:

1. THIS DETAIL IS PROVIDED FOR GENERAL REFERENCE AND COORDINATION ONLY. THE CONTRACTOR SHALL REFER TO THE WALL DESIGN PLANS, PREPARED BY A NYS LICENSED PROFESSIONAL ENGINEER, FOR FURTHER INFORMATION REGARDING CONSTRUCTION DETAILING.

2. PRIOR TO THE START OF WALL CONSTRUCTION, CONTRACTOR SHALL CONFIRM THAT THE WALL DESIGN CONSIDERS THE INSTALLATION OF PROPOSED GUIDE RAIL AND FENCE SHOWN HEREON. ANY DISCREPANCIES OR QUESTIONS SHALL BE BROUGHT TO THE ATTENTION OF JMC AND THE WALL DESIGN ENGINEER IN WRITING.

SEGMENTAL RETAINING WALL, GUIDE RAIL, & FENCE DETAIL
(TO BE DESIGNED BY OTHERS)

55

"H" (FT)	LINE POST	TERMINAL POST
5' OR LESS	2" O.D./2.72 #/FT	2.5" O.D./3.65 #/FT
> 5'-0"	2.5" O.D./3.65 #/FT	3" O.D./5.79 #/FT

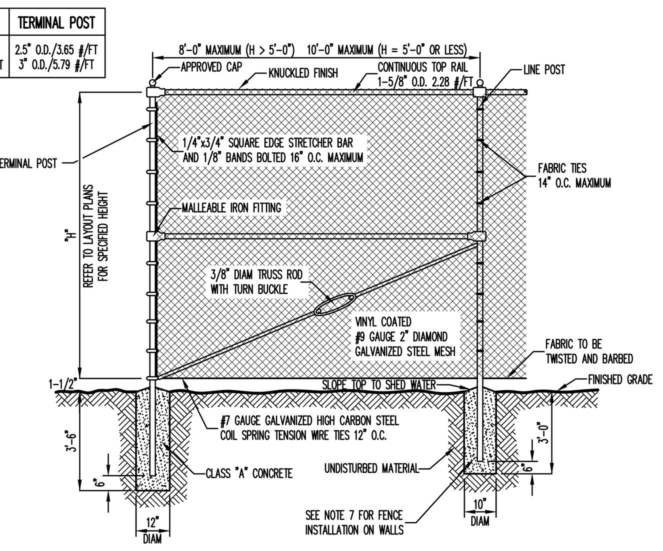

NOTES:

1. ALL POSTS, RAILS, FABRIC AND ACCESSORIES SHALL BE VINYL COATED. COLOR OF VINYL COATING SHALL BE BLACK.
2. POST AND RAILS SHALL BE STANDARD FULL WEIGHT VINYL COATED GALVANIZED SCHEDULE 40 PIPE MANUFACTURED AND GALVANIZED IN ACCORDANCE WITH ASTM A-120. ALL MATERIALS SHALL BE NEW AND FIRST CLASS AND SHALL NOT INCLUDE RECONDITIONED OR REROLLED PIPE.
3. FITTINGS SHALL BE VINYL COATED MALLEABLE IRON FITTINGS CONFORMING TO THE REQUIREMENTS OF ASTM A-47 GALVANIZED IN ACCORDANCE WITH ASTM A-153.
4. FABRIC SHALL BE 9 GAUGE GALVANIZED 2" MESH, WHICH SHALL BE VINYL CLAD IN CONFORMANCE WITH THE REQUIREMENTS OF AASHTO M-181, TYPE III. VINYL COATING SHALL BE FIRMLY AND CONTINUOUSLY EXTRUSION BONDED TO THE GALVANIZED STEEL WIRE. TOP SELVAGE SHALL HAVE KNUCKLED FINISH.
5. TENSION WIRE SHALL BE VINYL COATED 7 GAUGE MEETING THE REQUIREMENTS OF ASTM A-641 AS MODIFIED HEREIN. THE TENSILE STRENGTH SHALL BE AT LEAST 80,000 PSI WITH A GALVANIZED COATING OF NOT LESS THAN 0.7 OZ. PER SQUARE FOOT.
6. FABRIC TIES SHALL BE MINIMUM 9 GAUGE VINYL COATED GALVANIZED STEEL OR ALUMINUM. MINIMUM SPACING SHALL BE AS FOLLOWS:
   A. 14" O.C. AT LINE POSTS
   B. 24" O.C. AT TOP RAIL
   C. 12" O.C. AT TENSION WIRE
7. WHERE CHAIN LINK FENCE IS TO BE INSTALLED ON WALLS, THE FENCE POSTS SHALL BE IMBEDDED A MINIMUM OF TWELVE (12) INCHES IN THE WALL. NEWLY CONSTRUCTED WALLS SHALL BE PROVIDED WITH PROPER SIZE SLEEVES TO ACCOMMODATE FENCE POSTS. FENCE POSTS SHALL BE SECURELY GROUTED IN PLACE USING AN APPROVED HIGH STRENGTH, NON-SHRINKING, NON-STAINING GROUT.
8. THE CONTRACTOR WILL BE REQUIRED TO SUBMIT SHOP AND ERECTION DRAWINGS INDICATING MATERIALS, SIZES AND DIMENSIONS OF FENCING TO THE OWNER'S FIELD REPRESENTATIVE PRIOR TO ORDERING MATERIALS FOR HIS REVIEW AND APPROVAL.
9. PRIOR TO INSTALLATION OF THE FENCE, THE CONTRACTOR SHALL CHECK THE FENCE LAYOUT WITH THE OWNER'S FIELD REPRESENTATIVE WHO MUST APPROVE THE LAYOUT BEFORE ANY OF THE WORK IS TO BE DONE.

CHAIN LINK FENCE
(VINYL COATED)

56

enel X way

JuicePedestal Specifications

Robust, Convenient Mounting Solution	> Ships with two JuiceBox Pro chargers assembled to unit to reduce installation costs > Easy, quick installation: ground-mounted with 4 bolts, concrete pad recommended > Cable management: retractable weight pulley cables system > Powder coated stainless steel construction
Weight & Dimensions	> Height: 74 in/188 cm > Width: 19.88 in/50.50 cm by 8.00 in /20.32 cm deep > Weight: 175 lbs/79.38 kg (without charging units-add 15-17 lbs/6.80-7.71 kg per JuiceBox)
Safety and certifications	> UL, cUL and ENERGY STAR® compliant
Warranty	> 3-year limited warranty, optional 2 additional years
Made in North America	> From domestic & imported parts
JuiceBox Pro Charging Stations	
Electrical Characteristics	> Choose between four power configurations: 32A, 7.7 kW; 40A, 9.6 kW; 48A, 11.2kW; and 80A, 19.2 kW > Single phase input: nominal voltage 208-240 VAC ~60 Hz
Input Cables	> Internal junction box for two circuits to power chargers
Output Cable & Connector	> 20 ft/6.1m cables, each rated 240VAC with a J1772 Plug
JuiceNet® Smart Charging Platform	> Precision measurement of power, energy, voltage & current > Web-based portal: set payment rates and charging hours; monitor charging status and consumption data for individual or groups of devices; control station access; manage EV load > Driver app to monitor and pay for charging (iOS & Android) > Refer to the JuiceNet Business and JuiceNet Enterprise datasheets for more on the capabilities of each dashboard
Connectivity & Authentication	> WiFi: 802.11 b/g/n 2.4 GHz > JuiceRouter: Connect up to 16 chargers with WiFi with an LTE Router (optional) > Integrated Cellular: LTE (optional via JuiceBox LTE charging stations, JuiceRouter or the UPT) > RFID authentication enabled and QR Code payment option
Firmware	> End-to-end AES-256-based encrypted protocols > 90-day, 15-minute interval data storage > Persistent data storage upon power interruption > Over-the-air (OTA) upgradeable firmware
Enclosure	> Dynamic LED lights show charging status: network connectivity, charging in progress, delaying charging, standby, charge complete/EV not drawing power > IP66 Weatherproof, dust-tight, polycarbonate enclosure > IK10: resistant polycarbonate case > Quick-release wall mounting bracket included > Built-in security lock and integrated cable management > Minimum and Maximum Operating temperature: -40°F to 140°F (-40°C to 60°C) > Minimum and Maximum Operating temperature with UPT: -4°F to 140°F (-20°C to 60°C) **Please refer to each JuiceBox Datasheet to confirm the operating temperature by power level and optionality**
Codes & Standards	> FCC Part 15 Class B, NEC 625 compliant, ENERGY STAR® > OCPP 1.6J and OpenADR 2.0b compliant

Refer to the JuiceBox Pro 32, 40, 48 and 80 datasheets for more information.

evcharging.enelx.com/contact | Customer Support +1-844-584-2329 | Commercial Sales +1-844-885-5850 | @enelxwayna | EnelXWayNA | enelxway | @enelxwayna

JuicePedestal

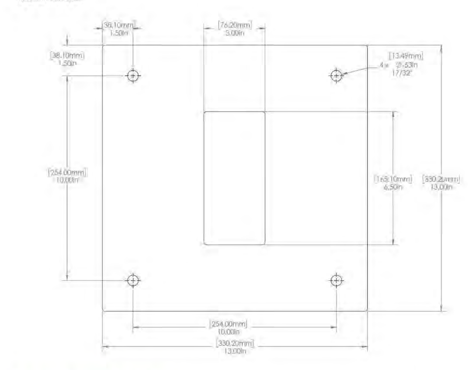

Included Concrete Mount Kit

The JuiceStand, JuiceStand Pro, and JuicePedestal contain a concrete mount kit with the following components.

- Mounting template
- 4 stud anchors (for existing concrete)
- 4 J-hook anchors (for new concrete)
- 4 washers
- 4 hex nuts

Existing Concrete

1. Review all previous sections of this document.
2. Review the included mounting template and verify at least 2 dimensions before proceeding.
3. Review the dimensions of the base mount.
4. Verify the dimensions of the pad:

Note: Always check with the Authority Having Jurisdiction (AHJ) for additional requirements.

At least 14 in x 14 in (35.6 cm x 35.6 cm)
At least 8 in (20.32 cm) thick.

5. Position the mounting template onto the center of the pad.
6. Using a concrete drill bit, drill the anchor holes 4 in deep.

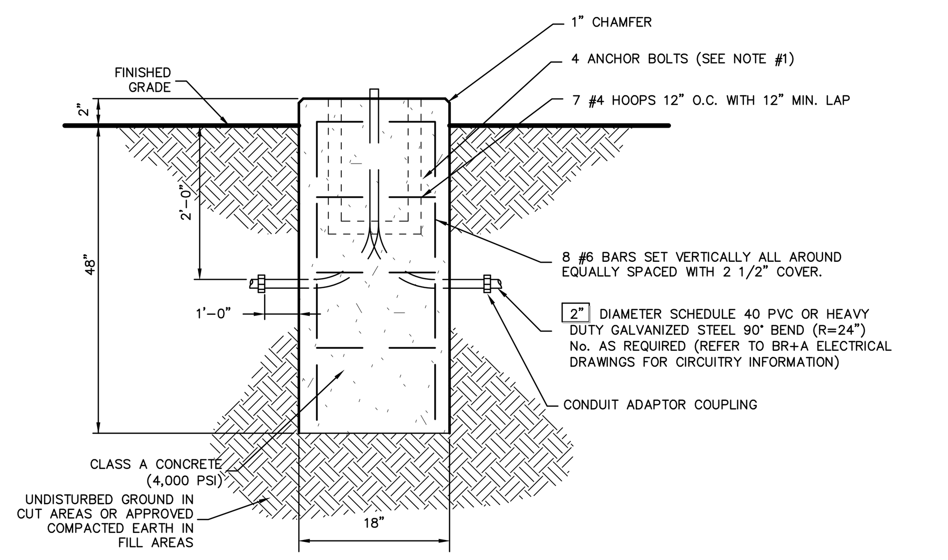

NOTES:

1. IT SHALL BE THE CONTRACTOR'S RESPONSIBILITY TO CHECK AND VERIFY ALL BOLT DIMENSIONS (SIZE, BOLT CIRCLE, ETC.) WITH THE CONTRACTOR WHO WILL BE INSTALLING THE ELECTRICAL VEHICLE CHARGING STATIONS PRIOR TO INSTALLATION OF THE FOUNDATIONS. REFER TO BASE PLATE TEMPLATE ON THIS DRAWING FOR BOLT AND STUB UP LOCATIONS AND SIZES.
2. CHAMFER EXPOSED EDGES OF ALL FOUNDATIONS.

EV CHARGER AND FOUNDATION

57

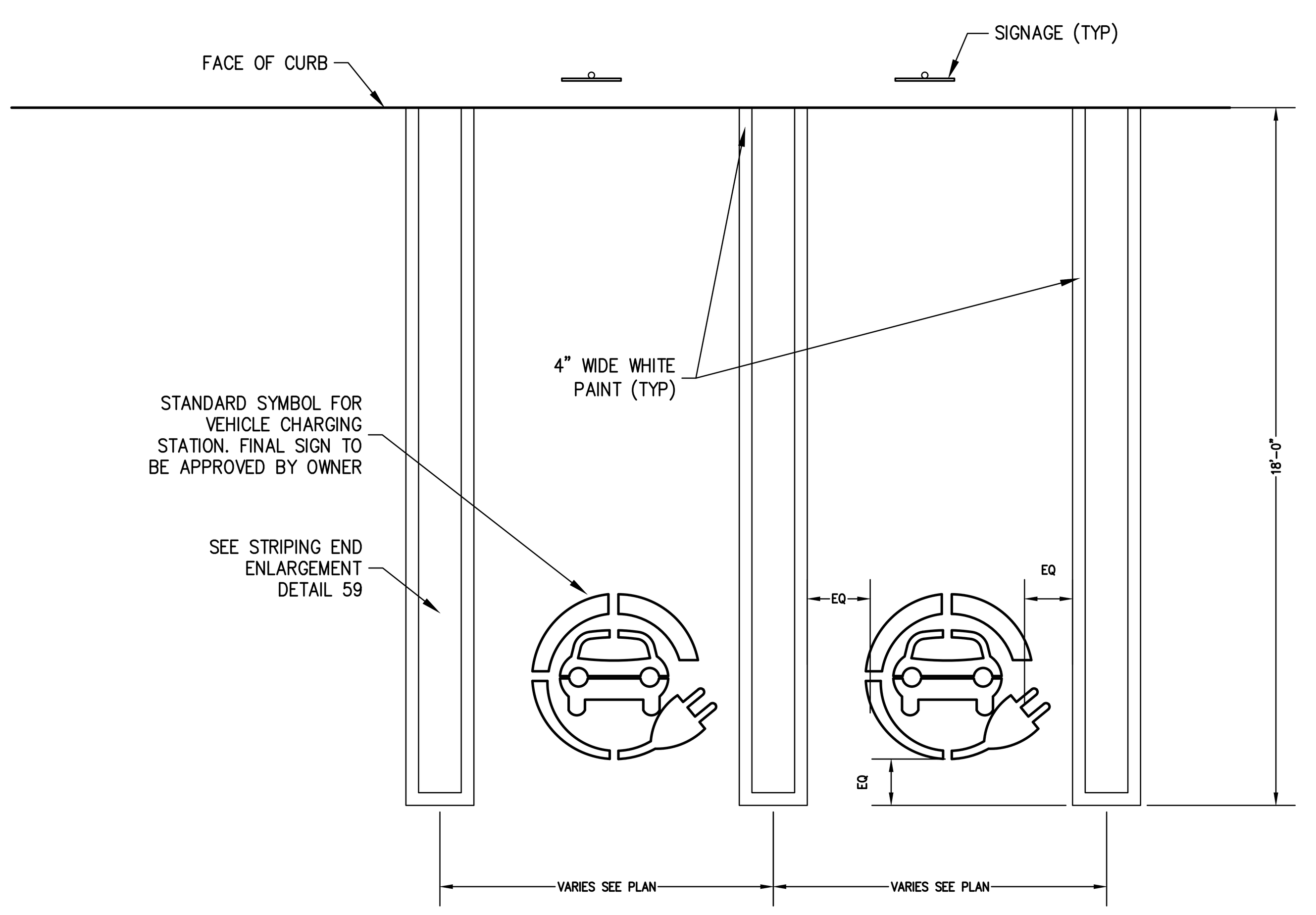

ELECTRIC VEHICLE PARKING STRIPING

58

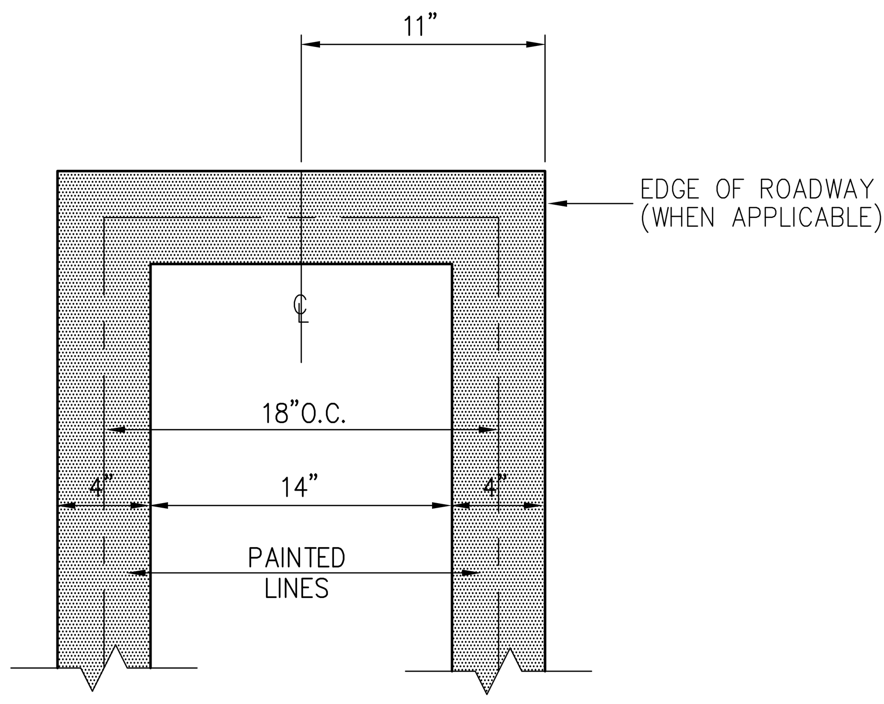

STRIPING END ENLARGEMENT

59

X

X

X

X

X

X

X

No.	Revision	Date	By
1.	REVISED PER PLANNING BOARD COMMENTS	06/19/2023	RFA

Previous Editions Obsolete

APPLICANT:
YM & YH DEVELOPERS LLC
1156 59TH STREET
BROOKLYN, NY 11219

JMC Planning, Engineering, Landscape Architecture & Land Surveying, PLLC
JMC Site Development Consultants, LLC
John Meyer Consulting, Inc.
120 BEDFORD ROAD • ARMONK, NY 10504
voice 914.273.5225 • fax 914.273.2102
www.jmcpllc.com

JMC

CONSTRUCTION DETAILS

FARRELL INDUSTRIAL PARK
ROUTE 300
TOWN OF NEWBURGH, NY

ANY ALTERATION OF PLANS, SPECIFICATIONS, PLATS AND REPORTS BEARING THE SEAL OF A LICENSED PROFESSIONAL ENGINEER OR LICENSED LAND SURVEYOR IS A VIOLATION OF SECTION 7209 OF THE NEW YORK STATE EDUCATION LAW, EXCEPT AS PROVIDED FOR BY SECTION 7209, SUBSECTION 2.

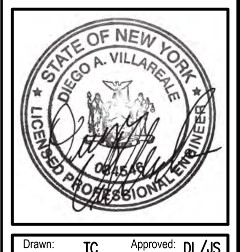

Drawn: TC	Approved: DL/JS
Scale:	NOT TO SCALE
Date:	04/19/2023
Project No:	22127
22127-DETAILS	C-904
Drawing No:	C-904

COPYRIGHT © 2021 by JMC All Rights Reserved. No part of this document may be reproduced, stored in a retrieval system, or transmitted in any form or by means, electronic, mechanical, photocopying, recording or otherwise, without the prior written permission of JMC PLANNING, ENGINEERING, LANDSCAPE ARCHITECTURE & LAND SURVEYING, PLLC | JMC SITE DEVELOPMENT CONSULTANTS, LLC | JOHN MEYER CONSULTING, INC. (JMC). Any modifications or alterations to this document without the written permission of JMC shall render them invalid and unusable.

NOT FOR CONSTRUCTION

TABLE 011-01: PROTECTIVE VEHICLE REQUIREMENTS

CLOSURE TYPE	DURATION	MOBILE (WORK THAT MOVES INTERMITTENTLY OR CONTINUOUSLY, WHERE THE WORK AT ANY SPECIFIC LOCATION COMPLETES WITHIN 15 MINUTES) INCLUDES "STOP AND GO OPERATIONS OF 5 MINUTES OR LESS				SHORT DURATION (WORK THAT OCCUPIES A LOCATION FOR UP TO 1 HOUR)				SHORT TERM (DAYTIME WORK THAT OCCUPIES A LOCATION FOR MORE THAN 1 HOUR WITHIN A SINGLE DAYLIGHT PERIOD)				INTERMEDIATE TERM (WORK THAT OCCUPIES A LOCATION MORE THAN ONE DAYLIGHT PERIOD UP TO 3 CONSECUTIVE DAYS OR NIGHT TIME WORK LASTING MORE THAN 1 HOUR)				LONG TERM (WORK THAT OCCUPIES A LOCATION FOR MORE THAN 3 CONSECUTIVE DAYS)			
	ROAD TYPE & SPEED	FREEWAY	NON-FREEWAY ≥ 45 MPH	35 - 40 MPH	≤ 30 MPH	FREEWAY	≥ 45 MPH	35 - 40 MPH	≤ 30 MPH	FREEWAY	≥ 45 MPH	35 - 40 MPH	≤ 30 MPH	FREEWAY	≥ 45 MPH	35 - 40 MPH	≤ 30 MPH	FREEWAY	≥ 45 MPH	35 - 40 MPH	≤ 30 MPH
	EXPOSURE CONDITIONS[1]																				
LANE CLOSURE OR ENCROACHMENT	WORKERS ON FOOT OR VEHICLE EXPOSED TO TRAFFIC	P, TMIA	P, TMIA	P, TMIA	P	P, TMIA	P, TMIA	P, TMIA	P	P, TMIA	P, TMIA	P, TMIA	P	P, TMIA	P, TMIA	P, TMIA	SEE NOTE 2	P, TMIA	P, TMIA	P, TMIA	SEE NOTE 2
	OTHER HAZARDS NO WORKERS EXPOSED	NA	NA	NA	NA	P, TMIA	P, TMIA	P	P	P, TMIA	P, TMIA	P	SEE NOTE 2	P, TMIA	P, TMIA	SEE NOTE 2	SEE NOTE 2	P, TMIA	P, TMIA	SEE NOTE 2	SEE NOTE 2
SHOULDER CLOSURE OR ENCROACHMENT	WORKERS ON FOOT OR VEHICLE EXPOSED TO TRAFFIC	P, TMIA	P, TMIA	P	P	P, TMIA	P, TMIA	P	P	P, TMIA	P, TMIA	P	P	P, TMIA	P, TMIA	SEE NOTE 2	SEE NOTE 2	P, TMIA	P, TMIA	SEE NOTE 2	SEE NOTE 2
	OTHER HAZARDS NO WORKERS EXPOSED	NA	NA	NA	NA	P, TMIA	P, TMIA	P	P	P, TMIA	P, TMIA	P	SEE NOTE 2	P, TMIA	SEE NOTE 2	SEE NOTE 2	SEE NOTE 2	P, TMIA	SEE NOTE 2	SEE NOTE 2	SEE NOTE 2

LEGEND
P: PROTECTIVE VEHICLE REQUIRED FOR EACH CLOSED LANE & EACH CLOSED PAVED SHOULDER 8' OR WIDER, IF THE WORK SPACE MOVES WITHIN THE STATIONARY CLOSURE, THE PROTECTIVE VEHICLE SHALL BE REPOSITIONED ACCORDINGLY
TMIA: TRUCK/TRAILER MOUNTED IMPACT ATTENUATOR (TMIA) REQUIRED
NA: NOT APPLICABLE

NOTES
1. THE EXPOSURE CONDITIONS ASSUMES THERE IS NO POSITIVE PROTECTION PRESENT
2. EITHER A PROTECTIVE VEHICLE OR THE STANDARD BUFFER SPACE SHALL BE PROVIDED

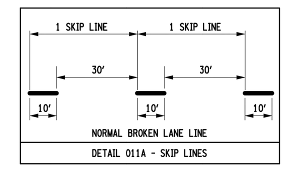

DETAIL 011A - SKIP LINES

TABLE 011-02: TAPER LENGTHS & NUMBER OF CONES CHART

PRECONSTRUCTION POSTED SPEED LIMIT (MPH)	TAPER LENGTH: L (FT.)/ * OF SKIP LINES/ * OF CHANNELIZING DEVICES — LATERAL SHIFT OF TRAFFIC FLOW PATH (FT.) 4	5	6	7	8	9	10	11	12	SHOULDER TAPER LENGTH: L/3 (FT.)/ * OF SKIP LINES/ * OF CHANNELIZING DEVICES — FOR SHOULDER WIDTH ≤ 4 FT.	5 - 7 FT.	≥ 8 FT.
25	40/1/2	80/2/3	80/2/3	80/2/3	80/2/3	120/3/4	120/3/4	120/3/4	120/3/4	40/1/2	40/1/2	40/1/2
30	80/2/3	80/2/3	80/2/3	120/3/4	120/3/4	160/4/5	160/4/5	160/4/5	200/5/6	40/1/2	40/1/2	40/1/2
35	80/2/3	120/3/4	120/3/4	160/4/5	160/4/5	200/5/6	200/5/6	240/6/7	240/6/7	40/1/2	40/1/2	80/2/3
40	120/3/4	160/4/5	160/4/5	200/5/6	240/6/7	240/6/7	280/7/8	320/8/9	320/8/9	40/1/2	80/2/3	80/2/3
45	200/5/6	240/6/7	280/7/8	320/8/9	360/9/10	400/10/11	440/11/12	520/13/14	560/14/15	80/2/3	80/2/3	120/3/4
50	200/5/6	240/6/7	320/8/9	360/9/10	400/10/11	440/11/12	520/13/14	560/14/15	600/15/16	80/2/3	120/3/4	160/4/5
55	240/6/7	280/7/8	320/8/9	400/10/11	440/11/12	520/13/14	560/14/15	600/15/16	680/17/18	80/2/3	120/3/4	160/4/5
60	240/6/7	320/8/9	360/9/10	440/11/12	480/12/13	560/14/15	600/15/16	680/17/18	720/18/19	80/2/3	120/3/4	160/4/5
65	280/7/8	320/8/9	400/10/11	480/12/13	520/13/14	600/15/16	640/16/17	720/18/19	800/19/20	80/2/3	160/4/5	200/5/6

* THIS TABLE WAS CREATED WITH REFERENCE TO MUTCD TABLE 6H-4.
** THE NUMBER OF CHANNELIZING DEVICES SHOWN IS CALCULATED BASED ON A 40FT DEVICE SPACING. THE NUMBER OF CHANNELIZING DEVICES CAN BE ADJUSTED AS NECESSARY.

TABLE 011-03 LONGITUDINAL BUFFER SPACE

PRECONSTRUCTION POSTED SPEED LIMIT (MPH)	DISTANCE (FT.)/ * OF SKIP LINES
25	155 / 4
30	200 / 5
35	250 / 6
40	305 / 8
45	360 / 9
50	425 / 11
55	495 / 13
65	645 / 16

* THIS TABLE IS THE SAME AS MUTCD TABLE 6C-2.

TABLE 011-04: ROLL AHEAD DISTANCE FOR PROTECTIVE VEHICLES

ROLL AHEAD DISTANCE (FT.)/* OF SKIP LINES FOR VEHICLES

PRECONSTRUCTION POSTED SPEED LIMIT (MPH)	MOVING OPERATION (BASED ON PROTECTIVE VEHICLE SPEED OF 15 MPH) MIN	MAX	STATIONARY OPERATION MIN	MAX
≥ 55	200/5	280/7	120/3	200/5
45 - 50	160/4	240/6	80/2	160/4
≤ 40	120/3	200/5	40/1	120/3

* THIS TABLE WAS CREATED WITH REFERENCE TO MUTCD TABLES NY-2 AND NY2-B.

TABLE 011-05 FLARE RATES FOR POSITIVE BARRIER

TYPE OF POSITIVE BARRIER	POSTED SPEED LIMIT 30 MPH	40 MPH	50 MPH	55 MPH	65 MPH
TEMPORARY POSITIVE BARRIER	8:1	11:1	14:1	16:1	20:1
BOX BEAM OR HEAVY POST CORRUGATED BEAM	7:1	9:1	11:1	12:1	15:1

TABLE 011-06 ADVANCE WARNING SIGN SPACING

ROAD TYPE	DISTANCE BETWEEN SIGNS A (FT.)	B (FT.)	C (FT.)	SIGN LEGEND XX	YY
URBAN (≤ 30 MPH*)	100	100	100	AHEAD	AHEAD
URBAN (35-40 MPH*)	200	200	200	AHEAD	AHEAD
URBAN (≥ 45 MPH*)	350	350	350	1000 FT.	AHEAD
RURAL	500	500	500	1500 FT.	1000 FT.
FREEWAY	1000	1500	2640	1 MILE	½ MILE

* PRECONSTRUCTION POSTED SPEED LIMIT.
** THIS TABLE IS THE SAME AS MUTCD TABLE NY6H-3.

TABLE 011-07 TAPER LENGTH FOR TEMPORARY TRAFFIC CONTROL ZONES

TYPE OF TAPER	TAPER LENGTH (L)
MERGING TAPER	L
SHIFTING TAPER	L/2
SHOULDER TAPER	L/3
ONE-LANE, TWO-WAY TRAFFIC TAPER	50 FT. MIN -100 FT. MAX
DOWNSTREAM TAPER	50 FT. MIN -100 FT. MAX

* THIS TABLE IS THE SAME AS MUTCD TABLE 6C-3.

WORK ZONE TRAFFIC CONTROL LEGEND

SYMBOL	DESCRIPTION
	ARROW PANEL
	ARROW PANEL, CAUTION MODE
	ARROW PANEL TRAILER OR SUPPORT
	CHANGEABLE MESSAGE SIGN (PVMS)
	CHANNELIZING DEVICE
	CONE
	CRASH CUSHION/TEMPORARY IMPACT ATTENUATOR
	DIRECTION OF TEMPORARY TRAFFIC DETOUR
	DIRECTION OF TRAFFIC
	AUTOMATED FLAGGER ASSISTANCE DEVICE WITH OPERATOR
	FLAGGER
	FLAG TREE
	LUMINAIRE
	MOWER
	PARKWAY GRASS SHOULDER
	PAVEMENT MARKINGS THAT SHALL BE REMOVED FOR A LONG TERM PROJECT
PVMS	PORTABLE VARIABLE MESSAGE SIGN
	ADVANCE WARNING SIGN WITH ORANGE FLAGS
	TRAILER FOR ARROW PANEL OR PORTABLE VARIABLE MESSAGE SIGN (PVMS)

WORK ZONE TRAFFIC CONTROL LEGEND

SYMBOL	DESCRIPTION
	SIGN, TEMPORARY
	SPOTTER
	TEMPORARY POSITIVE BARRIER
	TEMPORARY POSITIVE BARRIER WITH WARNING LIGHTS
	TEMPORARY TRAFFIC SIGNAL HEAD
	TYPE III BARRICADE
	WARNING LIGHTS
	WORK AREA
	WORK VEHICLE
	WORK VEHICLE (MULCHING/HERBICIDE OPERATION)
	WORK VEHICLE (PAVEMENT MARKING)
	WORK VEHICLE (SIGNAL WORK)
	24,000LB PROTECTIVE VEHICLE WITH TRUCK/TRAILER MOUNTED ATTENUATOR (TMIA)
	24,000LB PROTECTIVE VEHICLE WITHOUT TRUCK/ TRAILER MOUNTED ATTENUATOR

NEW YORK STATE OF OPPORTUNITY. Department of Transportation
U.S. CUSTOMARY STANDARD SHEET
WORK ZONE TRAFFIC CONTROL GENERAL TABLES AND LEGEND
APPROVED DECEMBER 2, 2021 — ISSUED UNDER EI 21-028
Robert Limoges
ROBERT LIMOGES, P.E. DIRECTOR, OTSM
619-011

NYSDOT WORK ZONE TRAFFIC CONTROL GENERAL TABLES AND LEGEND — H10

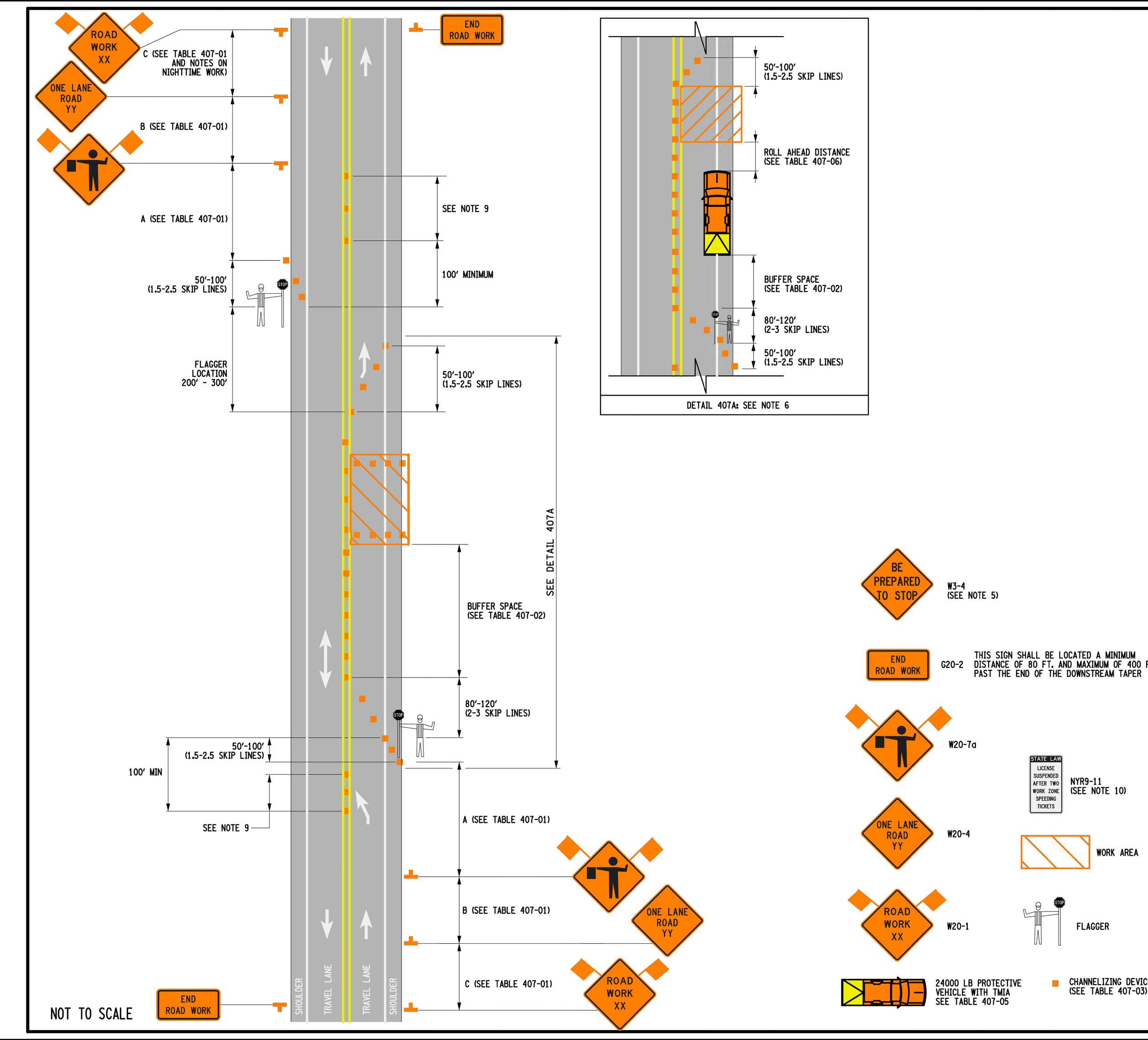

NOTES:

1. INTERMEDIATE-TERM IS STATIONARY WORK THAT OCCUPIES A LOCATION MORE THAN ONE DAYLIGHT PERIOD UP TO 3 CONSECUTIVE DAYS, OR NIGHTTIME WORK LASTING MORE THAN 1 HOUR.
2. WHEN A SIDE ROAD OR DRIVEWAY INTERSECTS THE ROADWAY WITHIN A WORK ZONE TRAFFIC CONTROL AREA, ADDITIONAL TEMPORARY TRAFFIC CONTROL DEVICES AND/OR FLAGGERS SHALL BE PLACED AS NEEDED. ADDITIONAL FLAGGERS SHALL BE LOCATED AT ALL INTERSECTIONS AND COMMERCIAL DRIVEWAYS LOCATED WITHIN OR NEAR THE ACTIVE WORK SPACE. NO WORK ACTIVITY, EQUIPMENT, OR STORAGE OF VEHICLES, OR MATERIAL SHALL OCCUR WITHIN THE BUFFER SPACE AT ANY TIME.
3. CHANNELIZING DEVICE SPACING (CENTER TO CENTER) SHALL NOT EXCEED 20' IN THE ACTIVE WORK SPACE.
4. CHANNELIZING DEVICES SHALL BE PLACED TRANSVERSELY A MINIMUM OF EVERY 800' AS SHOWN WHEN A PAVED SHOULDER HAVING A WIDTH OF 8' OR GREATER IS CLOSED FOR A DISTANCE GREATER THAN 800'.
5. IF THE TRAFFIC IS EXPECTED TO QUEUE PAST THE W20-4 SIGN, A W3-4 SIGN SHOULD BE ADDED HALFWAY BETWEEN THE W20-4 AND W20-1 SIGNS.
6. IF CONDITION WARRANTS, PROTECTIVE VEHICLE WITH APPROPRIATE ROLL AHEAD DISTANCE MAY BE USED IN ADVANCE OF THE WORK AREA. TO USE PROTECTIVE VEHICLE, BUFFER SPACE SHALL BE PROVIDED ACCORDINGLY, AND THE WHEELS SHALL BE ALIGNED WITH THE LANE STRIPING.
7. FLAGGER SIGN (W20-7a) AND ONE LANE ROAD AHEAD SIGN (W20-4) SHALL BE REMOVED, COVERED OR TURNED AWAY FROM ROAD USERS WHEN FLAGGING OPERATIONS ARE NOT OCCURRING.
8. ALL FLAGGERS SHALL USE 24" (MIN.) OCTAGON SHAPED STOP/SLOW PADDLES HAVING 6' STAFF. THE PADDLE IS THE PREFERRED DEVICE, BUT THE FLAG MAY BE USED AT INTERSECTIONS WHERE THE STOP/SLOW PADDLE WOULD OFFER CONTRADICTING INFORMATION TO DRIVERS TRAVELING IN OPPOSITE DIRECTIONS/LEGS OF THE INTERSECTION OR DURING INCIDENT MANAGEMENT SITUATIONS.
9. CENTERLINE CONES MAY BE ADDED TO ENHANCE THE VISIBILITY OF THE FLAGGER STATION. IF CONES ARE USED, PLACE THEM 100 FT. (MINIMUM) FROM FLAGGER.
10. THE NY9-11 SIGN IS RECOMMENDED. WHEN USED, IT SHALL BE PLACED IN ADVANCE OF THE FIRST ADVANCE WARNING SIGN. THE PLACEMENT DISTANCE SHALL BE 1000' FOR POSTED SPEED LIMITS OF 45 MPH OR HIGHER, AND 300' - 500' FOR POSTED SPEED LIMITS OF LESS THAN 45 MPH.

NOTES ON NIGHTTIME WORK:

N1. WORK OCCURRING AFTER SUNSET AND BEFORE SUNRISE WILL BE CONSIDERED NIGHTTIME OPERATIONS.
N2. ALL SIGNS, STOP / SLOW PADDLES AND RED FLAGS USED TO WARN / ALERT / CONTROL TRAFFIC SHALL BE RETROREFLECTIVE.
N3. ALL WORKERS INVOLVED SHALL WEAR PROTECTIVE HELMET AND NIGHTTIME APPAREL IN ACCORDANCE WITH §107-05A. HIGH VISIBILITY APPAREL AT ALL TIMES.
N4. VEHICLES OPERATING ON THE PAVEMENT OF A CLOSED ROADWAY OR TRAVEL LANE SHALL DISPLAY ROTATING AMBER BEACONS AT ALL TIMES.
N5. LEVEL I ILLUMINATION SHALL BE PROVIDED NEAR THE BEGINNING OF LANE CLOSURE TAPERS AND AT ROAD CLOSURES, INCLUDING THE SETUP AND REMOVAL OF THE CLOSURE TAPERS.
N6. LEVEL II ILLUMINATION SHALL BE PROVIDED FOR FLAGGING STATIONS, ASPHALT PAVING, MILLING, AND CONCRETE PLACEMENT AND/OR REMOVAL OPERATIONS, INCLUDING BRIDGE DECKS, 50 FEET AHEAD OF AND 100 FEET BEHIND A PAVING OR MILLING MACHINE.
N7. LEVEL III ILLUMINATION SHALL BE PROVIDED FOR PAVEMENT OR STRUCTURAL CRACK FILLING, JOINT REPAIR, PAVEMENT PATCHING AND REPAIRS, INSTALLATION OF SIGNAL EQUIPMENT OR OTHER ELECTRICAL/MECHANICAL EQUIPMENT, AND OTHER TASKS INVOLVING FINE DETAILS OR INTRICATE PARTS AND EQUIPMENT.
N8. ALL LIGHTING SHALL BE DESIGNED, INSTALLED, AND OPERATED TO AVOID GLARE THAT AFFECTS TRAFFIC ON THE ROADWAY OR THAT CAUSES ANNOYANCE OR DISCOMFORT FOR RESIDENCES ADJOINING THE ROADWAY.
N9. PRIOR TO THE START OF NIGHTTIME OPERATIONS, A WRITTEN NIGHTTIME OPERATIONS AND LIGHTING PLAN IS REQUIRED FOR APPROVAL.
N10. SEE NIGHTTIME SAFETY BULLETIN, HDM §16.5.7, & STANDARD SPECIFICATIONS §619 FOR ADDITONAL REQUIREMENTS AND CONSIDERATIONS.

REFER TO SHEET 2 OF 2 FOR ALL TABLES

NEW YORK STATE OF OPPORTUNITY. Department of Transportation
U.S. CUSTOMARY STANDARD SHEET
WORK ZONE TRAFFIC CONTROL TWO-LANE TWO-WAY ROADWAY LANE CLOSURE WITH FLAGGERS INTERMEDIATE TERM OPERATIONS (SHEET 1 OF 2)
APPROVED DECEMBER 2, 2021 — ISSUED UNDER EI 21-028
Robert Limoges
ROBERT LIMOGES, P.E. DIRECTOR, OTSM
619-407

NYSDOT TWO-LANE TWO-WAY ROADWAY LANE CLOSURE WITH FLAGGERS — H11

TABLE 407-01: ADVANCE WARNING SIGN SPACING

ROAD TYPE	DISTANCE BETWEEN SIGNS A (FT.)	B (FT.)	C (FT.)	SIGN LEGEND XX	YY
URBAN (≤ 30 MPH*)	100	100	100	AHEAD	AHEAD
URBAN (35-40 MPH*)	200	200	200	AHEAD	AHEAD
URBAN (≥ 45 MPH*)	350	350	350	1000 FT.	AHEAD
RURAL	500	500	500	1500 FT.	1000 FT.

* PRECONSTRUCTION POSTED SPEED LIMIT

TABLE 407-02: LONGITUDINAL BUFFER SPACE

PRECONSTRUCTION POSTED SPEED LIMIT (MPH)	LONGITUDINAL BUFFER SPACE DISTANCE (FT.)/ * OF SKIP LINES
45	360/9
50	425/11
55	495/13
65	645/16

TABLE 407-03: CHANNELIZING DEVICE APPLICATION FOR INTERMEDIATE-TERM STATIONARY WORK ZONES

WORK ZONE PROVISIONS: INTERMEDIATE-TERM STATIONARY WORK ZONES INVOLVE WORK THAT OCCUPIES A LOCATION FOR MORE THAN 1 DAYLIGHT PERIOD UP TO 3 CONSECUTIVE DAYS, OR NIGHTTIME WORK THAT OCCUPIES A LOCATION FOR MORE THAN 1 HOUR	MAXIMUM DEVICE SPACING (CENTER TO CENTER)	DRUMS	STANDARD CONES	TALL CONES	EXTRA TALL CONES	TEMPORARY TUBULAR MARKERS	INTERIM TUBULAR MARKERS	VERTICAL PANELS	OVERSIZED VERTICAL PANELS	TYPE III BARRICADES
SHOULDER/MERGING/ SHIFTING TAPERS	20 FT. *	X							X	
	40 FT.	X							X	
MARKING FOR TRANSVERSE BUMPS[1]	N/A	X[2]			X[2]				X[2]	
TRANSVERSE DEVICE WITHIN CLOSED TRAFFIC LANE AND/OR SHOULDER	800 FT.	X		X	X			X	X	O
REMOVAL OF EXISTING GUIDE RAIL	80 FT. / 40 FT.	X		X	X	X		X	X	O

NOTES: X= ALLOWED, BLANK = NOT ALLOWED, O = OPTIONAL
1. - A TYPE 1 OBJECT MARKER MAY BE USED IN LIEU OF CHANNELIZING DEVICE.
2. - CHANNELIZING DEVICES SHALL BE EQUIPPED WITH A FLASHING WARNING LIGHT.
* SEE NOTE 3 ON SHEET 1 OF 2.

TABLE 407-04: REQUIRED SIGN SIZES*

SIGN	NON-FREEWAY	FREEWAY
G20-2	36x18	48x24
W3-4	36x36	48x48
W20-1	36x36	48x48
W20-4	36x36	48x48
W20-7a	36x36	48x48
WARNING FLAG	18x18	18x18

*FREEWAY SIZES MAY BE USED ON NON-FREEWAY, IF SPACE CONSTRAINTS DO NOT EXIST.

TABLE 407-05: PROTECTIVE VEHICLE REQUIREMENTS

CLOSURE TYPE	ROAD TYPE & SPEED	NON-FREEWAY ≥ 45 MPH	35 - 40 MPH	≤ 30 MPH
	EXPOSURE CONDITIONS[1]			
LANE CLOSURE OR ENCROACHMENT	WORKERS ON FOOT OR VEHICLE EXPOSED TO TRAFFIC	P, TMIA	P, TMIA	SEE NOTE 2
	OTHER HAZARDS NO WORKERS EXPOSED	P, TMIA	SEE NOTE 2	SEE NOTE 2
SHOULDER CLOSURE OR ENCROACHMENT	WORKERS ON FOOT OR VEHICLE EXPOSED TO TRAFFIC	P, TMIA	SEE NOTE 2	SEE NOTE 2
	OTHER HAZARDS NO WORKERS EXPOSED	SEE NOTE 2	SEE NOTE 2	SEE NOTE 2

LEGEND
P: PROTECTIVE VEHICLE REQUIRED FOR EACH CLOSED LANE & EACH CLOSED PAVED SHOULDER 8' OR WIDER, IF THE WORK SPACE MOVES WITHIN THE STATIONARY CLOSURE, THE PROTECTIVE VEHICLE SHALL BE REPOSITIONED ACCORDINGLY
TMIA: TMIA REQUIRED
NOTES:
1. THE EXPOSURE CONDITIONS ASSUME THERE IS NO POSITIVE PROTECTION PRESENT
2. EITHER A PROTECTIVE VEHICLE OR THE STANDARD BUFFER SPACE SHALL BE PROVIDED

TABLE 407-06: ROLL AHEAD DISTANCE

ROLL AHEAD DISTANCE (FT.)/* OF SKIP LINES FOR VEHICLES

PRECONSTRUCTION POSTED SPEED LIMIT (MPH)	STATIONARY OPERATION MIN	MAX
≥ 55	120/3	200/5
45 - 50	80/2	160/4
≤ 40	40/1	120/3

NYSDOT TWO-LANE TWO-WAY ROADWAY LANE CLOSURE WITH FLAGGERS — H12

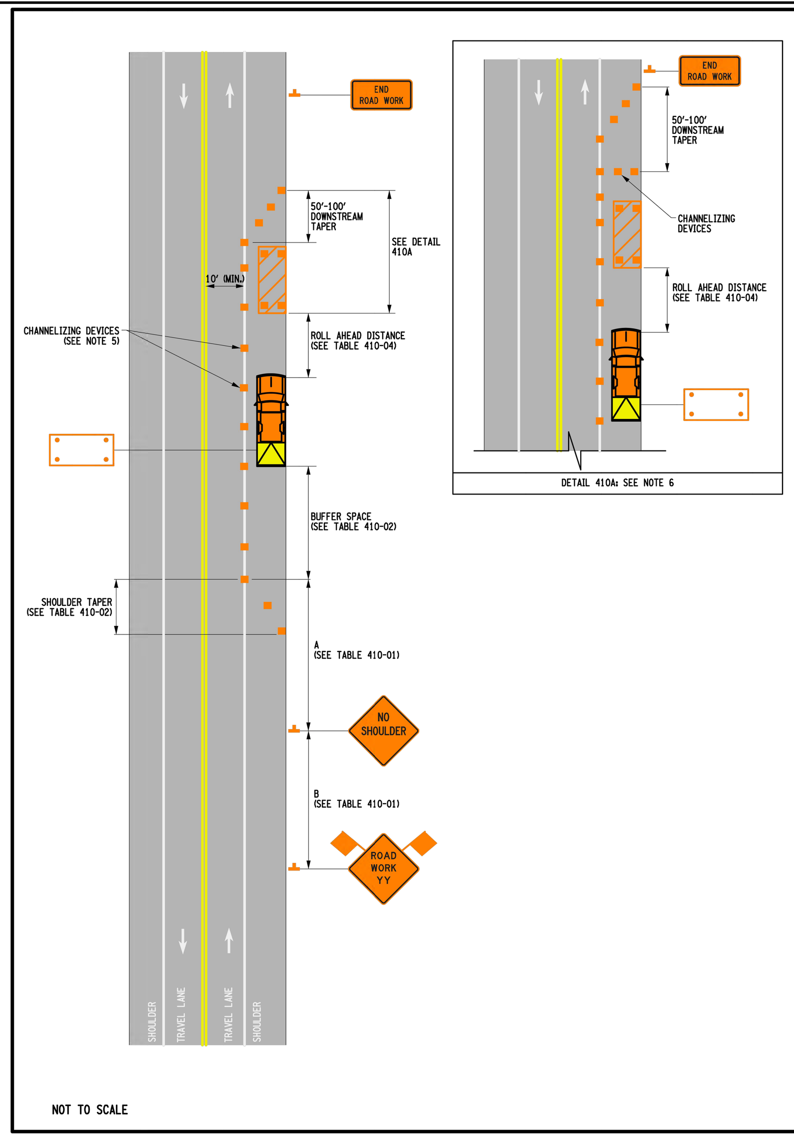

NOT TO SCALE

NOTES:

1. INTERMEDIATE-TERM IS STATIONARY WORK THAT OCCUPIES A LOCATION MORE THAN ONE DAYLIGHT PERIOD UP TO 3 CONSECUTIVE DAYS, OR NIGHTTIME WORK LASTING MORE THAN 1 HOUR.
2. NO WORK ACTIVITY OR STORAGE OF EQUIPMENT, VEHICLES, OR MATERIAL SHOULD OCCUR WITHIN A BUFFER SPACE.
3. XX IS THE EXPECTED OVERALL LENGTH OF THE OPERATION TO BE COMPLETED WITHIN THE WORK DAY. A SUPPLEMENTAL DISTANCE PLAQUE W7-3a SHALL BE USED WITH SIGN W20-1 WHEN THE DISTANCE BETWEEN THE ADVANCE WARNING SIGNS AND WORK MAY BECOME GREATER THAN 2 MILES AS A RESULT OF THE FOLLOWING SITUATIONS:
   - MULTIPLE WORK LOCATIONS ARE ANTICIPATED WITHIN XX MILES FROM THE W20-1 SIGN
   - WORK AREA WILL BE RELOCATED DURING THE DURATION OF THE WORK WITHIN XX MILES FROM THE W20-1 SIGN

   THE SUPPLEMENT SIGN W7-3a SHALL INDICATE THE MAXIMUM ANTICIPATED DISTANCE BETWEEN THE W20-1 SIGN AND THE FARTHEST WORK LOCATION.
4. WHEN MULTIPLE WORK LOCATIONS EXIST WITHIN XX MILES FROM THE W20-1 SIGN, A G20-1 SIGN SHALL BE PLACED EVERY TWO MILES INDICATING THE DISTANCE FROM THE SIGN TO THE FARTHEST WORK LOCATION.
5. CHANNELIZING DEVICE SPACING (CENTER TO CENTER) SHALL NOT EXCEED 20' IN THE ACTIVE WORK SPACE.
6. CHANNELIZING DEVICES SHALL BE PLACED TRANSVERSELY A MINIMUM OF EVERY 800' AS SHOWN WHEN A PAVED SHOULDER HAVING A WIDTH OF 8' OR GREATER IS CLOSED FOR A DISTANCE GREATER THAN 800'.
7. THE PROTECTIVE VEHICLE(S) SHALL MAINTAIN THE APPROPRIATE ROLL AHEAD DISTANCE, BE AN UNOCCUPIED TRUCK POSITIONED PARALLEL TO TRAFFIC, PARKING BRAKE SET, PLACED IN 2ND GEAR (MANUAL TRANSMISSIONS /ENGINE OFF) OR PARK / NEUTRAL (AUTOMATIC TRANSMISSIONS) AND HAVE THE FRONT WHEELS ALIGNED WITH THE LANE STRIPING.

NOTES ON NIGHTTIME WORK:

N1. WORK OCCURRING AFTER SUNSET AND BEFORE SUNRISE WILL BE CONSIDERED NIGHTTIME OPERATIONS.
N2. ALL SIGNS, STOP/SLOW PADDLES AND RED FLAGS USED TO WARN/ALERT/CONTROL TRAFFIC SHALL BE RETROREFLECTIVE.
N3. ALL WORKERS INVOLVED SHALL WEAR PROTECTIVE HELMETS AND NIGHTTIME APPAREL IN ACCORDANCE WITH §107-05A. HIGH VISIBILITY APPAREL AT ALL TIMES.
N4. VEHICLES OPERATING ON THE PAVEMENT OF A CLOSED ROADWAY OR TRAVEL LANE SHALL DISPLAY ROTATING AMBER BEACONS OR FLASHING LED BEACONS AT ALL TIMES.
N5. LEVEL I ILLUMINATION SHALL BE PROVIDED NEAR THE BEGINNING OF LANE CLOSURE TAPERS AND AT ROAD CLOSURES, INCLUDING THE SETUP AND REMOVAL OF THE CLOSURE TAPERS.
N6. LEVEL II ILLUMINATION SHALL BE PROVIDED FOR FLAGGING STATIONS, ASPHALT PAVING, MILLING, AND CONCRETE PLACEMENT AND/OR REMOVAL OPERATIONS, INCLUDING BRIDGE DECKS, 50 FEET AHEAD OF AND 100 FEET BEHIND A PAVING OR MILLING MACHINE.
N7. LEVEL III ILLUMINATION SHALL BE PROVIDED FOR PAVEMENT OR STRUCTURAL CRACK FILLING, JOINT REPAIR, PAVEMENT PATCHING AND REPAIRS, INSTALLATION OF SIGNAL EQUIPMENT OR OTHER ELECTRICAL/MECHANICAL EQUIPMENT, AND OTHER TASKS INVOLVING FINE DETAILS OR INTRICATE PARTS AND EQUIPMENT.
N8. ALL LIGHTING SHALL BE DESIGNED, INSTALLED, AND OPERATED TO AVOID GLARE THAT AFFECTS TRAFFIC ON THE ROADWAY OR THAT CAUSES ANNOYANCE OR DISCOMFORT FOR RESIDENCES ADJOINING THE ROADWAY.
N9. PRIOR TO THE START OF NIGHTTIME OPERATIONS, A WRITTEN NIGHTTIME OPERATIONS AND LIGHTING PLAN IS REQUIRED FOR APPROVAL.
N10. SEE NIGHTTIME SAFETY BULLETIN, HDM §16.5.7, & STANDARD SPECIFICATIONS §619 FOR ADDITONAL REQUIREMENTS AND CONSIDERATIONS.

END ROAD WORK — G20-2 — THIS SIGN SHALL BE LOCATED A MINIMUM DISTANCE OF 80 FT. AND MAXIMUM OF 400 FT. PAST THE END OF THE DOWNSTREAM TAPER
NO SHOULDER — W8-23
ROAD WORK YY — W20-1
NEXT XX MILES — W7-3a (SEE NOTE 3)
ROAD WORK NEXT XX MILES — G20-1 (SEE NOTE 4)
24000 LB PROTECTIVE VEHICLE WITH TMIA SEE TABLE 410-03
WORK AREA
CHANNELIZING DEVICE (SEE TABLE 410-05)
ARROW PANEL (CAUTION MODE)

REFER TO SHEET 2 OF 2 FOR ALL TABLES

NEW YORK STATE OF OPPORTUNITY. Department of Transportation
U.S. CUSTOMARY STANDARD SHEET
WORK ZONE TRAFFIC CONTROL TWO-LANE TWO-WAY ROADWAY SHOULDER CLOSURE INTERMEDIATE TERM OPERATION (SHEET 1 OF 2)
APPROVED DECEMBER 2, 2021 — ISSUED UNDER EI 21-028
Robert Limoges
ROBERT LIMOGES, P.E. DIRECTOR, OTSM
619-410

NYSDOT TWO-LANE TWO-WAY ROADWAY SHOULDER CLOSURE — H13

TABLE 410-01: ADVANCE WARNING SIGN SPACING

ROAD TYPE	DISTANCE BETWEEN SIGNS A (FT.)	B (FT.)
URBAN (≤ 30 MPH*)	100	100
URBAN (35-40 MPH*)	200	200
URBAN (≥ 45 MPH*)	350	350
RURAL	500	500

* PRECONSTRUCTION POSTED SPEED LIMIT

TABLE 410-02: LONGITUDINAL BUFFER SPACE AND TAPER LENGTHS

PRECONSTRUCTION POSTED SPEED LIMIT (MPH)	LONGITUDINAL BUFFER SPACE DISTANCE (FT.)/ * OF SKIP LINES	TAPER LENGTH: L (FT.)/ * OF SKIP LINES/ * OF CHANNELIZING DEVICES — FOR LANE WIDTH IN FT. (LATERAL SHIFT OF TRAFFIC FLOW PATH) 10	11	12	SHOULDER TAPER LENGTH: L/3 (FT.)/ * OF SKIP LINES/ * OF CHANNELIZING DEVICES — FOR SHOULDER WIDTH ≤ 4 FT.	5 - 7 FT.	≥ 8 FT.
25	155/4	120/3/4	120/3/4	120/3/4	40/1/2	40/1/2	40/1/2
30	200/5	160/4/5	160/4/5	200/5/6	40/1/2	40/1/2	40/1/2
35	250/6	200/5/6	240/6/7	240/6/7	40/1/2	40/1/2	80/2/3
40	305/8	280/7/8	320/8/9	320/8/9	40/1/2	80/2/3	80/2/3
45	360/9	440/11/12	520/13/14	560/14/15	80/2/3	80/2/3	120/3/4
50	425/11	520/13/14	560/14/15	600/15/16	80/2/3	120/3/4	160/4/5
55	495/13	560/14/15	600/15/16	680/17/18	80/2/3	120/3/4	160/4/5

TABLE 410-03: PROTECTIVE VEHICLE REQUIREMENTS

CLOSURE TYPE	ROAD TYPE & SPEED	NON-FREEWAY ≥ 45 MPH	35 - 40 MPH	≤ 30 MPH
	EXPOSURE CONDITIONS[1]			
LANE CLOSURE OR ENCROACHMENT	WORKERS ON FOOT OR VEHICLE EXPOSED TO TRAFFIC	P, TMIA	P, TMIA	SEE NOTE 2
	OTHER HAZARDS NO WORKERS EXPOSED	P, TMIA	SEE NOTE 2	SEE NOTE 2
SHOULDER CLOSURE OR ENCROACHMENT	WORKERS ON FOOT OR VEHICLE EXPOSED TO TRAFFIC	P, TMIA	SEE NOTE 2	SEE NOTE 2
	OTHER HAZARDS NO WORKERS EXPOSED	SEE NOTE 2	SEE NOTE 2	SEE NOTE 2

LEGEND
P: PROTECTIVE VEHICLE REQUIRED FOR EACH CLOSED LANE & EACH CLOSED PAVED SHOULDER 8' OR WIDER, IF THE WORK SPACE MOVES WITHIN THE STATIONARY CLOSURE, THE PROTECTIVE VEHICLE SHALL BE REPOSITIONED ACCORDINGLY
TMIA: TMIA REQUIRED
NOTES:
1. THE EXPOSURE CONDITIONS ASSUME THERE IS NO POSITIVE PROTECTION PRESENT
2. EITHER A PROTECTIVE VEHICLE OR THE STANDARD BUFFER SPACE SHALL BE PROVIDED

TABLE 410-04: ROLL AHEAD DISTANCE

ROLL AHEAD DISTANCE (FT.)/* OF SKIP LINES FOR VEHICLES

PRECONSTRUCTION POSTED SPEED LIMIT (MPH)	STATIONARY OPERATION MIN	MAX
≥ 55	120/3	200/5
45 - 50	80/2	160/4
≤ 40	40/1	120/3

TABLE 410-05: CHANNELIZING DEVICE APPLICATION FOR INTERMEDIATE-TERM STATIONARY WORK ZONES

WORK ZONE PROVISIONS: INTERMEDIATE-TERM STATIONARY WORK ZONES INVOLVE WORK THAT OCCUPIES A LOCATION FOR MORE THAN 1 DAYLIGHT PERIOD UP TO 3 CONSECUTIVE DAYS, OR NIGHTTIME WORK THAT OCCUPIES A LOCATION FOR MORE THAN 1 HOUR	MAXIMUM DEVICE SPACING (CENTER TO CENTER)	DRUMS	STANDARD CONES	TALL CONES	EXTRA TALL CONES	TEMPORARY TUBULAR MARKERS	INTERIM TUBULAR MARKERS	VERTICAL PANELS	OVERSIZED VERTICAL PANELS	TYPE III BARRICADES
SHOULDER/MERGING/ SHIFTING TAPERS	20 FT. *	X							X	
	40 FT.	X							X	
MARKING FOR TRANSVERSE BUMPS[1]	N/A	X[2]	X		X[2]				X[2]	
TRANSVERSE DEVICE WITHIN CLOSED TRAFFIC LANE AND/OR SHOULDER	800 FT.	X		X	X			X	X	O
REMOVAL OF EXISTING GUIDE RAIL	80 FT. / 40 FT.	X		X	X	X		X	X	O

NOTES: X= ALLOWED, BLANK = NOT ALLOWED, O = OPTIONAL
1. - A TYPE 1 OBJECT MARKER MAY BE USED IN LIEU OF CHANNELIZING DEVICE.
2. - CHANNELIZING DEVICES SHALL BE EQUIPPED WITH A FLASHING WARNING LIGHT.
* SEE NOTE 5 ON SHEET 1 OF 2.

TABLE 410-06: REQUIRED SIGN SIZES*

SIGN	NON-FREEWAY	FREEWAY
G20-2	36x18	48x24
W20-1	36x36	48x48
W21-5	36x36	48x48
W7-3a	24x18	36x30
G20-1	36x18	48x24
WARNING FLAG	18x18	18x18

*FREEWAY SIZES MAY BE USED ON NON-FREEWAY, IF SPACE CONSTRAINTS DO NOT EXIST.

NEW YORK STATE OF OPPORTUNITY. Department of Transportation
U.S. CUSTOMARY STANDARD SHEET
WORK ZONE TRAFFIC CONTROL TWO-LANE TWO-WAY ROADWAY SHOULDER CLOSURE INTERMEDIATE TERM OPERATION (SHEET 2 OF 2)
APPROVED APRIL 8, 2022 — ISSUED UNDER EI 22-008
Robert Limoges
ROBERT LIMOGES, P.E. DIRECTOR, OTSM
619-410

NYSDOT TWO-LANE TWO-WAY ROADWAY SHOULDER CLOSURE — H14

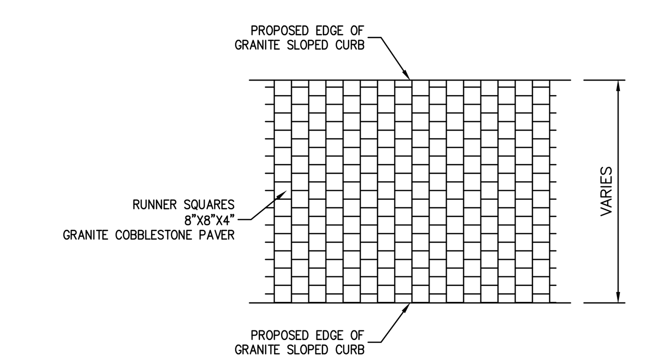

PLAN VIEW

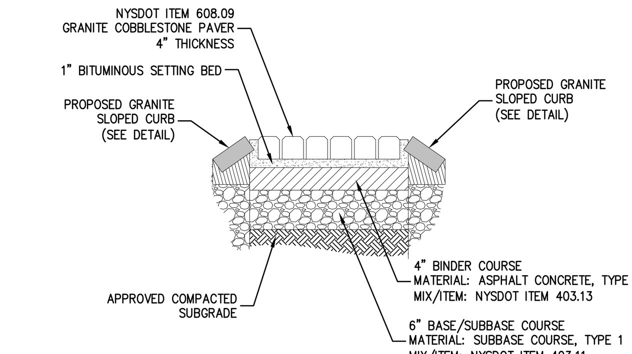

CROSS SECTION

PAVER NOTES:

1. SAMPLES OF THE PAVERS SHALL BE SUBMITTED TO THE CITY ENGINEER FOR COLOR APPROVAL.
2. WHEN PAVING BLOCKS ARE BEING INSTALLED, AN EVEN MIX OF PAVERS ARE TO BE TAKEN FROM THREE DIFFERENT PALLETS.
3. WHERE REQUIRED, CUT PAVING BLOCKS WITH WET OR DIAMOND BLADE SAW, NEATLY AND WITHOUT DAMAGED EDGES.
4. PAVERS SHALL BE SET AS SHOWN IN PLANS AND DETAILS.
5. COMPACT SOIL SUBGRADE AND SUBBASE MATERIAL AS APPROVED BY CITY ENGINEER.
6. GRANITE COBBLESTONE PAVERS SHALL BE FROM A SINGLE SOURCE.

GENERAL NOTES:

1. THICKNESSES INDICATED REFER TO COMPACTED MEASURE.
2. MATERIAL AND MIX/ITEM NUMBERS REFER TO:
   NEW YORK STATE DEPARTMENT OF TRANSPORTATION STANDARD SPECIFICATIONS

GRANITE COBBLESTONE PAVER ISLAND (ON SITE) — H15

A	B	C	H	AREA (SQ. FT.)	SEE NOTE
12"	12"	8"	1½"	1.0	
18"	18"	12"	1½"	2.3	
12"	6"	4"	1½"	0.5	
12"	8"	4"	1½"	0.7	
12"	9"	4"	1½"	0.8	
18"	6"	4"	1½"	0.8	
18"	12"	6"	1½"	1.5	
6"	12"	6"	1½"	0.5	
8"	16"	10"	1½"	0.9	
9"	12"	6"	1½"	0.8	
12"	18"	12"	1½"	1.5	
12"	24"	18"	1½"	2.0	
12"	30"	24"	1½"	2.5	
12"	36"	14"	1½"	3.0	2
12"	48"	18"	1½"	4.0	2
12"	54"	24"	1½"	4.5	2
12"	60"	24"	1½"	5.0	2
18"	24"	18"	1½"	3.0	
18"	30"	24"	1½"	3.8	
18"	36"	14"	1½"	4.5	2
18"	48"	18"	1½"	6.0	2
18"	54"	24"	1½"	6.8	2
18"	60"	24"	1½"	7.5	2

A	B	C	D	H	AREA (SQ. FT.)	SEE NOTE
21"	21"	15"	15"	1½"	3.1	
24"	24"	18"	18"	1½"	4.0	
30"	30"	24"	24"	1½"	6.3	
20"	18"	12"	15"	1½"	2.5	
21"	15"	9"	15"	1½"	2.2	
24"	6"	3"	18"	1½"	1.0	
24"	8"	4"	18"	1½"	1.3	
24"	12"	6"	18"	1½"	2.0	
24"	15"	9"	18"	1½"	2.5	
24"	18"	12"	18"	1½"	3.0	
30"	10"	6"	24"	1½"	2.1	
30"	15"	9"	24"	1½"	3.1	
30"	18"	12"	24"	1½"	3.8	
30"	21"	15"	24"	1½"	4.4	
30"	24"	18"	24"	1½"	5.0	
24"	30"	22"	18"	1½"	5.0	
24"	36"	24"	18"	1½"	6.0	
30"	36"	24"	24"	1½"	7.5	
24"	54"	24"	18"	1½"	9.0	2
30"	42"	18"	24"	1½"	8.8	2

A	B	C	D	H	POST SPACING	AREA (SQ. FT.)	SEE NOTE
36"	12"	6"	15"	1½"	18"	3.0	
36"	18"	12"	15"	1½"	18"	4.5	
36"	20"	12"	15"	1½"	18"	5.0	
36"	24"	18"	15"	1½"	18"	6.0	
36"	30"	24"	15"	1½"	18"	7.5	
36"	36"	24"	15"	3"	18"	9.0	
42"	21"	12"	18"	1½"	18"	6.1	
42"	26"	18"	18"	1⅞"	18"	7.6	
42"	30"	24"	18"	1⅞"	18"	8.8	
45"	36"	24"	19½"	2¼"	24"	11.3	
48"	18"	12"	21"	1½"	24"	6.0	
48"	24"	18"	21"	1⅞"	24"	8.0	
48"	30"	24"	21"	2¼"	24"	10.0	
48"	36"	24"	21"	2¼"	24"	12.0	
54"	18"	12"	24"	1⅞"	24"	6.8	
60"	24"	18"	27"	1½"	30"	10.0	
60"	30"	24"	27"	2¼"	30"	12.5	
36"	48"	18"	15"	2¼"	18"	12.0	2
36"	54"	24"	15"	2¼"	18"	13.5	2
36"	60"	24"	15"	2¼"	18"	15.0	2
42"	60"	24"	18"	3"	24"	17.5	2
48"	60"	24"	21"	3"	24"	20.0	2
42"	42"	18"	21"	3"	24"	12.3	2
48"	48"	18"	21"	3"	24"	16.0	2
60"	48"	18"	27"	3"	30"	20.0	2
64"	42"	18"	27"	3"	30"	18.7	2

A	B	C	D	E	G	H	POST SPACING	AREA (SQ. FT.)	PAYMENT AREA (SQ. FT.)
40"	30"	10"				1⅞"	9"	3.8	7.1
48"	36"	12"				2"	12"	5.5	10.3
64"	48"	11"	6"	18"	17"	3"	12"	9.7	18.1

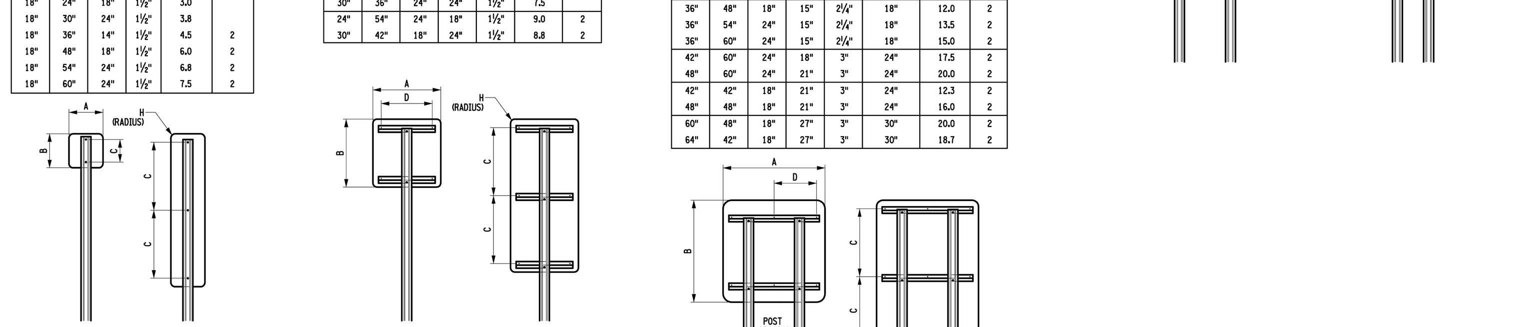

A	C	D	E	G	H	POST SPACING	AREA (SQ. FT.)	PAYMENT AREA (SQ. FT.)
30"	16"	12"	12"	4"	1⅞"		4.6	6.3
36"	18"	18"	15"	4"	2¼"	18"	6.6	9.0
48"	24"	24"	21"	6"	3"	24"	11.6	16.0

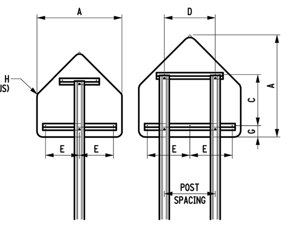

NOTES:

1. SIGN BLANKS SHALL BE 10 GAUGE THICK ALUMINUM. FIBERGLASS REINFORCED PLASTIC MAY BE USED FOR SIGN PANELS UP TO 48" X 48".
2. THESE PANELS USE THE "C" DIMENSION TWICE FOR EITHER MOUNTING HOLES OR HORIZONTAL Z BARS.
3. THE "PAYMENT AREA", WHICH INCLUDES FABRICATION WASTAGE, SHALL BE USED ONLY FOR DETERMINING PAYMENT FOR NON-RECTANGULAR SIGN BLANKS.
4. INTERMEDIATE SIZE SIGN BLANKS THAT ARE NOT SHOWN, SHALL BE FABRICATED TO THE CLOSEST SHOWN SIZE.
5. SIGN PANELS WIDER THAN SHOWN SHALL BE FABRICATED AS SHOWN ON THE CURRENT "LARGE GUIDE SIGNS" STANDARD SHEET.
6. ADDITIONAL SIGN BLANK DIMENSIONS ARE GIVEN IN "STANDARD HIGHWAY SIGNS", FEDERAL HIGHWAY ADMINISTRATION.
7. THE HORIZONTAL Z BAR LENGTH SHALL BE A MINIMUM OF 1" LONGER THAN THE CENTER TO CENTER DISTANCE BETWEEN EXTREME MOUNTING HOLES. WHERE POSTS ARE LOCATED AT THE END OF HORIZONTAL Z BAR, THE HORIZONTAL Z BAR SHALL EXTEND BEYOND THE SIDE OF THE POST A MINIMUM OF ONE ½" AND A MAXIMUM OF 2".
8. ALUMINUM Z BARS WEIGHING ONE POUND PER FOOT AND MEASURING Z 2⅜" X 1¼" X ⅜" MAY BE PREPUNCHED WITH ⅝"ø HOLES AT 1" CENTERS ALONG THE ENTIRE LENGTH.
9. POST AND HORIZONTAL Z BAR ARRANGEMENTS ARE SHOWN FOR COMMON BLANKS. THESE ARRANGEMENTS MAY BE ADJUSTED AS NECESSARY WHERE A NUMBER OF SIGN BLANKS ARE GROUPED IN SIGN ASSEMBLIES OR WHERE ADDITIONAL POSTS ARE REQUIRED DUE TO POST CAPACITY LIMITATIONS.
10. MATERIALS ARE PER SUBSECTIONS:
    730-01 ALUMINUM SIGN PANELS
    730-22 STIFFENERS, OVERHEAD BRACKETS AND MISCELLANEOUS HARDWARE
    730-23 FIBERGLASS REINFORCED PLASTIC SIGN PANELS
11. WHERE 730-05.02 REFLECTIVE SHEETING (CLASS B) OR TYPE IX IS REQUIRED, NYLON OR PLASTIC WASHERS SHALL BE INSTALLED BETWEEN FASTENER BOLT HEADS (OR NUTS) AND THE REFLECTIVE SHEETING ON THE SIGN FACE.
12. POSTS AND POST FOOTINGS SHALL BE INSTALLED AS SPECIFIED ON THE APPROPRIATE STANDARD SHEETS OR AS PER MANUFACTURERS INSTRUCTIONS.
13. THE TOP HOLES SHOWN ON THE HORIZONTAL Z BARS ARE FOR THE PANEL TO HORIZONTAL Z BAR CONNECTIONS. THE BOTTOM HOLES ON THE HORIZONTAL Z BARS ARE FOR THE HORIZONTAL Z BAR TO SIGN POST CONNECTIONS. THE HOLES SHOWN ON PANELS WITHOUT HORIZONTAL Z BARS ARE FOR PANEL TO POST CONNECTIONS.

EFFECTIVE DATE: 01/07/10

STATE OF NEW YORK DEPARTMENT OF TRANSPORTATION
U.S. CUSTOMARY STANDARD SHEET
SIGN BLANK DETAILS (SHEET 1 OF 2)
APPROVED OCTOBER 05, 2009 — ISSUED UNDER EB 09-025
/S/ RICHARD W. LEE, P.E.
FOR THE DEPUTY CHIEF ENGINEER (DESIGN)
645-01

NYSDOT SIGN BLANK DETAILS — H16

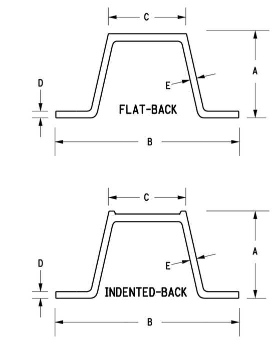

TABLE 1 : FLAT-BACK POST PROPERTIES & DIMENSIONS

POST SIZE	AREA (in²)	I (in⁴)	S (in³)	A	B	C	D	E	MOMENT*
2.00 lb/ft	0.55	0.16	0.19	1.503	3.125	1.250	0.114	0.116	931 ft-lbs
2.50 lb/ft	0.69	0.21	0.26	1.549	3.125	1.250	0.160	0.130	1274 ft-lbs
3.00 lb/ft	0.86	0.34	0.36	1.750	3.500	1.625	0.160	0.150	1764 ft-lbs
4.00 lb/ft	1.15	0.45	0.47	1.810	3.500	1.625	0.220	0.162	2303 ft-lbs

* REDUCE MOMENT CAPACITY BY 25% TO ACCOUNT FOR TORSION EFFECTS IN OPEN CROSS-SECTION SINGLE POST INSTALLATIONS.

TABLE 2 : INDENTED-BACK POST PROPERTIES & DIMENSIONS

POST SIZE	AREA (in²)	I (in⁴)	S (in³)	A	B	C	D	E	MOMENT*
2.00 lb/ft	0.60	0.19	0.24	1.562	3.088	1.214	0.113	0.112	931 ft-lbs
2.50 lb/ft	0.74	0.25	0.30	1.607	3.088	1.214	0.155	0.121	1274 ft-lbs
3.00 lb/ft	0.90	0.38	0.45	1.825	3.458	1.577	0.157	0.140	1764 ft-lbs
4.00 lb/ft	1.16	0.53	0.59	1.895	3.551	1.577	0.225	0.154	2303 ft-lbs

* REDUCE MOMENT CAPACITY BY 25% TO ACCOUNT FOR TORSION EFFECTS IN OPEN CROSS-SECTION SINGLE POST INSTALLATIONS.

TABLE 3: MAXIMUM NUMBER OF POSTS WITHIN 7 FT.SWATH

SOIL SLOPES: 1 UNSTABLE, 2 STEEP, 3, 4 MODERATE, 5 FLAT (VERTICAL / HORIZONTAL)

EMBEDMENT TYPE	SOIL SLOPE	S - 1 NON-PLASTIC (MED TO VERY COMPACT) MAX NO. OF POSTS	MIN. EMBEDMENT	SOIL PL	S - 2 NON-PLASTIC (LOOSE TO VERY LOOSE) MAX NO. OF POSTS	MIN. EMBEDMENT	SOIL PL
EZE-ERECT	FLAT	2	38	NO	1	38	YES
	MODERATE	2	54	NO	1	54	YES
	STEEP	2	60	NO	1	60	YES
BASE-BOLTED	FLAT	3	38	NO	3	60	YES
	MODERATE	3	54	NO	3	60	YES
	STEEP	3	60	NO	3	60	YES

POSTS SHALL BE PRODUCED FROM STANDARD "T" RAIL STEEL WEIGHING 91 LB/YD OR MORE ACCORDING TO ASTM A-499, GRADE 60, HAVING A 70 KSI MINIMUM YIELD (SEE TABLES 1 & 2). POST WEIGHT IS FROM 2.00 TO 4.00 LBS/FT BEFORE PUNCHING.

SIGN POSTS SHALL BE PUNCHED THEIR FULL LENGTH WITH 3/8" ø HOLES ON 1" CENTERS.

BASE POSTS SHALL BE PUNCHED WITH A MINIMUM OF TWENTY-FOUR 3/8" ø HOLES ON 1" CENTERS (TO ACCOMODATE OPTIONAL SOIL PLATE) WITH THE FIRST HOLE 1" FROM THE TOP. THE FIRST AND THE FIFTH HOLES SHALL BE 3/8" X 0.500" SLOTS TO FACILITATE CORRECT FIELD ALIGNMENT.

BASE POSTS SHALL BE DRIVEN TO 38" MINIMUM EMBEDMENT (SEE TABLE 3); A MAXIMUM OF 4" MAY PROTRUDE ABOVE THE SURROUNDING GROUND SURFACE.

POSTS SHALL BE HOT-DIP GALVANIZED AFTER FABRICATION IN ACCORDANCE WITH ASTM A-123.

SPLICE HARDWARE SHALL BE AS SUPPLIED OR RECOMMENDED BY THE MANUFACURER, CADMIUM PLATED ACCORDING TO ASTM A-165, TYPE OS, EXCEPT USING CLEAR CHROMATE.

ALL GALVANIZING AND GALVANIZING REPAIRS SHALL BE DONE IN ACCORDANCE WITH §719-01,TYPE III.

AN S-1 SOIL CONDITION SHOULD BE ASSUMED. S-1 INCLUDES SANDS, GRAVELS AND SILTS (AND THEIR MIXTURES) WHICH EXHIBIT PENETRATION VALUES OF 9 OR MORE BLOWS PER FOOT USING A STANDARD 300 LB. DROP HAMMER AND AN 18 INCH FALL. SHOULDER MATERIALS ARE INCLUDED IN THIS CATEGORY.

S-2 INCLUDES UNIFORM SANDS WHICH EXHIBIT PENETRATION VALUES OF LESS THAN 9 BLOWS PER FOOT USING A 300 LB. DROP HAMMER. BEACH SANDS ARE INCLUDED IN THIS CATEGORY.

THE GEOTECHNICAL ENGINEERING BUREAU AND THE STRUCTURES DIVISION SHOULD BE CONTACTED WHEN A POST IS TO BE PLACED IN A PLASTIC (SOFT CLAY OR ORGANIC) DEPOSIT, OR WHEN THE GROUNDWATER ELEVATION IS WITHIN THE MINIMUM EMBEDMENT.

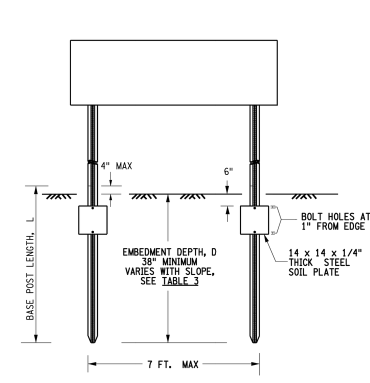

SOIL PLATE DETAIL

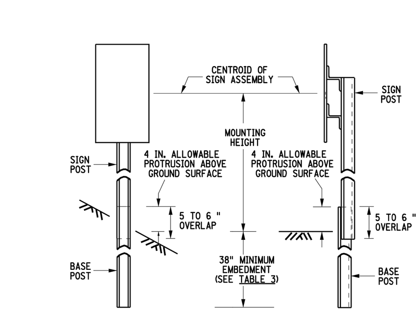

EMBEDMENT DETAILS

THESE DETAILS ARE SKETCH DRAWINGS AND ARE NOT TO SCALE DIMENSIONS ARE IN INCHES UNLESS OTHERWISE NOTED

STATE OF NEW YORK DEPARTMENT OF TRANSPORTATION
MATERIALS DETAILS FOR TYPE A SIGN SUPPORTS
FRANKLIN INDUSTRIES COMPANY U CHANNEL SIGN SUPPORTS STANDARD CAPACITY
SHEET 1 OF 5
ISSUED UNDER EB 06-021
EFFECTIVE: 05/02/2006
REVISION: ,
MD645E-FEZ-01

NYSDOT U CHANNEL SIGN SUPPORTS — H17

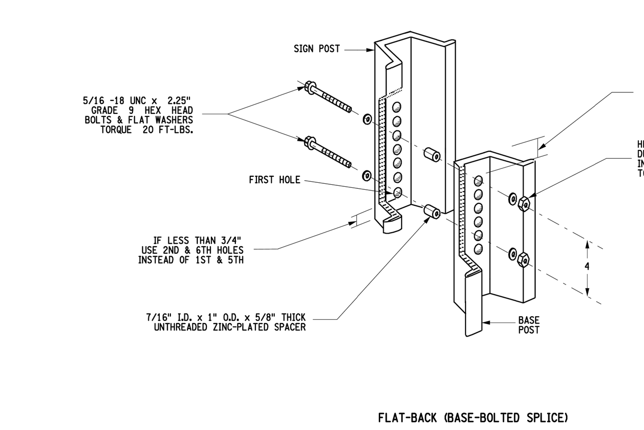

FLAT-BACK (BASE-BOLTED SPLICE)

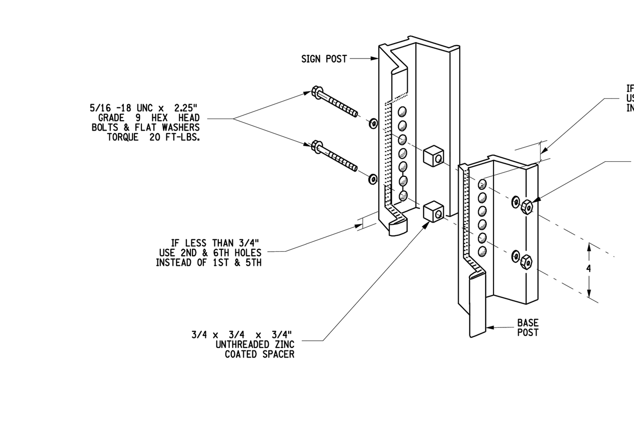

INDENTED-BACK (BASE-BOLTED SPLICE)

NYSDOT U CHANNEL SIGN SUPPORTS — H18

THIS PLAN IS PROVIDED FOR SITE PLAN APPROVAL ONLY. CONTRACTOR SHALL REFER TO JMC DRIVEWAY IMPROVEMENT DRAWINGS FOR DETAILS APPROVED BY NYSDOT.

No.	Revision	Date	By
1.	REVISED PER PLANNING BOARD COMMENTS	06/19/2023	RFA

Previous Editions Obsolete

APPLICANT:
YM & YH DEVELOPERS LLC
1156 59TH STREET
BROOKLYN, NY 11219

JMC Planning, Engineering, Landscape Architecture & Land Surveying, PLLC
JMC Site Development Consultants, LLC
John Meyer Consulting, Inc.
120 BEDFORD ROAD • ARMONK, NY 10504
voice 914.273.5225 • fax 914.273.2102
www.jmcpllc.com

JMC

CONSTRUCTION DETAILS (SITE ENTRANCE)
FARRELL INDUSTRIAL PARK
ROUTE 300
TOWN OF NEWBURGH, NY

ANY ALTERATION OF PLANS, SPECIFICATIONS, PLATS AND REPORTS BEARING THE SEAL OF A LICENSED PROFESSIONAL ENGINEER OR LICENSED LAND SURVEYOR IS A VIOLATION OF SECTION 7209 OF THE NEW YORK STATE EDUCATION LAW, EXCEPT AS PROVIDED FOR BY SECTION 7209, SUBSECTION 2.

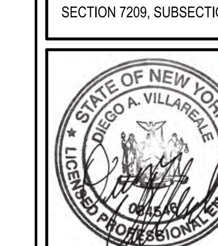

Drawn: TC	Approved: DL/JS
Scale:	NOT TO SCALE
Date:	04/19/2023
Project No:	22127
22127-DETAILS	C-907
Drawing No:	C-907

COPYRIGHT © 2021 by JMC All Rights Reserved. No part of this document may be reproduced, stored in a retrieval system, or transmitted in any form or by means, electronic, mechanical, photocopying, recording or otherwise, without the prior written permission of JMC PLANNING, ENGINEERING, LANDSCAPE ARCHITECTURE & LAND SURVEYING, PLLC | JMC SITE DEVELOPMENT CONSULTANTS, LLC | JOHN MEYER CONSULTING, INC. (JMC). Any modifications or alterations to this document without the written permission of JMC shall render them invalid and unusable.
NOT FOR CONSTRUCTION

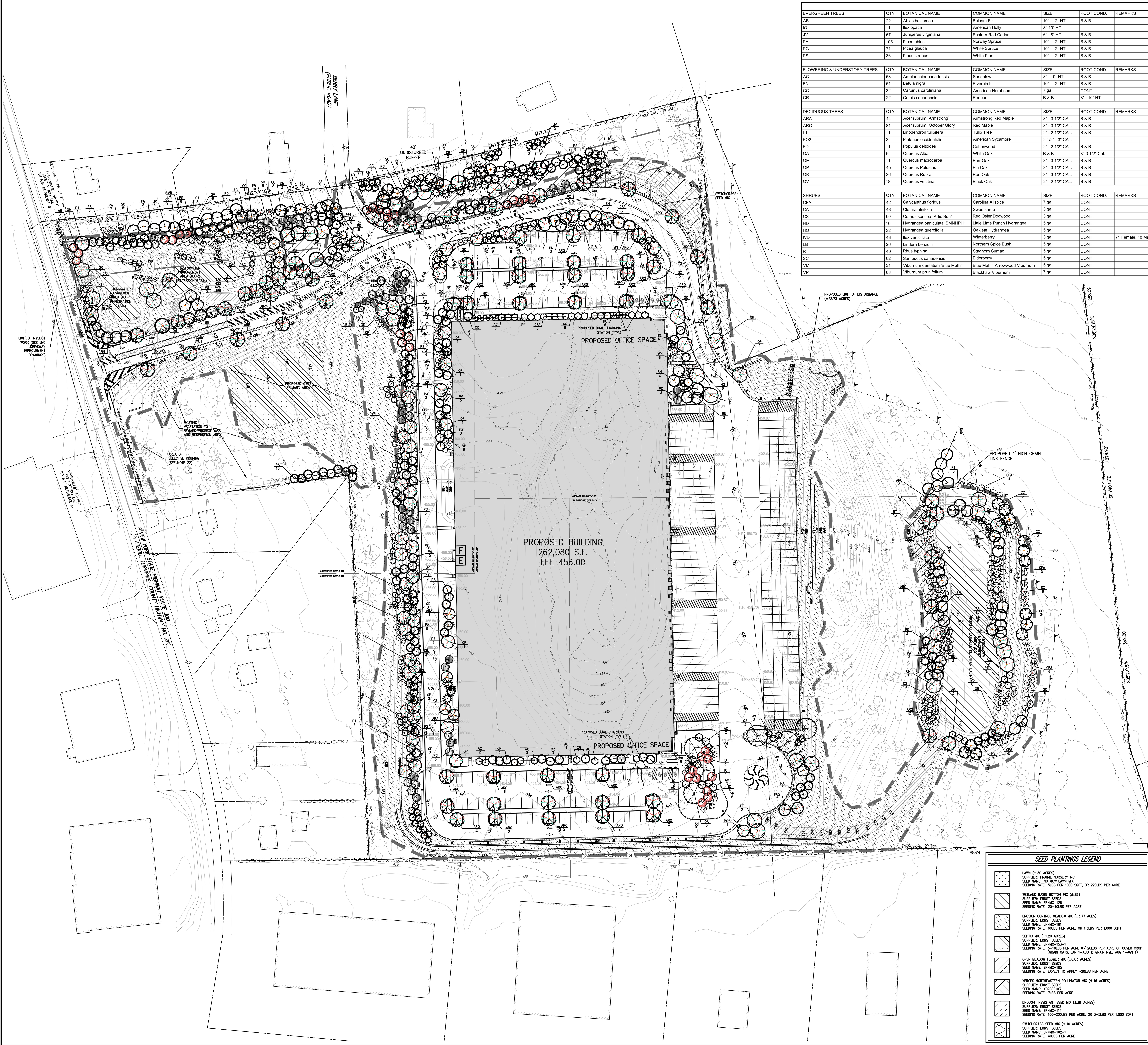

EVERGREEN TREES	QTY	BOTANICAL NAME	COMMON NAME	SIZE	ROOT COND.	REMARKS
AB	22	Abies balsamea	Balsam Fir	10` - 12` HT	B & B	
IO	11	Ilex opaca	American Holly	8`-10` HT		
JV	67	Juniperus virginiana	Eastern Red Cedar	6` - 8` HT.	B & B	
PA	105	Picea abies	Norway Spruce	10` - 12` HT	B & B	
PG	71	Picea glauca	White Spruce	10` - 12` HT	B & B	
PS	86	Pinus strobus	White Pine	10` - 12` HT	B & B	
FLOWERING & UNDERSTORY TREES	QTY	BOTANICAL NAME	COMMON NAME	SIZE	ROOT COND.	REMARKS
AC	58	Amelanchier canadensis	Shadblow	8` - 10` HT.	B & B	
BN	51	Betula nigra	Riverbirch	10` - 12` HT	B & B	
CC	32	Carpinus caroliniana	American Hornbeam	7 gal	CONT.	
CR	22	Cercis canadensis	Redbud	B & B	8` - 10` HT	
DECIDUOUS TREES	QTY	BOTANICAL NAME	COMMON NAME	SIZE	ROOT COND.	REMARKS
ARA	44	Acer rubrum `Armstrong`	Armstrong Red Maple	3" - 3 1/2" CAL.	B & B	
ARO	81	Acer rubrum `October Glory`	Red Maple	3" - 3 1/2" CAL.	B & B	
LT	11	Liriodendron tulipifera	Tulip Tree	2" - 2 1/2" CAL.	B & B	
PO2	3	Platanus occidentalis	American Sycamore	2 1/2" - 3" CAL.		
PD	11	Populus deltoides	Cottonwood	2" - 2 1/2" CAL.	B & B	
QA	6	Quercus Alba	White Oak	B & B	3"-3 1/2" Cal.	
QM	11	Quercus macrocarpa	Burr Oak	3" - 3 1/2" CAL.	B & B	
QP	45	Quercus Palustris	Pin Oak	3" - 3 1/2" CAL.	B & B	
QR	26	Quercus Rubra	Red Oak	3" - 3 1/2" CAL.	B & B	
QV	18	Quercus velutina	Black Oak	2" - 2 1/2" CAL.	B & B	
SHRUBS	QTY	BOTANICAL NAME	COMMON NAME	SIZE	ROOT COND.	REMARKS
CFA	42	Calycanthus floridus	Carolina Allspice	7 gal	CONT.	
CA	48	Clethra alnifolia	Sweetshrub	3 gal	CONT.	
CS	60	Cornus sericea `Artic Sun`	Red Osier Dogwood	3 gal	CONT.	
HD	16	Hydrangea paniculata 'SMNHPH'	Little Lime Punch Hydrangea	5 gal	CONT.	
HQ	32	Hydrangea quercifolia	Oakleaf Hydrangea	5 gal	CONT.	
IVD	43	Ilex verticillata	Winterberry	3 gal	CONT.	71 Female, 18 Male
LB	26	Lindera benzoin	Northern Spice Bush	5 gal	CONT.	
RT	40	Rhus typhina	Staghorn Sumac	5 gal	CONT.	
SC	62	Sambucus canadensis	Elderberry	5 gal	CONT.	
VM	31	Viburnum dentatum 'Blue Muffin'	Blue Muffin Arrowwood Viburnum	5 gal	CONT.	
VP	68	Viburnum prunifolium	Blackhaw Viburnum	7 gal	CONT.	

LEGEND

- EXISTING PROPERTY LINE
- ADJACENT PROPERTY LINE
- EXISTING SETBACK LINE
- EXISTING WETLAND LINE AND DELINEATION
- EXISTING WETLAND BUFFER
- EXISTING BUILDING OVERHANG
- EXISTING BUILDING LINE
- EXISTING PAVEMENT EDGE
- EXISTING CURB LINE
- EXISTING STONE WALL
- EXISTING RETAINING WALL
- EXISTING GUIDE RAIL
- EXISTING FENCE
- EXISTING TREE AND DESIGNATION
- EXISTING TREE LINE
- EXISTING UTILITY POLE
- EXISTING LIGHT POLE
- EXISTING SIGN
- PROPOSED BUILDING LINE
- PROPOSED CONCRETE CURB
- PROPOSED SAWCUT LINE
- PROPOSED CONCRETE APRON
- PROPOSED MULCH TRAIL
- PROPOSED RETAINING WALL (DESIGN BY OTHERS)
- PROPOSED FENCE
- PROPOSED DOUBLE ARM LIGHTING STANDARD (DESIGN BY OTHERS)
- PROPOSED SINGLE ARM LIGHTING STANDARD (DESIGN BY OTHERS)
- 2-4" WIDE YELLOW LINES 8"O.C.
- 12" WIDE WHITE STOP LINE
- TRAFFIC SIGN LOCATION & DESIGNATION
- PROPOSED DECIDUOUS TREE
- PROPOSED FLOWERING TREE
- PROPOSED EVERGREEN TREE
- PROPOSED SHRUBS/PERENNIALS
- PROPOSED SHRUB MASSING
- PROPOSED TREE LINE
- EXISTING FEATURE TO BE REMOVED

NOTES:

1. ALL PLANT MATERIAL SPECIFIED ON THE DRAWINGS SHALL BE FIRST QUALITY NURSERY GROWN STOCK, CERTIFIED TRUE TO THEIR GENUS, SPECIES AND VARIETY, ALL OF WHICH SHALL CONFORM TO THE "AMERICAN STANDARD FOR NURSERY STOCK PUBLISHED BY AMERICANHORTI (ANSI Z60.1)," LATEST EDITION.
2. ALL AREAS OF THE SITE NOT OCCUPIED BY BUILDING, PAVEMENT, OR OTHER IMPERVIOUS SURFACE, AND NOT SPECIFIED AS BEING PLANTED WITH TREES, SHRUBS OR GROUND COVER, SHALL BE LAWN.
3. ALL MULCH TO BE PLACED IN PLANTING BEDS SHALL BE CLEAN, NON-DYED, TOXIC FREE, ORGANIC MATERIAL, CONSISTING OF SHREDDED HARDWOOD, ROOT MULCH SHREDDED CEDAR, OR BARK CHIPS, AS APPROVED BY THE OWNERS FIELD REPRESENTATIVE OR PROJECT LANDSCAPE ARCHITECT. THE PLACEMENT THICKNESS OF THE MULCH SHALL BE 3" AND/OR AS DIRECTED IN THE PLANTING DETAILS.
4. PLANT MATERIAL SUBSTITUTIONS SHALL NOT BE PERMITTED WITHOUT THE PROJECT LANDSCAPE ARCHITECTS WRITTEN APPROVAL.
5. ALL LANDSCAPE PLANTINGS SHALL BE MAINTAINED IN A HEALTHY GROWING CONDITION THROUGHOUT THE DURATION OF THE PROJECT. ANY PLANTING NOT SO MAINTAINED SHALL BE REPLACED WITH NEW PLANT(S) AT THE BEGINNING OF THE NEXT, IMMEDIATELY FOLLOWING PLANTING SEASON.
6. ALL PLANT MATERIAL SHALL BE SUBJECT TO THE APPROVAL OF THE PROJECT LANDSCAPE ARCHITECT AND GOVERNMENTAL AUTHORITIES HAVING JURISDICTION.
7. ALL PLANT MATERIAL STOCK SHALL BE WELL-BRANCHED AND WELL-FORMED, SOUND, VIGOROUS, HEALTHY, FREE FROM DISEASE, SUN-SCALE, WINDBURN, ABRASION, AND HARMFUL INSECTS OR INSECTS EGGS; AND SHALL HAVE HEALTHY, NORMAL UNBROKEN ROOT SYSTEMS. DECIDUOUS TREES AND SHRUBS SHALL BE SYMMETRICALLY DEVELOPED, OF UNIFORM HABIT OF GROWTH, WITH STRAIGHT TRUNKS OR STEMS, AND FREE FROM OBJECTIONABLE DISFIGUREMENTS. EVERGREEN TREES AND SHRUBS SHALL HAVE WELL-DEVELOPED SYMMETRICAL TOPS WITH TYPICAL SPREAD OF BRANCHES FOR EACH PARTICULAR SPECIES OR VARIETY. ONLY VINES AND GROUND COVER PLANTS WELL ESTABLISHED IN REMOVAL CONTAINERS, INTEGRAL CONTAINERS, OR FORMED HOMOGENEOUS SOIL SECTIONS SHALL BE USED.
8. PLANTS SHALL BE GROWN UNDER CLIMATIC CONDITIONS SIMILAR TO THOSE IN THE LOCALITY OF THE PROJECT. SOURCES OF ALL PLANT MATERIAL SHALL BE DISCLOSED TO PROJECT LANDSCAPE ARCHITECT AND OWNER PRIOR TO DELIVERY.
9. ALL PLANT MATERIAL SHALL BE BALLED AND BURLAPPED OR CONTAINER GROWN STOCK, AS SPECIFIED IN THE PLANT LIST. BAREROOT STOCK OF ANY KIND IS UNACCEPTABLE UNLESS SPECIFIED.
10. ALL LAWN/MEADOW AREAS (SOD OR SEED) SHALL RECEIVE A MINIMUM 6" THICK LAYER OF SCREENED TOPSOIL PRIOR TO INSTALLATION OF SOD OR SEED, UNLESS OTHERWISE SPECIFIED. TOPSOIL SHALL CONFORM TO THE PROJECT SPECIFICATIONS.
11. SOIL WITHIN ALL PLANTING BEDS SHALL BE PREPARED AS DIRECTED IN THE PLANTING DETAILS AND PROJECT SPECIFICATIONS PRIOR TO INSTALLATION OF PLANT MATERIALS.
12. THE CONTRACTOR SHALL BE RESPONSIBLE FOR MAINTAINING ALL PLANT MATERIAL IN GOOD HEALTH UNTIL THE PROJECT LANDSCAPE ARCHITECT HAS PROVIDED WRITTEN ACCEPTANCE THAT THE PLANTINGS ARE COMPLETE AND IN CONFORMANCE WITH THE PLANS. THE CONTRACTOR SHALL GUARANTEE THE SURVIVAL OF THE PLANT MATERIAL FOR A PERIOD OF TWO YEAR AFTER ACCEPTANCE BY THE PROJECT LANDSCAPE ARCHITECT, UNLESS OTHERWISE AGREED TO WITH THE OWNER. ALL PLANT MATERIAL SHALL BE INSPECTED BY THE PROJECT LANDSCAPE ARCHITECT AFTER THE INITIAL PLANTING, AS WELL AS AT THE BEGINNING OF THE TWO GROWING SEASONS FOLLOWING THE INITIAL PLANTING. ANY PLANT MATERIAL REQUIRED TO BE REPLACED SHALL BE REPLACED AT THE SAME SIZE AND SPECIES AS SPECIFIED ON THE PLANT LIST PROVIDED HERE ON.
13. ALL AREAS DISTURBED OR DAMAGED DURING THE COURSE OF THE CONTRACTORS WORK SHALL BE REPAIRED OR RESTORED TO ORIGINAL OR CONSTRUCTED CONDITION AT NO ADDITIONAL COST TO OWNER.
14. FINAL LOCATION OF ALL PLANT MATERIALS SHALL BE SUBJECT TO APPROVAL BY PROJECT LANDSCAPE ARCHITECT. PROJECT LANDSCAPE ARCHITECT MAY ADJUST SPACING AND LOCATION IN FIELD PRIOR TO OR AFTER PLANTING.
15. CONTRACTOR SHALL IMMEDIATELY REPORT ANY UNSATISFACTORY SITE CONDITIONS TO THE OWNER IN WRITING. CONTRACTOR SHALL RECEIVE NO ADDITIONAL PAYMENT FOR ADDITIONAL WORK ASSOCIATED WITH THE UNSATISFACTORY CONDITIONS IF NOT PROPERLY REPORTED AND WITHOUT PRIOR WRITTEN APPROVAL OF THE OWNER.
16. ALL TREE AND SHRUB PLANTINGS INSTALLED ADJACENT TO PARKING AREAS SHALL BE SETBACK A MINIMUM OF 24" FROM EDGE OF THE PLANT TO EDGE OF PARKING AREA.
17. ALL PLANTINGS ADJACENT TO LAWN AREAS SHALL HAVE A 6" DEEP VERTICAL CUT EDGE ALONG THE OUTSIDE OF THE PLANTING BED.
18. THE CONTRACTOR IS INFORMED THAT ALL SOILS (SUBSOILS AND TOPSOIL) TO BE USED ON SITE SHALL BE SUBJECT TO TESTING BY AN INDEPENDENT LAB PRIOR TO BEING DISTRIBUTED ACROSS THE SITE FOR COMPLIANCE WITH THE SPECIFICATIONS PROVIDED HEREON AND/OR TECHNICAL SPECIFICATIONS. SPECIAL ATTENTION SHALL BE GIVEN TO THE TOPSOIL, AS IT IS CRITICAL TO THE SURVIVAL/HEALTH OF THE PROPOSED PLANT MATERIAL. TEST RESULTS SHALL BE PROVIDED TO THE PROJECT LANDSCAPE ARCHITECT AND TOWN LANDSCAPE ARCHITECT FOR THEIR REVIEW/APPROVAL. CONTRACTOR SHALL AMEND THE SUBSOIL AND/OR TOPSOIL TO MEET THE SPECIFICATIONS AS REQUIRED AT NO ADDITIONAL COST TO THE OWNER. CONTRACTOR SHALL COORDINATE WITH THE TOWN AND PROJECT LANDSCAPE ARCHITECTS FOR INSPECTION OF THE SUBGRADE AND TOPSOIL PRIOR TO THE START OF PLANTING.
19. THE CONTRACTOR IS INFORMED THAT THE PLAN MATERIAL IS SUBJECT TO THE INSPECTION OF THE PROJECT LANDSCAPE ARCHITECT PRIOR TO INSTALLATION FOR CONFIRMATION THAT SAID MATERIAL MEETS THE SIZE AND SPECIES SPECIFICATIONS NOTED HEREON. THIS INSPECTION MAY TAKE PLACE ON SITE OR AT THE NURSERY (SUBJECT TO APPROVAL OF THE OWNER). THE CONTRACTOR SHALL PROVIDE REPLACEMENTS FOR ANY MATERIAL REJECTED BY THE PROJECT LANDSCAPE ARCHITECT AT NO COST TO THE OWNER.
20. THE CONTRACTOR IS INFORMED THAT, IF REQUIRED BY THE BUILDING CODE OFFICIAL, ALL LANDSCAPE PLANTINGS SHALL BE SUBJECT TO INSPECTION AND ACCEPTANCE OF THE TOWN LANDSCAPE ARCHITECT PRIOR TO CERTIFICATE OF OCCUPANCY.
21. THE CONTRACTOR IS INFORMED THAT A LANDSCAPE BOND IS REQUIRED IN ACCORDANCE WITH THE RESOLUTION OF SITE PLAN APPROVAL IN AN AMOUNT DETERMINED BY THE TOWN LANDSCAPE ARCHITECT. UPON COMPLETION OF INSTALLATION, PLANTINGS SHALL BE INSPECTED AND ACCEPTED BY THE TOWN LANDSCAPE ARCHITECT. ONE YEAR AFTER THE ACCEPTANCE, A PARTIAL RELEASE OF THE LANDSCAPE BOND MAY BE REQUESTED AND TWO YEARS AFTER THE ACCEPTANCE, A FULL RELEASE OF THE LANDSCAPE BOND MAY BE REQUESTED. APPROVAL OF EITHER REQUEST WILL BE RECOMMENDED BY THE TOWN LANDSCAPE ARCHITECT IF MORE THAN 90% OF THE PLANT MATERIAL, INCLUDING GROUND COVERS, ARE IN GOOD HEALTH AT THE TIME OF INSPECTION. SHOULD IT BE DETERMINED THAT MORE THAN 10% OF THE PLANT MATERIAL IS IN POOR HEALTH, SAID PLANT MATERIAL SHALL BE REPLACED BY THE CONTRACTOR AT NO COST TO THE OWNER AND THE NEWLY INSTALLED PLANT MATERIAL SHALL LIVER FOR ONE YEAR AFTER INSTALLATION BEFORE THE LANDSCAPE BOND CAN BE RECOMMENDED FOR RELEASE.
22. THE CONTRACTOR IS INFORMED THAT THE SELECTIVE PRUNING AND/OR TREE REMOVAL IN THE AREA SHOWN HEREON IS INTENDED TO PROVIDE VISIBILITY OF THE PROPOSED MONUMENT SIGN AND SHALL BE DONE UNDER THE DIRECTION OF THE PROJECT LANDSCAPE ARCHITECT, TOWN LANDSCAPE ARCHITECT, AND/OR BUILDING CODE OFFICIAL.

SEED PLANTINGS LEGEND

LAWN (±.30 ACRES)
SUPPLIER: PRAIRIE NURSERY INC.
SEED NAME: NO MOW LAWN MIX
SEEDING RATE: 5LBS PER 1000 SQFT, OR 220LBS PER ACRE

WETLAND BASIN BOTTOM MIX (±.86)
SUPPLIER: ERNST SEEDS
SEED NAME: ERNMX-126
SEEDING RATE: 20-40LBS PER ACRE

EROSION CONTROL MEADOW MIX (±3.77 ACES)
SUPPLIER: ERNST SEEDS
SEED NAME: ERNMX-181
SEEDING RATE: 60LBS PER ACRE, OR 1.5LBS PER 1,000 SQFT

SEPTIC MIX (±1.20 ACRES)
SUPPLIER: ERNST SEEDS
SEED NAME: ERNMX-153-1
SEEDING RATE: 5-10LBS PER ACRE W/ 20LBS PER ACRE OF COVER CROP (GRAIN OATS, JAN 1-AUG 1; GRAIN RYE, AUG 1-JAN 1)

OPEN MEADOW FLOWER MIX (±0.83 ACRES)
SUPPLIER: ERNST SEEDS
SEED NAME: ERNMX-105
SEEDING RATE: EXPECT TO APPLY ~20LBS PER ACRE

XERCES NORTHEASTERN POLLINATOR MIX (±.16 ACRES)
SUPPLIER: ERNST SEEDS
SEED NAME: XERC00103
SEEDING RATE: 7LBS PER ACRE

DROUGHT RESISTANT SEED MIX (±.81 ACRES)
SUPPLIER: ERNST SEEDS
SEED NAME: ERNMX-114
SEEDING RATE: 100-200LBS PER ACRE, OR 3-5LBS PER 1,000 SQFT

SWITCHGRASS SEED MIX (±.10 ACRES)
SUPPLIER: ERNST SEEDS
SEED NAME: ERNMX-102-1
SEEDING RATE: 40LBS PER ACRE

GRAPHIC SCALE
50 0 25 50 100 200
(IN FEET)
1 inch = 50 ft.

No.	Revision	Date	By
1.	REVISED PER PLANNING BOARD COMMENTS	06/19/2023	RFA

Previous Editions Obsolete

APPLICANT:
YM & YH DEVELOPERS LLC
1156 59TH STREET
BROOKLYN, NY 11219

JMC Planning, Engineering, Landscape Architecture & Land Surveying, PLLC
JMC Site Development Consultants, LLC
John Meyer Consulting, Inc.
120 BEDFORD ROAD • ARMONK, NY 10504
voice 914.273.5225 • fax 914.273.2102
www.jmcpllc.com

LANDSCAPE PLAN

FARRELL INDUSTRIAL PARK
ROUTE 300
TOWN OF NEWBURGH, NY

ANY ALTERATION OF PLANS, SPECIFICATIONS, PLATS AND REPORTS BEARING THE SEAL OF A LICENSED PROFESSIONAL ENGINEER OR LICENSED LAND SURVEYOR IS A VIOLATION OF SECTION 7209 OF THE NEW YORK STATE EDUCATION LAW, EXCEPT AS PROVIDED FOR BY SECTION 7209, SUBSECTION 2.

STATE OF NEW YORK · DIEGO A. VILLAREALE · LICENSED PROFESSIONAL ENGINEER

Drawn: TC	Approved: DL/JS	
Scale: 1" = 50'		
Date: 04/19/2023		
Project No: 22127		
22127-LAND	LAND	LAND.scr
Drawing No: L-100		

COPYRIGHT © 2021 by JMC All Rights Reserved. No part of this document may be reproduced, stored in a retrieval system, or transmitted in any form or by means, electronic, mechanical, photocopying, recording or otherwise, without the prior written permission of JMC PLANNING, ENGINEERING, LANDSCAPE ARCHITECTURE & LAND SURVEYING, PLLC | JMC SITE DEVELOPMENT CONSULTANTS, LLC | JOHN MEYER CONSULTING, INC. (JMC). Any modifications or alterations to this document without the written permission of JMC shall render them invalid and unusable.

NOT FOR CONSTRUCTION