CONSULTING ENGINEERS, D.P.C.

MICHAEL J. LAMOREAUX, P.E. (NY, NJ, PA, VT, VA & CT)
MICHAEL W. WEEKS, P.E. (NY, NJ & PA)
LYLE R. SHUTE, P.E., LEED-AP (NY, NJ, PA)
PATRICK J. HINES

Main Office
33 Airport Center Drive
Suite 202
New Windsor, New York 12553

(845) 567-3100
fax: (845) 567-3232
e-mail: mheny@mhepc.com

Principal Emeritus:
RICHARD D. McGOEY, P.E. (NY & PA)

TOWN OF NEWBURGH
PLANNING BOARD
TECHNICAL REVIEW COMMENTS

PROJECT: FARRELL INDUSTRIAL PARK
PROJECT NO.: 20-16
PROJECT LOCATION: SECTION 1, BLOCK 1, LOT 63.23
REVIEW DATE: 12 FEBRUARY 2021
MEETING DATE: 18 FEBRUARY 2021
PROJECT REPRESENTATIVE: JMC ENGINEERING/JOSEPH P. MCDAFFERI

1. The Planning Board circulated its Notice of Intent for Lead Agency on 26 January 2021. The time frame for Lead Agency determination will not have been lapsed by the 18 February 2021 Planning Board meeting.

2. The Town Board is working with other projects in the vicinity of this project to evaluate fair share cost contributions to potential improvements at the Gardnertown Road/Route 300 intersection. Coordination between this project's Traffic Consultant and the NYSDOT as well as the Planning Board are required.

3. The previously proposed emergency access drive has been removed from the latest set of plans. Comments from the Town's Code Department as well as Jurisdictional Fire Departments should be received regarding the single point of access to a facility of this size.

4. The intent of previous comment #12 was to identify if blasting for the proposed project will be required.

5. The project will require approval for the subsurface sanitary sewer disposal system from the NYSDEC and Orange County Health Department.

6. The Applicants have provided further information regarding the Berry Lane right-of-way which extends through the site. It is unclear if the right-of-way is in favor of any entity. It is requested the Applicant consult with the Planning Board Attorney regarding the existence of the right-of-way and any impacts on the project.

7. Potable water and fire service water to the structures must be designed in such a manner that if fire flow water is terminated, potable water to the structure is similarly terminated. Separate

fire and potable water lines are currently proposed entering the buildings.

8. A response from OPHRP has been received requesting additional information regarding cultural resources. The Applicants have retained the services of a cultural resources expert. Copies of this report should be submitted to the Planning Board for the SEQRA record.

9. Previous comment #23 identified a fairly large survey "gore" on the northeast portion of the project. The Applicants response states additional information will be provided.

10. The Applicants representative have identified that the proposed office portion of the warehouse had been noted as approximate, with the maximum area not to exceed 15% or the overall warehouse square footage. Currently the two story offices are identified at 18,500 and 10,500 square feet for buildings A & B respectively.

11. Note #25 on Sheet C-310 should identify the submission of a stamped As-Built plans for the subsurface sanitary sewer disposal system be provided to Code Enforcement in addition to the required certification.

12. Stormwater Pollution Prevention Plan comments will be sent under separate cover.

13. Standard Town of Newburgh water and sewer notes must be added to the plans.

14. The Applicants are requested to confirm that the Grading Plan for the site is a balanced Grading Plan or identify the amount of cut and fill material to be brought into or removed from the site.

Respectfully submitted,

McGoey, Hauser and Edsall
Consulting Engineers, D.P.C.

Patrick J. Hines
Principal

PJH/kbw

Farrell Industrial Park
Route 300
Town of Newburgh, NY
JMC Project 18156
Town of Newburgh Project No. 2020-16

Project Narrative
December 3, 2020
Revised: December 21, 2020

The subject property is located on the east side of Route 300, just north east of the Route 300 and Little Brook Lane (private road) intersection, or opposite The Storage Stop self-storage facility. In addition to having frontage on NYS Route 300, the property can be accessed via an existing driveway from Berry Lane along the northerly property line. The property presently consists of an abandoned 2-story wood frame dwelling, remnants of a wood frame shed, and some pathways, but us otherwise undeveloped. To the best of our knowledge, the property does not have a street address, but is identified by the Town of Newburgh Tax Designation of Section 34, Block 2, Lot 45. It is within the IB Interchange Business Zoning District and abuts the R1 Single Family Residence Zoning District to the north.

Farrell Building Company is proposing to construct an Industrial Park development on the property which would consist of two warehouse buildings totaling 290,000 SF (Building A will be 185,000 SF and Building B will be 105,000 SF) and the associated site improvements. The site improvements will include but not be limited to a site access drive from Route 300, an emergency access drive from Berry Lane (gated at the property line and site access drive), 251 parking spaces, 72 loading spaces, 40 truck/trailer parking spaces, stormwater management systems, a private watermain extension, a septic system, landscaping, and lighting.

The onsite wetlands were determined to be under the jurisdiction of the Army Corps of Engineers (USACE) and delineated accordingly by Ecological Solutions, LLC on March 26, 2019. The delineation was followed by the preparation of a "Wetland Delineation Report", also prepared by Ecological Solutions, LLC, and dated September 21, 2020. The USACE does not have a buffer requirement. These wetlands were mapped by the project surveyor and are shown on the site plans for information and reference. There is no wetland disturbance proposed as part of this project.

Municipal water is available to the site via a 16" watermain in Route 300, which will be tapped for domestic and fire service. The service will be considered a private watermain extension and subject to the review/approval of the Orange County Department of Health. Municipal sewer is not available to the site. Therefore, construction of a septic system will be required to serve the project. The design of this system will also be subject to the review/approval of the Orange County Department of Health.

Since the end user of the site has yet to be determined and many design/operational aspects of the project are based upon the number of employees, the number of employees were determined based upon publications by the Energy Star division of the United Stated Department of Environmental Protection (EPA) entitled "Warehouse Space Use Information", "Warehouse Data Trends", and "Distribution Center Data Trends". These publications are prepared based upon data from actual warehouse and distribution center operators that is input to the EPA's Energy Star Portfolio Manager – an online tool to measure and track energy and water usage. These publications provide information regarding the occupant density for the total number of employees in a warehouse and distribution center uses, with an average at 0.5 employees/1,000 SF and a 95th percentile at 1.5 employees/1,000 SF. This project has conservatively accounted for 1 employee/1,000 SF.

As noted above, the northerly boundary of the property abuts the R1 – Single Family Residence District. Therefore, a 100-foot landscape buffer is required and has been incorporated into the design. Abutting the residential district also increases that side yard setback to 228 feet, which the project complies with.

As you are aware, the Town Code defines building height as "the vertical distance measured from the average elevation of the finished grade along the side of the structure facing the street to the highest point of such structure." Based upon this definition and when considering the proposed grades, the height of Buildings A and B are 45.8 and 48.8 feet respectively, where 40 feet is the maximum permitted. Accordingly, a variance is anticipated to be required. The actual height of both buildings from the finished floor to the top of the 3-foot parapet will be 45 feet. The 42-foot roof elevation is proposed in an effort to provide the preferred interior ceiling height of 38 feet, which is an industry standard. Building A will have some minor adjustments to the grade within the emergency access drive at both ends of the structure in order to meet grades at the truck parking area to the south and the site access drive to the north, which is the reason for the slight increase in the calculated building height (average grade is used). The increase in the height for Building B, based upon average grade along the façade facing the street, is due to the need for the grade outside the loading docks to be 4 feet below the finished floor. It is important to note the following regarding the building height:

A. The finished floor of each building is the same elevation.
B. Building A will completely screen loading docks of Building B from the street.
C. Both buildings are several hundred feet from the roadway and are tucked behind other parcels that have frontage on the street.
D. All loading docks are situated to be internal to the site and are not oriented out towards the property perimeter.

Based upon the above, both buildings will appear to be the same height when viewed from the property perimeter.

The above noted "Wetland Delineation Report" and EPA "Data Trend" publications are attached to this Narrative for information and reference.

P:\2018\18156\ADMIN\Project Narrative 12-03-2020.docx

Ecological Solutions, LLC

Connecticut
1248 Southford Road
Southbury, CT 06488
Phone (203) 910-4716
ecolsol@aol.com

September 21, 2020

Joseph Modafferri, Jr., RLA
c/o JMC
120 Bedford Road
Armonk, NY 10504

Re: Wetland Delineation
Yune Site - Route 300
Town of Newburgh, Orange County, New York

Dear Joe:

Ecological Solutions, LLC completed a wetland delineation on March 26, 2019 at the site located on Route 300 in the Town of Newburgh, Orange County, New York (*Figure 1*). The delineation was completed in accordance with the Army Corps of Engineers (USACE) Wetlands Delineation Manual (January 1987), Routine Determination Method and Northcentral/Northeast supplement. There is no New York State Department of Environmental Conservation (NYSDEC) regulated wetland at this location.

Federal wetlands were delineated based upon the identification of the three mandatory criteria for wetland determination as outlined in the 1987 Federal Manual and supplement: dominant hydrophytic vegetation, hydric soils, and evidence of wetland hydrology. The Routine Methodology procedure for wetland determination was used. Transects consisting of at several sample points were walked. Dominant vegetation around each sample point was identified and its percent cover quantified. The areas were checked in detail for the presence of wetland hydrologic indicators. Soil profiles were then observed and characterized at each point.

The detailed field investigation included:

1. Identification of vegetation species to determine whether there was a dominance of hydrophytic plants and areas containing transitional but primarily wetland-oriented species.

2. Determination of soil features for hydric (poorly and very poorly drained) natural soils.

3. Observation of site features displaying evidence of wetland hydrology based on the presence of inundated areas, apparent high seasonal water tables, and evidence of saturation within 12 inches of the surface (considered the root zone) during sufficient periods during the growing season to provide for anaerobic/hydric soil conditions.

Based on observed field conditions a federal wetland was delineated on the eastern section of the site and is regulated by the USACE as “waters of the US”. There is no regulatory buffer attached to the wetland. The wetland boundary is shown on the map entitled, "Topographic Survey of Property State Highway Route 300" prepared by JMC and dated 5/23/2019 and last revised 07/11/2019.

If you need any additional information, please contact me.

Sincerely,
ECOLOGICAL SOLUTIONS, LLC

Michael Nowicki
Biologist

Figure 1 Location Map

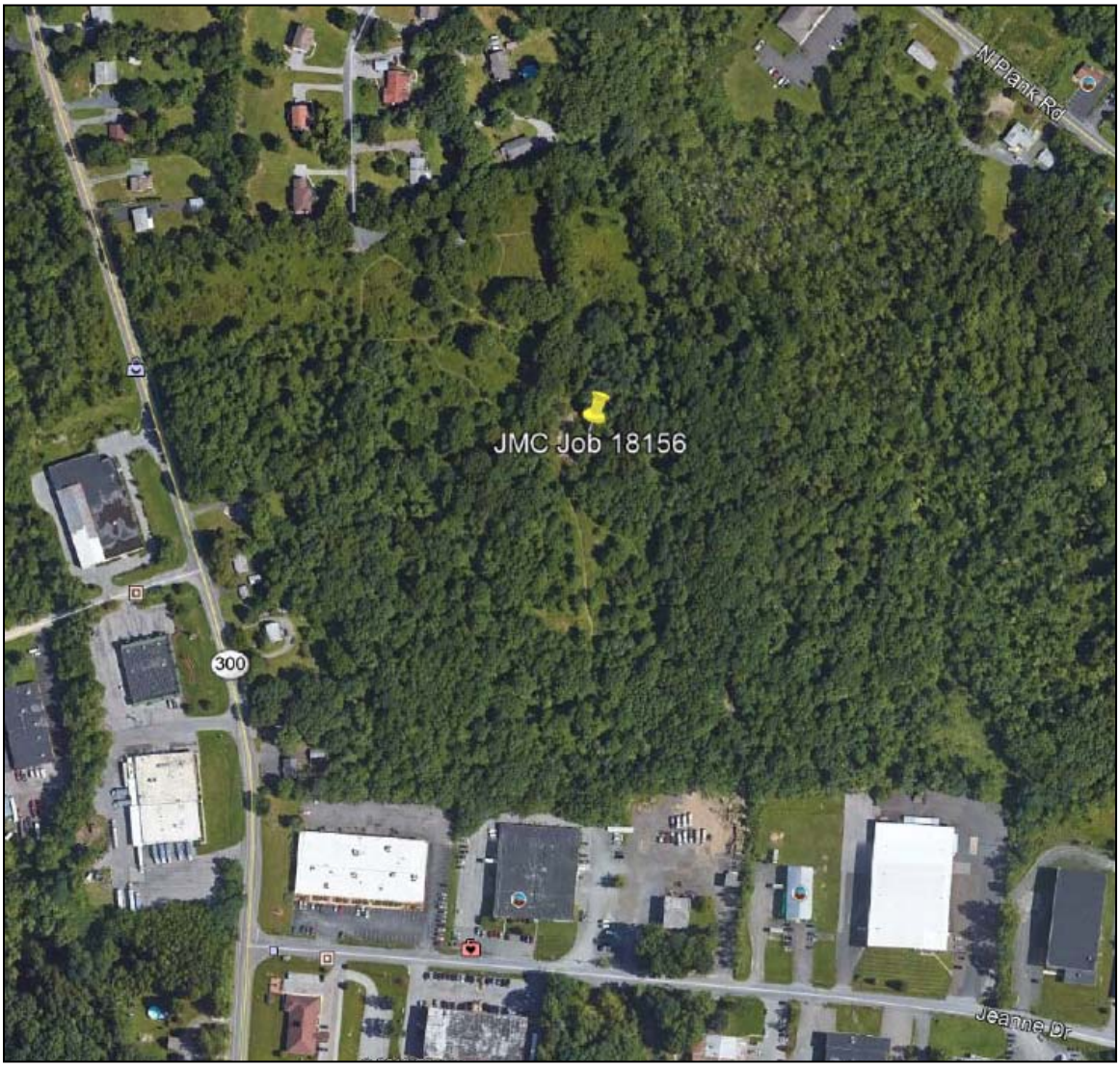

ENERGY STAR® PortfolioManager®

DataTrends

Energy Use in Non-Refrigerated Warehouses

Non-Refrigerated Warehouses Using Portfolio Manager

7,976 Properties

669 Million ft²

52 Average ENERGY STAR Score

The U.S. Environmental Protection Agency's (EPA) ENERGY STAR Portfolio Manager is changing the way organizations track and manage energy. Because of this widespread market adoption, EPA has prepared the DataTrends series to examine benchmarking and trends in energy and water consumption in Portfolio Manager. To learn more, visit www.energystar.gov/DataTrends.

Benchmarking by State

Number of Non-Refrigerated Warehouses

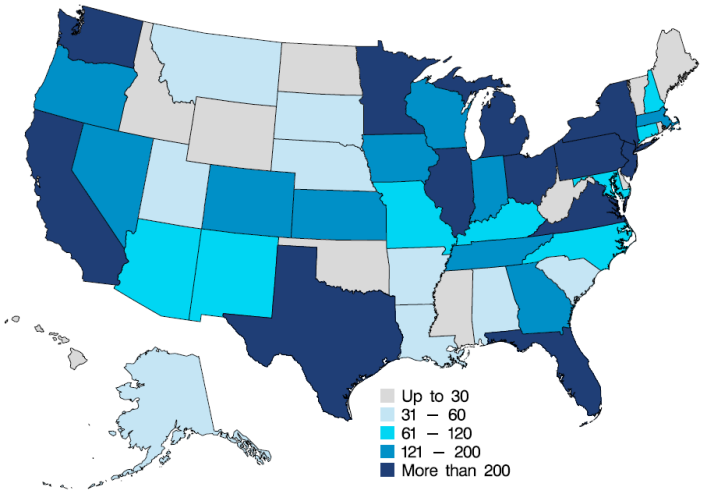

What is a typical operating profile?

Energy use intensity (EUI) ranges from less than 50 to more than 600 kBtu/ft² across all non-refrigerated warehouses, with those at the 95th percentile using nearly 21 times the energy of those at the 5th percentile. The distribution has a negative skew, which means the most energy intensive properties are further away from the median than the most efficient. Properties may use more or less energy for many reasons, including variable equipment efficiency and energy management practices, as well as variations in climate and business activities.

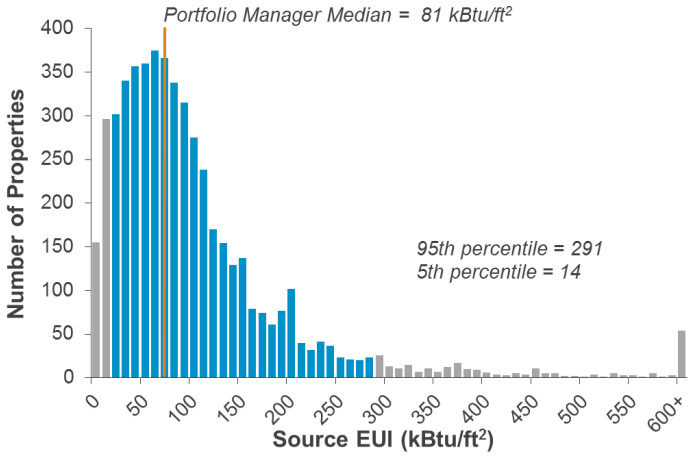

The median non-refrigerated warehouse in Portfolio Manager is approximately 36,000 square feet and operates 55 hours per week. But the typical property use patterns observed in Portfolio Manager vary just as much as energy. As you can see, there are non-refrigerated warehouses of all shapes and sizes benchmarking in Portfolio Manager.

Property Characteristic	Range of Values: 5th percentile	Median	95th percentile
Square Feet	7,245	36,316	337,740
Weekly Operating Hours	40	55	141
Workers per 1,000 ft²	0.1	0.6	1.9
Walk-in Refrigerators?		3% say yes	
Heating Degree Days	911	4,483	7,854
Cooling Degree Days	124	1,056	3,285

What is Source Energy? Source energy is the amount of raw fuel required to operate your property. In addition to what you use on site, source energy includes losses from generation, transmission, and distribution of energy. Source energy enables the most complete and equitable energy assessment. Learn more at: www.energystar.gov/SourceEnergy.

What characteristics affect energy use in non-refrigerated warehouses?

Business activity and climate are often correlated with energy consumption. For example, non-refrigerated warehouses that have more workers per square foot, operate more hours and/or experience more heating degree days (HDD) use more energy, on average. The orange trend lines in the graphs below are steeper for workers and operating hours, meaning that these characteristics have a stronger effect on energy than HDD. While these trends hold true on average, two properties with the same number of workers could have very different energy use, as shown by the range in the blue dots. Trends can also be seen for other indicators of business activity, such as number of walk-in refrigerators and cooling degree days.

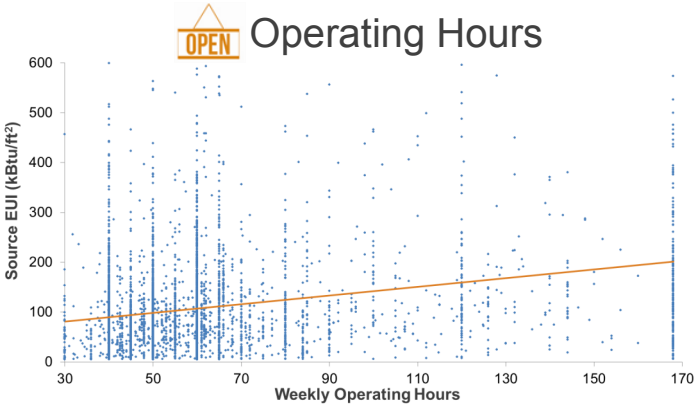

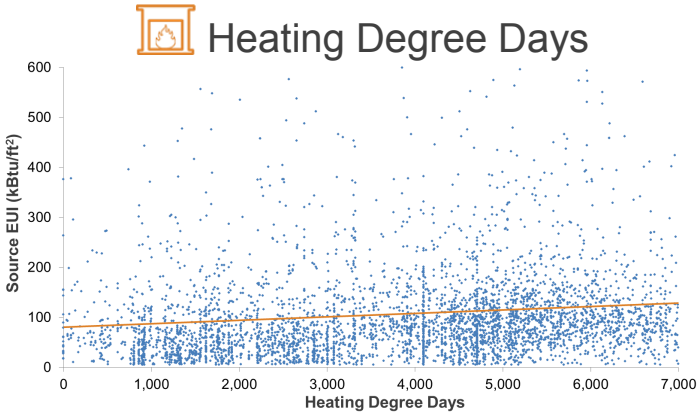

How does EPA's ENERGY STAR score vary with energy use?

EPA's ENERGY STAR score normalizes for the effects of operation. While properties with lower EUI generally earn higher scores on the 1-100 scale, an individual property's result depends on its business activities. For any given EUI, a range of scores is possible.

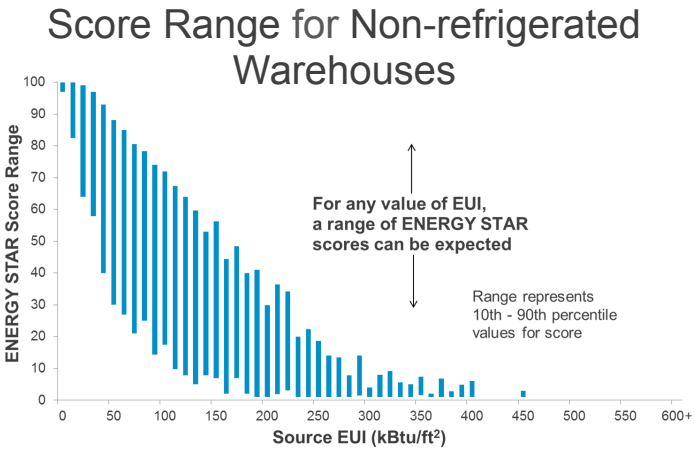

Let's look at two non-refrigerated warehouses, Warehouse A and Warehouse B. They have the same EUI of 107 kBtu per square foot, and are identical except that Warehouse B has more workers per square foot and operates for more hours per week. Because Warehouse B has more intensive activities, it is expected to have a higher EUI than Warehouse A, based on ENERGY STAR scoring models. Since Warehouse B is *expected* to use more energy, but *actually* uses the same energy, it earns a higher score.

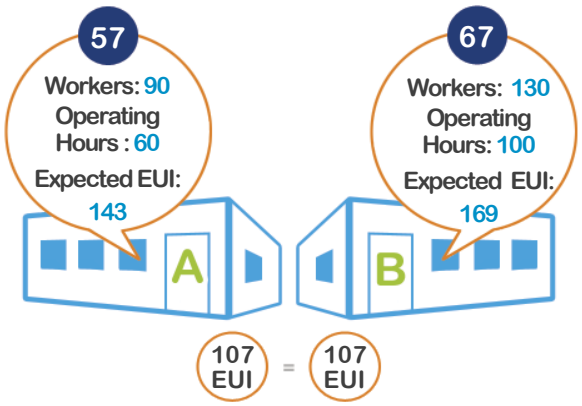

Note: *Total number and floor area of properties benchmarked reflects cumulative data through 2013. Analysis of energy use and operational characteristics includes 5,203 properties benchmarked in the most recent 5 years. Because of small sample size, refrigerated warehouses were excluded from this data sheet. The data is self reported and has been filtered to exclude outliers, incomplete records, and test facilities. Portfolio Manager is not a randomly selected sample and is not the basis of the ENERGY STAR score. To learn more, visit: www.energystar.gov/DataTrends.*

EPA United States Environmental Protection Agency

ENERGY STAR® PortfolioManager®

DataTrends

Energy Use in Distribution Centers

Distribution Centers Using Portfolio Manager

1,835 Properties

485 Million ft²

61 Average ENERGY STAR Score

The U.S. Environmental Protection Agency's (EPA) ENERGY STAR Portfolio Manager is changing the way organizations track and manage energy. Because of this widespread market adoption, EPA has prepared the DataTrends series to examine benchmarking and trends in energy and water consumption in Portfolio Manager. To learn more, visit www.energystar.gov/DataTrends.

Benchmarking by State

Number of Distribution Centers

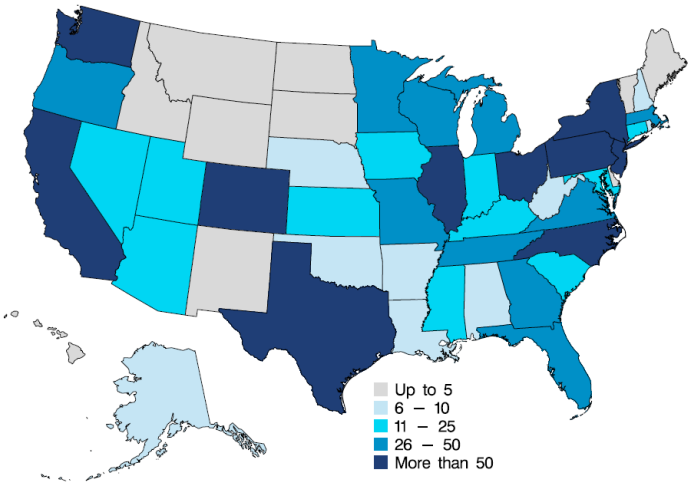

What is a typical operating profile?

Energy use intensity (EUI) ranges from less than 50 to more than 600 kBtu/ft² across all distribution centers, with those at the 95th percentile using 16 times the energy of those at the 5th percentile. The distribution has a negative skew, which means the most energy intensive properties are further away from the median than the most efficient. Properties may use more or less energy for many reasons, including variable equipment efficiency and energy management practices, as well as variations in climate and business activities.

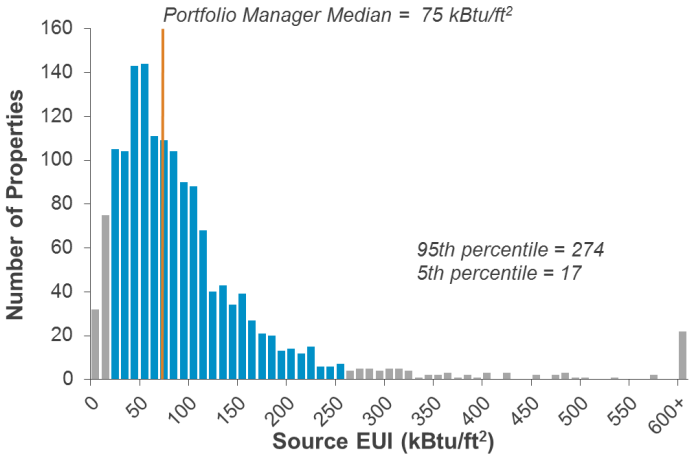

The median distribution center in Portfolio Manager is approximately 110,000 square feet and operates 60 hours per week. But the typical property use patterns observed in Portfolio Manager vary just as much as energy. As you can see, there are distribution centers of all shapes and sizes benchmarking in Portfolio Manager.

Property Characteristic	Range of Values: 5th percentile	Median	95th percentile
Square Feet	9,992	110,431	887,014
Weekly Operating Hours	40	60	168
Workers per 1,000 ft²	0.1	0.4	1.5
Walk-in Refrigerators?		9% say yes	
Heating Degree Days	864	4,401	7,162
Cooling Degree Days	171	1,136	3,208

What is Source Energy? Source energy is the amount of raw fuel required to operate your property. In addition to what you use on site, source energy includes losses from generation, transmission, and distribution of energy. Source energy enables the most complete and equitable energy assessment. Learn more at: www.energystar.gov/SourceEnergy.

What characteristics affect energy use in distribution centers?

Business activity and climate are often correlated with energy consumption. For example, distribution centers that have more workers per square foot, operate more hours and/or have more heading degree days (HDD), on average. The orange trend line in the graphs below is the steepest for workers meaning that worker density has stronger effect on energy than hours or HDD. While these trends hold true on average, two properties with the same number of workers could have very different energy use, as shown by the range in the blue dots. Trends can also be seen for other indicators of business activity, such as number of walk-in refrigerators.

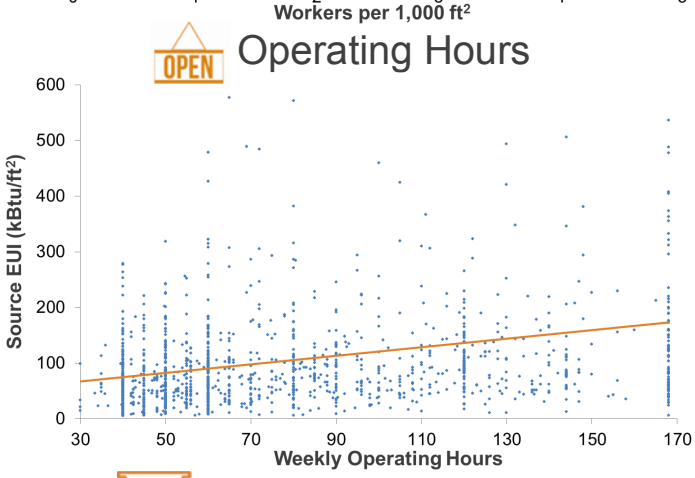

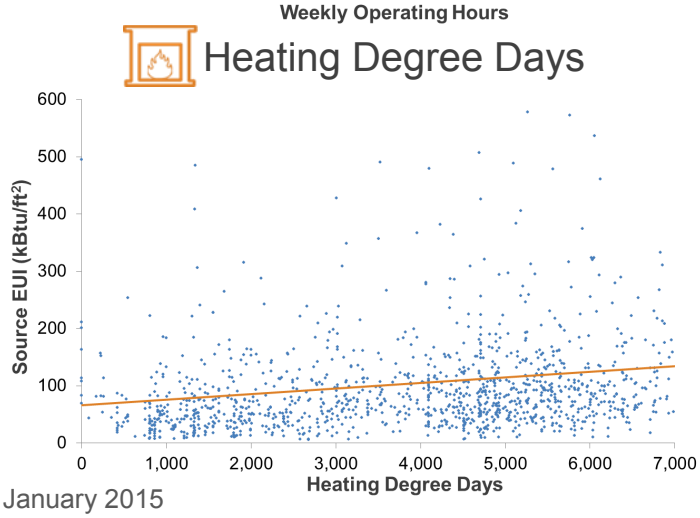

How does EPA's ENERGY STAR score vary with energy use?

EPA's ENERGY STAR score normalizes for the effects of operation. While properties with lower EUI generally earn higher scores on the 1-100 scale, an individual property's result depends on its business activities. For any given EUI, a range of scores is possible.

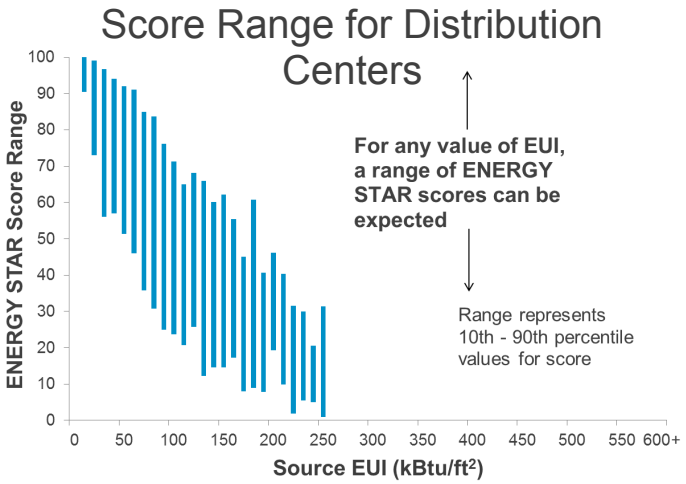

Let's look at two distribution centers, Center A and Center B. They have the same EUI of 109 kBtu per square foot, and are identical except that Center B has more workers per square foot and operates for more hours per week. Because Center B has more intensive activities, it is expected to have a higher EUI than Center A, based on ENERGY STAR scoring models. Since Center B is *expected* to use more energy, but *actually* uses the same energy, it earns a higher score.

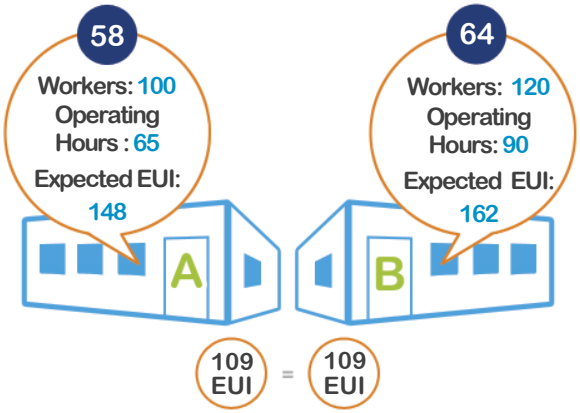

Note: *Total number and floor area of properties benchmarked reflects cumulative data through 2013. Analysis of energy use and property characteristics includes 1,554 properties benchmarked in the most recent 5 years. The data is self reported and has been filtered to exclude outliers, incomplete records, and test facilities. Portfolio Manager is not a randomly selected sample and is not the basis of the ENERGY STAR score. To learn more, visit: www.energystar.gov/DataTrends.*

EPA United States Environmental Protection Agency

Full Environmental Assessment Form
Part 1 - Project and Setting

Instructions for Completing Part 1

Part 1 is to be completed by the applicant or project sponsor. Responses become part of the application for approval or funding, are subject to public review, and may be subject to further verification.

Complete Part 1 based on information currently available. If additional research or investigation would be needed to fully respond to any item, please answer as thoroughly as possible based on current information; indicate whether missing information does not exist, or is not reasonably available to the sponsor; and, when possible, generally describe work or studies which would be necessary to update or fully develop that information.

Applicants/sponsors must complete all items in Sections A & B. In Sections C, D & E, most items contain an initial question that must be answered either "Yes" or "No". If the answer to the initial question is "Yes", complete the sub-questions that follow. If the answer to the initial question is "No", proceed to the next question. Section F allows the project sponsor to identify and attach any additional information. Section G requires the name and signature of the applicant or project sponsor to verify that the information contained in Part 1is accurate and complete.

A. Project and Applicant/Sponsor Information.

Name of Action or Project: Farrell Industrial Park		
Project Location (describe, and attach a general location map): NYS Route 300 (Plattekill Turnpike), Town of Newburgh, NY		
Brief Description of Proposed Action (include purpose or need): The Applicant proposes the construction of two warehouse buildings on the Site. One is proposed to be 185,000 square feet and the other 105,000 square feet, with a total of 290 employees. The site improvements include a single access driveway off of NY Route 300, as well as parking for cars and loading spaces for trucks. The height of the proposed buildings is 45 feet to the top of the parapet and 49 feet from the average finished grade, where a maximum of 40 feet is permitted. The project will therefore require a building height variance. See Project Narrative for further discussion.		
Name of Applicant/Sponsor: Farrell Building Company Attn. Stephen Zagoren	Telephone: 631-766-0023 E-Mail: zags1413@gmail.com	
Address: 2317 Montauk Highway		
City/PO: Bridgehampton	State: NY	Zip Code: 11932
Project Contact (if not same as sponsor; give name and title/role): JMC Planning Engineering Landscape Architecture & Land Surveying, PLLC Attn.: Joseph P. Modafferi, Jr., RLA	Telephone: 914-273-5225 E-Mail: jmodafferi@jmcpllc.com	
Address: 120 Bedford Road		
City/PO: Armonk	State: NY	Zip Code: 10504
Property Owner (if not same as sponsor): Chun S. McGlasson	Telephone: E-Mail:	
Address: 16 Anna Court		
City/PO: Carmel	State: NY	Zip Code: 10512

B. Government Approvals

B. Government Approvals, Funding, or Sponsorship. ("Funding" includes grants, loans, tax relief, and any other forms of financial assistance.)

Government Entity	If Yes: Identify Agency and Approval(s) Required	Application Date (Actual or projected)
a. City Counsel, Town Board, or Village Board of Trustees ☐Yes ☑No		
b. City, Town or Village Planning Board or Commission ☑Yes ☐No	Site Plan Approval	12/04/2020
c. City, Town or Village Zoning Board of Appeals ☑Yes ☐No	Building Height variance	01/14/2021
d. Other local agencies ☐Yes ☑No		
e. County agencies ☑Yes ☐No	Health Dept. septic system approval; private watermain ext. Orange County §239-m General Municipal Law Referral	TBD
f. Regional agencies ☐Yes ☑No		
g. State agencies ☑Yes ☐No	NYSDEC SPDES General Permit GP-0-20-001 NYSDOT Highway Work Permit	TBD
h. Federal agencies ☐Yes ☑No		

i. Coastal Resources.

i. Is the project site within a Coastal Area, or the waterfront area of a Designated Inland Waterway? ☐Yes ☑No

ii. Is the project site located in a community with an approved Local Waterfront Revitalization Program? ☐Yes ☑No

iii. Is the project site within a Coastal Erosion Hazard Area? ☐Yes ☑No

C. Planning and Zoning

C.1. Planning and zoning actions.

Will administrative or legislative adoption, or amendment of a plan, local law, ordinance, rule or regulation be the only approval(s) which must be granted to enable the proposed action to proceed? ☐Yes ☑No

- **If Yes,** complete sections C, F and G.
- **If No,** proceed to question C.2 and complete all remaining sections and questions in Part 1

C.2. Adopted land use plans.

a. Do any municipally- adopted (city, town, village or county) comprehensive land use plan(s) include the site where the proposed action would be located? ☑Yes ☐No

If Yes, does the comprehensive plan include specific recommendations for the site where the proposed action would be located? ☐Yes ☑No

b. Is the site of the proposed action within any local or regional special planning district (for example: Greenway; Brownfield Opportunity Area (BOA); designated State or Federal heritage area; watershed management plan; or other?) ☐Yes ☑No

If Yes, identify the plan(s):

c. Is the proposed action located wholly or partially within an area listed in an adopted municipal open space plan, or an adopted municipal farmland protection plan? ☐Yes ☑No

If Yes, identify the plan(s):

C.3. Zoning

a. Is the site of the proposed action located in a municipality with an adopted zoning law or ordinance. ☑ Yes ☐ No
If Yes, what is the zoning classification(s) including any applicable overlay district?
IB "Interchange Business"

b. Is the use permitted or allowed by a special or conditional use permit? ☑ Yes ☐ No

c. Is a zoning change requested as part of the proposed action? ☐ Yes ☑ No
If Yes,
i. What is the proposed new zoning for the site? _____

C.4. Existing community services.

a. In what school district is the project site located? Newburgh Central School District

b. What police or other public protection forces serve the project site?
Town of Newburgh Police Department

c. Which fire protection and emergency medical services serve the project site?
Cronomer Valley Fire District; Town of Newburgh Emergency Medical Services

d. What parks serve the project site?
Chadwick Lake Park; Cronomer Hill Park; Algonquin Park

D. Project Details

D.1. Proposed and Potential Development

a. What is the general nature of the proposed action (e.g., residential, industrial, commercial, recreational; if mixed, include all components)? Commercial, residential

b. a. Total acreage of the site of the proposed action? ±35.21 acres
b. Total acreage to be physically disturbed? ±26.81 acres
c. Total acreage (project site and any contiguous properties) owned or controlled by the applicant or project sponsor? ±35.21 acres

c. Is the proposed action an expansion of an existing project or use? ☐ Yes ☑ No
i. If Yes, what is the approximate percentage of the proposed expansion and identify the units (e.g., acres, miles, housing units, square feet)? % _____ Units: _____

d. Is the proposed action a subdivision, or does it include a subdivision? ☐ Yes ☑ No
If Yes,
i. Purpose or type of subdivision? (e.g., residential, industrial, commercial; if mixed, specify types)
ii. Is a cluster/conservation layout proposed? ☐ Yes ☐ No
iii. Number of lots proposed? _____
iv. Minimum and maximum proposed lot sizes? Minimum _____ Maximum _____

e. Will the proposed action be constructed in multiple phases? ☐ Yes ☑ No
i. If No, anticipated period of construction: 12-18 months
ii. If Yes:
- Total number of phases anticipated _____
- Anticipated commencement date of phase 1 (including demolition) _____ month _____ year
- Anticipated completion date of final phase _____ month _____ year
- Generally describe connections or relationships among phases, including any contingencies where progress of one phase may determine timing or duration of future phases: _____

f. Does the project include new residential uses? ☐ Yes ☑ No

If Yes, show numbers of units proposed.

	One Family	Two Family	Three Family	Multiple Family (four or more)
Initial Phase				
At completion of all phases				

g. Does the proposed action include new non-residential construction (including expansions)? ☑ Yes ☐ No

If Yes,

i. Total number of structures 2

ii. Dimensions (in feet) of largest proposed structure: 49 height; 250 width; and 740 length

iii. Approximate extent of building space to be heated or cooled: 279,500 square feet

h. Does the proposed action include construction or other activities that will result in the impoundment of any liquids, such as creation of a water supply, reservoir, pond, lake, waste lagoon or other storage? ☐ Yes ☑ No

If Yes,

i. Purpose of the impoundment: _____

ii. If a water impoundment, the principal source of the water: ☐ Ground water ☐ Surface water streams ☐ Other specify: _____

iii. If other than water, identify the type of impounded/contained liquids and their source. _____

iv. Approximate size of the proposed impoundment. Volume: _____ million gallons; surface area: _____ acres

v. Dimensions of the proposed dam or impounding structure: _____ height; _____ length

vi. Construction method/materials for the proposed dam or impounding structure (e.g., earth fill, rock, wood, concrete): _____

D.2. Project Operations

a. Does the proposed action include any excavation, mining, or dredging, during construction, operations, or both? (Not including general site preparation, grading or installation of utilities or foundations where all excavated materials will remain onsite) ☐ Yes ☑ No

If Yes:

i. What is the purpose of the excavation or dredging? _____

ii. How much material (including rock, earth, sediments, etc.) is proposed to be removed from the site?

- Volume (specify tons or cubic yards): _____
- Over what duration of time? _____

iii. Describe nature and characteristics of materials to be excavated or dredged, and plans to use, manage or dispose of them. _____

iv. Will there be onsite dewatering or processing of excavated materials? ☐ Yes ☐ No

If yes, describe. _____

v. What is the total area to be dredged or excavated? _____ acres

vi. What is the maximum area to be worked at any one time? _____ acres

vii. What would be the maximum depth of excavation or dredging? _____ feet

viii. Will the excavation require blasting? ☐ Yes ☐ No

ix. Summarize site reclamation goals and plan: _____

b. Would the proposed action cause or result in alteration of, increase or decrease in size of, or encroachment into any existing wetland, waterbody, shoreline, beach or adjacent area? ☐ Yes ☑ No

If Yes:

i. Identify the wetland or waterbody which would be affected (by name, water index number, wetland map number or geographic description): _____

ii. Describe how the proposed action would affect that waterbody or wetland, e.g. excavation, fill, placement of structures, or alteration of channels, banks and shorelines. Indicate extent of activities, alterations and additions in square feet or acres: _____

iii. Will the proposed action cause or result in disturbance to bottom sediments? ☐ Yes ☐ No
If Yes, describe: _____

iv. Will the proposed action cause or result in the destruction or removal of aquatic vegetation? ☐ Yes ☐ No
If Yes:

- acres of aquatic vegetation proposed to be removed: _____
- expected acreage of aquatic vegetation remaining after project completion: _____
- purpose of proposed removal (e.g. beach clearing, invasive species control, boat access): _____
- proposed method of plant removal: _____
- if chemical/herbicide treatment will be used, specify product(s): _____

v. Describe any proposed reclamation/mitigation following disturbance: _____

c. Will the proposed action use, or create a new demand for water? ☑ Yes ☐ No
If Yes:
i. Total anticipated water usage/demand per day: 3,480 gallons/day
ii. Will the proposed action obtain water from an existing public water supply? ☑ Yes ☐ No
If Yes:

- Name of district or service area: Consolidated Water #1
- Does the existing public water supply have capacity to serve the proposal? ☑ Yes ☐ No
- Is the project site in the existing district? ☑ Yes ☐ No
- Is expansion of the district needed? ☐ Yes ☑ No
- Do existing lines serve the project site? ☑ Yes ☐ No

iii. Will line extension within an existing district be necessary to supply the project? ☐ Yes ☑ No
If Yes:

- Describe extensions or capacity expansions proposed to serve this project: _____
- Source(s) of supply for the district: _____

iv. Is a new water supply district or service area proposed to be formed to serve the project site? ☐ Yes ☑ No
If, Yes:

- Applicant/sponsor for new district: _____
- Date application submitted or anticipated: _____
- Proposed source(s) of supply for new district: _____

v. If a public water supply will not be used, describe plans to provide water supply for the project: _____

vi. If water supply will be from wells (public or private), what is the maximum pumping capacity: _____ gallons/minute.

d. Will the proposed action generate liquid wastes? ☑ Yes ☐ No
If Yes:
i. Total anticipated liquid waste generation per day: 3,480 gallons/day
ii. Nature of liquid wastes to be generated (e.g., sanitary wastewater, industrial; if combination, describe all components and approximate volumes or proportions of each): Sanitary wastewater

iii. Will the proposed action use any existing public wastewater treatment facilities? ☐ Yes ☑ No
If Yes:

- Name of wastewater treatment plant to be used: _____
- Name of district: _____
- Does the existing wastewater treatment plant have capacity to serve the project? ☐ Yes ☐ No
- Is the project site in the existing district? ☐ Yes ☐ No
- Is expansion of the district needed? ☐ Yes ☐ No

- Do existing sewer lines serve the project site? ☐Yes ☑No
- Will a line extension within an existing district be necessary to serve the project? ☐Yes ☑No

  If Yes:
  - Describe extensions or capacity expansions proposed to serve this project: _____

iv. Will a new wastewater (sewage) treatment district be formed to serve the project site? ☐Yes ☑No

If Yes:
- Applicant/sponsor for new district: _____
- Date application submitted or anticipated: _____
- What is the receiving water for the wastewater discharge? _____

v. If public facilities will not be used, describe plans to provide wastewater treatment for the project, including specifying proposed receiving water (name and classification if surface discharge or describe subsurface disposal plans):

On-site subsurface septic fields.

vi. Describe any plans or designs to capture, recycle or reuse liquid waste: _____

e. Will the proposed action disturb more than one acre and create stormwater runoff, either from new point sources (i.e. ditches, pipes, swales, curbs, gutters or other concentrated flows of stormwater) or non-point source (i.e. sheet flow) during construction or post construction? ☑Yes ☐No

If Yes:

i. How much impervious surface will the project create in relation to total size of project parcel?

±686,063 Square feet or ±15.75 acres (impervious surface)

±1,533,60(Square feet or ±35.21 acres (parcel size)

ii. Describe types of new point sources. New point sources of stormwater runoff include building gutters and driveway curbing.

iii. Where will the stormwater runoff be directed (i.e. on-site stormwater management facility/structures, adjacent properties, groundwater, on-site surface water or off-site surface waters)?

Site runoff will be directed to on-site retention ponds that will control the rate of runoff to pre-developed conditions.

- If to surface waters, identify receiving water bodies or wetlands: _____
- Will stormwater runoff flow to adjacent properties? ☐Yes ☑No

iv. Does the proposed plan minimize impervious surfaces, use pervious materials or collect and re-use stormwater? ☑Yes ☐No

f. Does the proposed action include, or will it use on-site, one or more sources of air emissions, including fuel combustion, waste incineration, or other processes or operations? ☐Yes ☑No

If Yes, identify:

i. Mobile sources during project operations (e.g., heavy equipment, fleet or delivery vehicles)

ii. Stationary sources during construction (e.g., power generation, structural heating, batch plant, crushers)

iii. Stationary sources during operations (e.g., process emissions, large boilers, electric generation)

g. Will any air emission sources named in D.2.f (above), require a NY State Air Registration, Air Facility Permit, or Federal Clean Air Act Title IV or Title V Permit? ☐Yes ☑No

If Yes:

i. Is the project site located in an Air quality non-attainment area? (Area routinely or periodically fails to meet ambient air quality standards for all or some parts of the year) ☐Yes ☐No

ii. In addition to emissions as calculated in the application, the project will generate:
- _____Tons/year (short tons) of Carbon Dioxide (CO_2)
- _____Tons/year (short tons) of Nitrous Oxide (N_2O)
- _____Tons/year (short tons) of Perfluorocarbons (PFCs)
- _____Tons/year (short tons) of Sulfur Hexafluoride (SF_6)
- _____Tons/year (short tons) of Carbon Dioxide equivalent of Hydroflourocarbons (HFCs)
- _____Tons/year (short tons) of Hazardous Air Pollutants (HAPs)

h. Will the proposed action generate or emit methane (including, but not limited to, sewage treatment plants, landfills, composting facilities)? ☐Yes ☑No

If Yes:

i. Estimate methane generation in tons/year (metric): _____

ii. Describe any methane capture, control or elimination measures included in project design (e.g., combustion to generate heat or electricity, flaring): _____

i. Will the proposed action result in the release of air pollutants from open-air operations or processes, such as quarry or landfill operations? ☐Yes ☑No

If Yes: Describe operations and nature of emissions (e.g., diesel exhaust, rock particulates/dust):

j. Will the proposed action result in a substantial increase in traffic above present levels or generate substantial new demand for transportation facilities or services? ☐Yes ☑No

If Yes:

i. When is the peak traffic expected (Check all that apply): ☐ Morning ☐ Evening ☐Weekend ☐ Randomly between hours of _____ to _____.

ii. For commercial activities only, projected number of truck trips/day and type (e.g., semi trailers and dump trucks): _____

iii. Parking spaces: Existing _____ Proposed _____ Net increase/decrease _____

iv. Does the proposed action include any shared use parking? ☐Yes ☐No

v. If the proposed action includes any modification of existing roads, creation of new roads or change in existing access, describe:

vi. Are public/private transportation service(s) or facilities available within ½ mile of the proposed site? ☐Yes ☐No

vii Will the proposed action include access to public transportation or accommodations for use of hybrid, electric or other alternative fueled vehicles? ☐Yes ☐No

viii. Will the proposed action include plans for pedestrian or bicycle accommodations for connections to existing pedestrian or bicycle routes? ☐Yes ☐No

k. Will the proposed action (for commercial or industrial projects only) generate new or additional demand for energy? ☑Yes ☐No

If Yes:

i. Estimate annual electricity demand during operation of the proposed action: TBD

ii. Anticipated sources/suppliers of electricity for the project (e.g., on-site combustion, on-site renewable, via grid/local utility, or other):

Grid/local utility

iii. Will the proposed action require a new, or an upgrade, to an existing substation? ☐Yes ☑No

l. Hours of operation. Answer all items which apply.

i. During Construction:

- Monday - Friday: 8:00 AM--10:00 PM
- Saturday: 8:00 AM--10:00 PM
- Sunday: 8:00 AM--10:00 PM
- Holidays: 8:00 AM--10:00 PM

ii. During Operations:

- Monday - Friday: 24/5
- Saturday: As required
- Sunday: As required
- Holidays: As required

m. Will the proposed action produce noise that will exceed existing ambient noise levels during construction, operation, or both? ☑ Yes ☐ No

If yes:

i. Provide details including sources, time of day and duration:

Construction equipment and tools at times permitted by Town Code.

ii. Will the proposed action remove existing natural barriers that could act as a noise barrier or screen? ☐ Yes ☑ No

Describe: _____

n. Will the proposed action have outdoor lighting? ☑ Yes ☐ No

If yes:

i. Describe source(s), location(s), height of fixture(s), direction/aim, and proximity to nearest occupied structures:

Parking lot and security lighting as permitted by Town Code.

ii. Will proposed action remove existing natural barriers that could act as a light barrier or screen? ☐ Yes ☑ No

Describe: _____

o. Does the proposed action have the potential to produce odors for more than one hour per day? ☐ Yes ☑ No

If Yes, describe possible sources, potential frequency and duration of odor emissions, and proximity to nearest occupied structures: _____

p. Will the proposed action include any bulk storage of petroleum (combined capacity of over 1,100 gallons) or chemical products 185 gallons in above ground storage or any amount in underground storage? ☐ Yes ☑ No

If Yes:

i. Product(s) to be stored _____

ii. Volume(s) _____ per unit time _____ (e.g., month, year)

iii. Generally, describe the proposed storage facilities: _____

q. Will the proposed action (commercial, industrial and recreational projects only) use pesticides (i.e., herbicides, insecticides) during construction or operation? ☑ Yes ☐ No

If Yes:

i. Describe proposed treatment(s):

Landscape maintenance and pest control as required.

ii. Will the proposed action use Integrated Pest Management Practices? ☑ Yes ☐ No

r. Will the proposed action (commercial or industrial projects only) involve or require the management or disposal of solid waste (excluding hazardous materials)? ☑ Yes ☐ No

If Yes:

i. Describe any solid waste(s) to be generated during construction or operation of the facility:

- Construction: TBD tons per TBD (unit of time)
- Operation : 20-25 tons per month (unit of time)

ii. Describe any proposals for on-site minimization, recycling or reuse of materials to avoid disposal as solid waste:

- Construction: Debris recycling will be in accordance with all applicable local requirements.
- Operation: Recyling will be in accordance with County requirements.

iii. Proposed disposal methods/facilities for solid waste generated on-site:

- Construction: Private carter.
- Operation: Private carter.

s. Does the proposed action include construction or modification of a solid waste management facility? ☐ Yes ☑ No

If Yes:

i. Type of management or handling of waste proposed for the site (e.g., recycling or transfer station, composting, landfill, or other disposal activities): _____

ii. Anticipated rate of disposal/processing:

- _____ Tons/month, if transfer or other non-combustion/thermal treatment, or
- _____ Tons/hour, if combustion or thermal treatment

iii. If landfill, anticipated site life: _____ years

t. Will the proposed action at the site involve the commercial generation, treatment, storage, or disposal of hazardous waste? ☐ Yes ☑ No

If Yes:

i. Name(s) of all hazardous wastes or constituents to be generated, handled or managed at facility: _____

ii. Generally describe processes or activities involving hazardous wastes or constituents: _____

iii. Specify amount to be handled or generated _____ tons/month

iv. Describe any proposals for on-site minimization, recycling or reuse of hazardous constituents: _____

v. Will any hazardous wastes be disposed at an existing offsite hazardous waste facility? ☐ Yes ☐ No

If Yes: provide name and location of facility: _____

If No: describe proposed management of any hazardous wastes which will not be sent to a hazardous waste facility: _____

E. Site and Setting of Proposed Action

E.1. Land uses on and surrounding the project site

a. Existing land uses.

i. Check all uses that occur on, adjoining and near the project site.

☐ Urban ☐ Industrial ☑ Commercial ☑ Residential (suburban) ☐ Rural (non-farm)
☐ Forest ☐ Agriculture ☐ Aquatic ☐ Other (specify): _____

ii. If mix of uses, generally describe: _____

b. Land uses and covertypes on the project site.

Land use or Covertype	Current Acreage	Acreage After Project Completion	Change (Acres +/-)
• Roads, buildings, and other paved or impervious surfaces	0.04	15.75	+15.71
• Forested	25.96	1.50	-24.46
• Meadows, grasslands or brushlands (non-agricultural, including abandoned agricultural)	7.93	7.95	+0.02
• Agricultural (includes active orchards, field, greenhouse etc.)	0	0	0
• Surface water features (lakes, ponds, streams, rivers, etc.)	0	1.50	+1.50
• Wetlands (freshwater or tidal)	1.28	1.28	0
• Non-vegetated (bare rock, earth or fill)	0	0	0
• Other Describe: Landscaping	0	7.23	+7.23

c. Is the project site presently used by members of the community for public recreation? ☐ Yes ☑ No

i. If Yes: explain: _____

d. Are there any facilities serving children, the elderly, people with disabilities (e.g., schools, hospitals, licensed day care centers, or group homes) within 1500 feet of the project site? ☐ Yes ☑ No

If Yes,

i. Identify Facilities:

_____

_____

e. Does the project site contain an existing dam? ☐ Yes ☑ No

If Yes:

i. Dimensions of the dam and impoundment:

- Dam height: _____ feet
- Dam length: _____ feet
- Surface area: _____ acres
- Volume impounded: _____ gallons OR acre-feet

ii. Dam's existing hazard classification: _____

iii. Provide date and summarize results of last inspection:

_____

_____

f. Has the project site ever been used as a municipal, commercial or industrial solid waste management facility, or does the project site adjoin property which is now, or was at one time, used as a solid waste management facility? ☐ Yes ☑ No

If Yes:

i. Has the facility been formally closed? ☐ Yes ☐ No

- If yes, cite sources/documentation: _____

ii. Describe the location of the project site relative to the boundaries of the solid waste management facility:

_____

_____

iii. Describe any development constraints due to the prior solid waste activities: _____

_____

g. Have hazardous wastes been generated, treated and/or disposed of at the site, or does the project site adjoin property which is now or was at one time used to commercially treat, store and/or dispose of hazardous waste? ☐ Yes ☑ No

If Yes:

i. Describe waste(s) handled and waste management activities, including approximate time when activities occurred:

_____

_____

h. Potential contamination history. Has there been a reported spill at the proposed project site, or have any remedial actions been conducted at or adjacent to the proposed site? ☐ Yes ☑ No

If Yes:

i. Is any portion of the site listed on the NYSDEC Spills Incidents database or Environmental Site Remediation database? Check all that apply: ☐ Yes ☐ No

☐ Yes – Spills Incidents database Provide DEC ID number(s): _____

☐ Yes – Environmental Site Remediation database Provide DEC ID number(s): _____

☐ Neither database

ii. If site has been subject of RCRA corrective activities, describe control measures: _____

_____

_____

iii. Is the project within 2000 feet of any site in the NYSDEC Environmental Site Remediation database? ☐ Yes ☑ No

If yes, provide DEC ID number(s): _____

iv. If yes to (i), (ii) or (iii) above, describe current status of site(s):

_____

_____

v. Is the project site subject to an institutional control limiting property uses? ☐ Yes ☑ No

- If yes, DEC site ID number: _____
- Describe the type of institutional control (e.g., deed restriction or easement): _____
- Describe any use limitations: _____
- Describe any engineering controls: _____
- Will the project affect the institutional or engineering controls in place? ☐ Yes ☐ No
- Explain: _____

E.2. Natural Resources On or Near Project Site

a. What is the average depth to bedrock on the project site? 1.2-2.5 feet

b. Are there bedrock outcroppings on the project site? ☐ Yes ☑ No
If Yes, what proportion of the site is comprised of bedrock outcroppings? _____ %

c. Predominant soil type(s) present on project site:

MdB Mardin gravelly silt loam	35 %
ANC/AND Arnot-Lordstown complex	40 %
SXC Swartswood and Mardin soils	15 %

d. What is the average depth to the water table on the project site? Average: 1.5-6.5+ feet

e. Drainage status of project site soils:
☑ Well Drained: 55 % of site
☑ Moderately Well Drained: 40 % of site
☑ Poorly Drained 5 % of site

f. Approximate proportion of proposed action site with slopes:
☑ 0-10%: 67.05 % of site
☑ 10-15%: 14.18 % of site
☑ 15% or greater: 18.77 % of site

g. Are there any unique geologic features on the project site? ☐ Yes ☑ No
If Yes, describe: _____

h. Surface water features.

i. Does any portion of the project site contain wetlands or other waterbodies (including streams, rivers, ponds or lakes)? ☑ Yes ☐ No

ii. Do any wetlands or other waterbodies adjoin the project site? ☑ Yes ☐ No

If Yes to either *i* or *ii*, continue. If No, skip to E.2.i.

iii. Are any of the wetlands or waterbodies within or adjoining the project site regulated by any federal, state or local agency? ☑ Yes ☐ No

iv. For each identified regulated wetland and waterbody on the project site, provide the following information:

- Streams: Name 862-231 Classification C
- Lakes or Ponds: Name _____ Classification _____
- Wetlands: Name Federal Waters Approximate Size _____
- Wetland No. (if regulated by DEC) _____

v. Are any of the above water bodies listed in the most recent compilation of NYS water quality-impaired waterbodies? ☐ Yes ☑ No

If yes, name of impaired water body/bodies and basis for listing as impaired: _____

i. Is the project site in a designated Floodway? ☐ Yes ☑ No

j. Is the project site in the 100-year Floodplain? ☐ Yes ☑ No

k. Is the project site in the 500-year Floodplain? ☐ Yes ☑ No

l. Is the project site located over, or immediately adjoining, a primary, principal or sole source aquifer? ☐ Yes ☑ No
If Yes:
i. Name of aquifer: _____

m. Identify the predominant wildlife species that occupy or use the project site:
Typical suburban species

n. Does the project site contain a designated significant natural community? ☐ Yes ☑ No
If Yes:
i. Describe the habitat/community (composition, function, and basis for designation):
ii. Source(s) of description or evaluation:
iii. Extent of community/habitat:
- Currently: _____ acres
- Following completion of project as proposed: _____ acres
- Gain or loss (indicate + or -): _____ acres

o. Does project site contain any species of plant or animal that is listed by the federal government or NYS as endangered or threatened, or does it contain any areas identified as habitat for an endangered or threatened species? ☐ Yes ☑ No
If Yes:
i. Species and listing (endangered or threatened):

p. Does the project site contain any species of plant or animal that is listed by NYS as rare, or as a species of special concern? ☐ Yes ☑ No
If Yes:
i. Species and listing:

q. Is the project site or adjoining area currently used for hunting, trapping, fishing or shell fishing? ☐ Yes ☑ No
If yes, give a brief description of how the proposed action may affect that use:

E.3. Designated Public Resources On or Near Project Site

a. Is the project site, or any portion of it, located in a designated agricultural district certified pursuant to Agriculture and Markets Law, Article 25-AA, Section 303 and 304? ☐ Yes ☑ No
If Yes, provide county plus district name/number:

b. Are agricultural lands consisting of highly productive soils present? ☐ Yes ☑ No
i. If Yes: acreage(s) on project site?
ii. Source(s) of soil rating(s):

c. Does the project site contain all or part of, or is it substantially contiguous to, a registered National Natural Landmark? ☐ Yes ☑ No
If Yes:
i. Nature of the natural landmark: ☐ Biological Community ☐ Geological Feature
ii. Provide brief description of landmark, including values behind designation and approximate size/extent:

d. Is the project site located in or does it adjoin a state listed Critical Environmental Area? ☐ Yes ☑ No
If Yes:
i. CEA name:
ii. Basis for designation:
iii. Designating agency and date:

e. Does the project site contain, or is it substantially contiguous to, a building, archaeological site, or district which is listed on the National or State Register of Historic Places, or that has been determined by the Commissioner of the NYS Office of Parks, Recreation and Historic Preservation to be eligible for listing on the State Register of Historic Places? ☐ Yes ☑ No

If Yes:

i. Nature of historic/archaeological resource: ☐ Archaeological Site ☐ Historic Building or District

ii. Name: _____

iii. Brief description of attributes on which listing is based:

_____

f. Is the project site, or any portion of it, located in or adjacent to an area designated as sensitive for archaeological sites on the NY State Historic Preservation Office (SHPO) archaeological site inventory? ☑ Yes ☐ No

g. Have additional archaeological or historic site(s) or resources been identified on the project site? ☐ Yes ☑ No

If Yes:

i. Describe possible resource(s): _____

ii. Basis for identification: _____

h. Is the project site within fives miles of any officially designated and publicly accessible federal, state, or local scenic or aesthetic resource? ☐ Yes ☑ No

If Yes:

i. Identify resource: _____

ii. Nature of, or basis for, designation (e.g., established highway overlook, state or local park, state historic trail or scenic byway, etc.): _____

iii. Distance between project and resource: _____ miles.

i. Is the project site located within a designated river corridor under the Wild, Scenic and Recreational Rivers Program 6 NYCRR 666? ☐ Yes ☑ No

If Yes:

i. Identify the name of the river and its designation: _____

ii. Is the activity consistent with development restrictions contained in 6NYCRR Part 666? ☐ Yes ☐ No

F. Additional Information

Attach any additional information which may be needed to clarify your project.

If you have identified any adverse impacts which could be associated with your proposal, please describe those impacts plus any measures which you propose to avoid or minimize them.

G. Verification

I certify that the information provided is true to the best of my knowledge.

Applicant/Sponsor Name JMC Planning Engineering Landscape Architecture & Land Surveying, PLLC Date 1/22/2021

Signature Joseph P. Modafferi, Jr. RLA Title Senior Project Manager

PRINT FORM

EAF Mapper Summary Report

Friday, December 18, 2020 12:05 PM

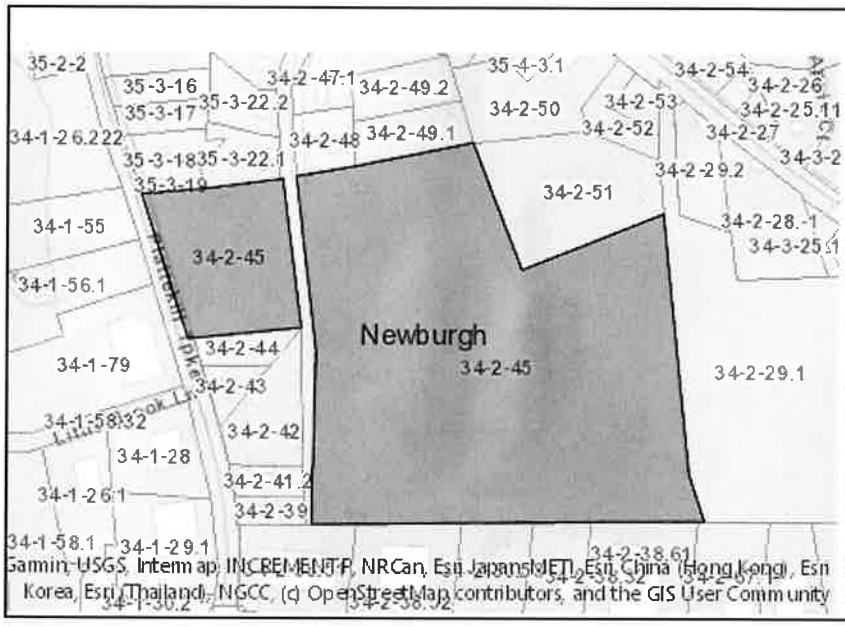

Disclaimer: The EAF Mapper is a screening tool intended to assist project sponsors and reviewing agencies in preparing an environmental assessment form (EAF). Not all questions asked in the EAF are answered by the EAF Mapper. Additional information on any EAF question can be obtained by consulting the EAF Workbooks. Although the EAF Mapper provides the most up-to-date digital data available to DEC, you may also need to contact local or other data sources in order to obtain data not provided by the Mapper. Digital data is not a substitute for agency determinations.

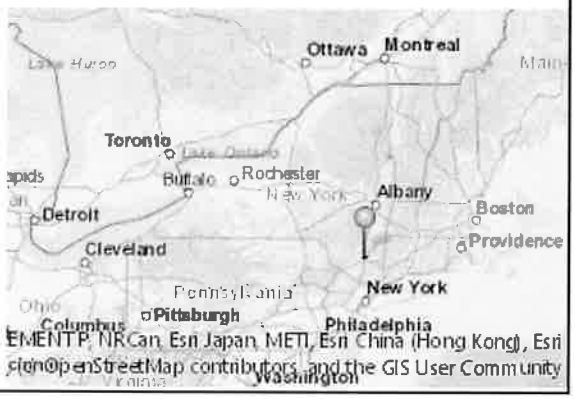

B.i.i [Coastal or Waterfront Area]	No
B.i.ii [Local Waterfront Revitalization Area]	No
C.2.b. [Special Planning District]	Digital mapping data are not available or are incomplete. Refer to EAF Workbook.
E.1.h [DEC Spills or Remediation Site - Potential Contamination History]	Digital mapping data are not available or are incomplete. Refer to EAF Workbook.
E.1.h.i [DEC Spills or Remediation Site - Listed]	Digital mapping data are not available or are incomplete. Refer to EAF Workbook.
E.1.h.i [DEC Spills or Remediation Site - Environmental Site Remediation Database]	Digital mapping data are not available or are incomplete. Refer to EAF Workbook.
E.1.h.iii [Within 2,000' of DEC Remediation Site]	No
E.2.g [Unique Geologic Features]	No
E.2.h.i [Surface Water Features]	Yes
E.2.h.ii [Surface Water Features]	Yes
E.2.h.iii [Surface Water Features]	Yes - Digital mapping information on local and federal wetlands and waterbodies is known to be incomplete. Refer to EAF Workbook.
E.2.h.iv [Surface Water Features - Stream Name]	862-231
E.2.h.iv [Surface Water Features - Stream Classification]	C
E.2.h.iv [Surface Water Features - Wetlands Name]	Federal Waters
E.2.h.v [Impaired Water Bodies]	No
E.2.i. [Floodway]	No
E.2.j. [100 Year Floodplain]	No
E.2.k. [500 Year Floodplain]	No

E.2.l. [Aquifers]	No
E.2.n. [Natural Communities]	No
E.2.o. [Endangered or Threatened Species]	No
E.2.p. [Rare Plants or Animals]	No
E.3.a. [Agricultural District]	No
E.3.c. [National Natural Landmark]	No
E.3.d [Critical Environmental Area]	No
E.3.e. [National or State Register of Historic Places or State Eligible Sites]	Digital mapping data are not available or are incomplete. Refer to EAF Workbook.
E.3.f. [Archeological Sites]	Yes
E.3.i. [Designated River Corridor]	No

SITE PLAN APPROVAL DRAWINGS

FARRELL INDUSTRIAL PARK

TAX MAP SECTION 34 | BLOCK 2 | LOT 45
ROUTE 300
TOWN OF NEWBURGH, NY
TOWN OF NEWBURGH PROJECT NO. 2020-16

Applicant:
FARRELL BUILDING COMPANY
2317 MONTAUK HIGHWAY
BRIDGEHAMPTON, NY 11932
631-766-0023

Owner:
CHUN S. MCGLASSON
16 ANNA COURT
CARMEL, NY 10512

Attorney:
STANELY A. SCHUTZMAN, P.C.
ROCKLAND COUNTY OFFICE:
61 S. MAIN STREET
NEW CITY, N.Y. 10956
PHONE: (845) 600-8LAW (8529)

DUTCHESS COUNTY OFFICE:
P.O. BOX 969
POUGHKEEPSIE, N.Y. 12602

Site Planner, Civil & Traffic Engineer, Surveyor and Landscape Architect:
JMC PLANNING ENGINEERING LANDSCAPE ARCHITECTURE & LAND SURVEYING PLLC:
120 BEDFORD ROAD
ARMONK, NY 10504
914-273-5225

Architect:
CLARIS DESIGN BUILD
53 CHURCH HILL RD
NEWTOWN, CT 06470
203-364-9460

Geotechnical Engineer:
CARLIN-SIMPSON & ASSOCIATES
61 MAIN STREET
SAYREVILLE, NJ 08872
732-432-5757

Natural Resources Consultant:
ECOLOGICAL SOLUTIONS, LLC
1248 SOUTHFORD ROAD
SOUTHBURY, CT 06488
203-910-4716

JMC Drawing List:

C-000 COVER SHEET
C-010 EXISTING CONDITIONS MAP AND SITE REMOVALS PLAN
C-100 LAYOUT PLAN
C-110 PRELIMINARY LOT CONSOLIDATION & SUBDIVISION PLAN
C-200 GRADING PLAN
C-210 DRIVEWAY PROFILE
C-300 UTILITIES PLAN
C-310 ON SITE WASTEWATER TREATMENT SYSTEM PLAN
C-400 EROSION AND SEDIMENT CONTROL PLAN
C-600 LIGHTING PLAN
C-700 TRUCK TURNING PLAN
C-900 CONSTRUCTION DETAILS
C-901 CONSTRUCTION DETAILS
C-902 CONSTRUCTION DETAILS
C-903 CONSTRUCTION DETAILS
C-904 CONSTRUCTION DETAILS
C-905 CONSTRUCTION DETAILS (OWTS)
C-906 CONSTRUCTION DETAILS (SITE ENTRANCE)
C-907 CONSTRUCTION DETAILS (SITE ENTRANCE)
L-100 LANDSCAPE PLAN
L-900 LANDSCAPE DETAILS

Claris Design Build Drawing List:

A101 FLOOR PLANS BUILDINGS A & B
A102 SIGN DETAILS
A201 BUILDING A ELEVATIONS
A202 BUILDING B ELEVATIONS
A203 RENDERINGS

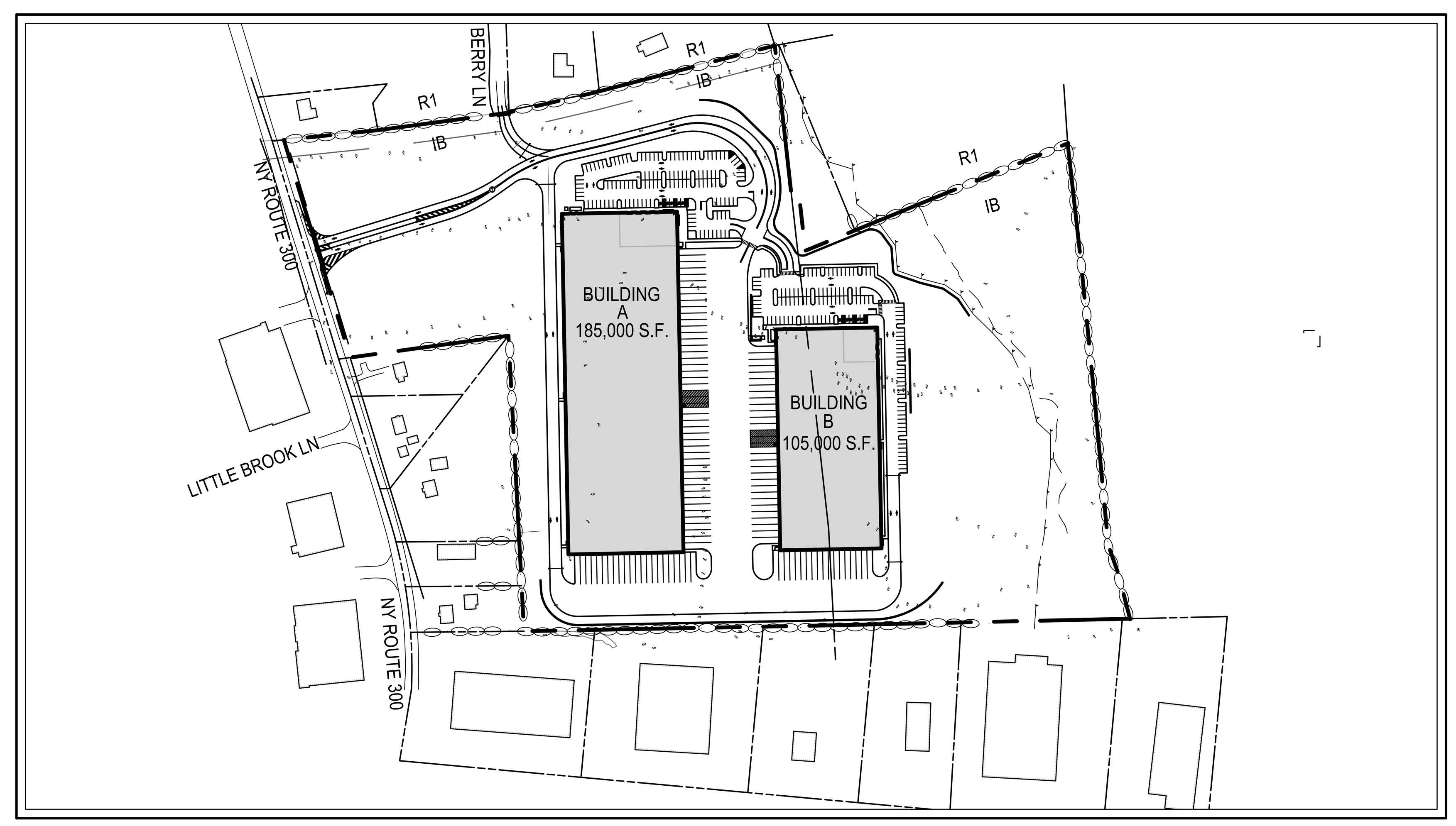

AREA MAP
SCALE: N.T.S.

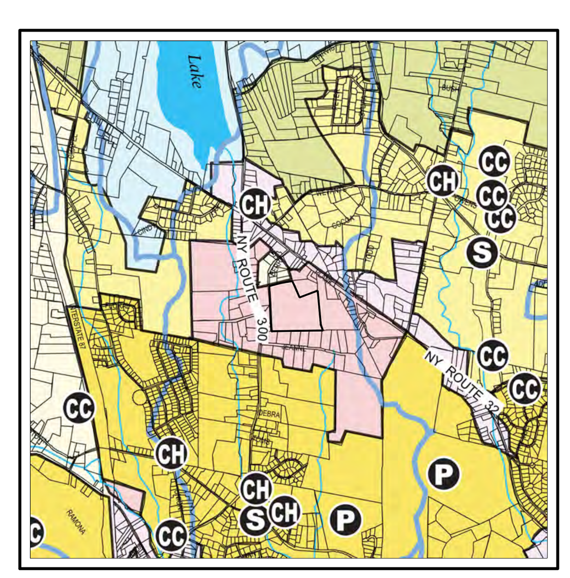

ZONING MAP
SCALE: 1" = 2,000'
SOURCE: TOWN OF NEWBURGH

LEGEND

- SITE PROPERTY LINE
- ZONING BOUNDARY
- LOT LINE
- IB — INTERCHANGE BUSINESS ZONE
- R1 — RESIDENTIAL ZONE
- PROPOSED BUILDING LINE
- PROPOSED CURB LINE
- EXISTING BUILDING

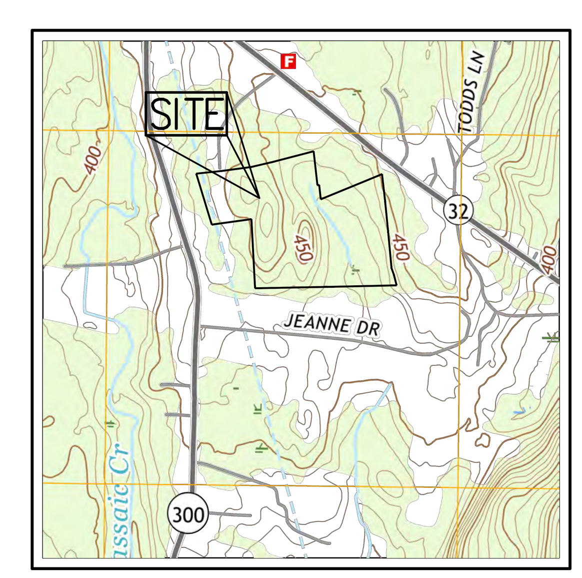

VICINITY MAP
SCALE: 1" = 1,000'
SOURCE: USGS TOPOGRAPHY

TABLE OF LAND USE

SECTION 34, BLOCK 2, LOT 45[1]
ZONE "IB" – "INTERCHANGE BUSINESS"
PROPOSED USE: WAREHOUSE (D9)
PROPOSED ACCESSORY USES: OFF STREET PARKING (A4), TRUCK LOADING FACILITIES (A5)
FIRE DISTRICT: CRONOMER VALLEY
WATER DISTRICT: NEWBURGH
SCHOOL DISTRICT: NEWBURGH

DESCRIPTION		REQUIRED			EXISTING	PROPOSED		
LOT AREA	(SQUARE FEET)	44,000			±1,545,969[1]	NO CHANGE[1]		
LOT WIDTH	(FEET)	150			±965	NO CHANGE		
LOT DEPTH	(FEET)	150			±1,311	NO CHANGE		
LOT BUILDING COVERAGE	(PERCENT)	40			N/A[2]	18.76[3]		
BUILDING HEIGHT	(FEET)	40			N/A[2]	49[4]		
LOT SURFACE COVERAGE	(PERCENT)	80			N/A[2]	45.48[5]		
YARDS								
FRONT BUILDING SETBACK	(FEET)	60[6]			N/A[2]	±329		
REAR BUILDING SETBACK	(FEET)	60			N/A[2]	±454		
SIDE BUILDING SETBACK	(FEET)	30/80/228[7]			N/A[2]	±105/346/241[7]		
SIDE YARD BUFFER[8]	(FEET)	100			N/A[2]	±100		
PARKING SUMMARY		BLDG A	BLDG B	TOTAL		BLDG A	BLDG B	TOTAL
TOTAL SPACES	(SPACES)	124[9][10]	70[9][10]	194[9][10]	N/A[2]	129	122	251
STANDARD SPACES	(SPACES)	119	67	186	N/A[2]	124	117	241
HANDICAP SPACES	(SPACES)	5[11]	3[11]	8[11]	N/A[2]	5	5	10
LOADING SPACES	(SPACES)	6[12]	4[12]	10[12]	N/A[2]	44	28	72
TRUCK/TRAILER SPACE	(SPACES)	N/A[2]	N/A[2]	N/A[2]	N/A[2]	22	18	40

(1) THE SITE IS ONE TAX LOT THAT INCLUDES TWO PARCELS. THE TWO EXISTING PARCELS WILL BE MERGED THROUGH THE OFFICE OF THE TAX ASSESSOR AT THE APPROPRIATE TIME.

(2) NOT APPLICABLE

(3) THE LOT BUILDING COVERAGE WAS CALCULATED AS FOLLOWS:
TOTAL BUILDING AREA – 185,000 S.F. (BUILDING A) + 105,000 S.F. (BUILDING B) = 290,000 S.F.
BUILDING COVERAGE – TOTAL BUILDING AREA/LOT AREA = 290,000 S.F./1,545,969 S.F. = 18.76%

(4) THE BUILDING HEIGHT SHOWN ACCOUNTS FOR THE GRADING REQUIRED TO ACCOMMODATE LOADING AREAS FOR THE WAREHOUSES. THE ACTUAL HEIGHT OF THE BUILDING, WITHOUT CONSIDERATION OF THE AVERAGE GRADE IS 45 FEET (A 42 FT HIGH FLAT ROOF AND A 3 FT PARAPET – SEE ARCHITECTURAL DRAWINGS.) THE AVERAGE GRADE AT EACH BUILDING HAS BEEN CALCULATED BY MEASURING THE FINISHED GRADE ALONG THE FACADE FACING THE STREET AT 50 FOOT INCREMENTS AND FINDING THE AVERAGE ELEVATION AS FOLLOWS:
BUILDING A = (452 + 452 + 456 + 456 + 456 + 456 + 456 + 456 + 456 + 456 + 456 + 456 + 456 + 456 + 456 + 451) / 16 = 455.2
BUILDING B = (456 + 452 + 452 + 452 + 452 + 452 + 452 + 452 + 452 + 452 + 450) / 11 = 452.2
THE BUILDING HEIGHT FOR EACH BUILDING WAS THEN CALCULATED BY DETERMINING THE DIFFERENCE BETWEEN THE AVERAGE GRADE AND THE FINISHED FLOOR ELEVATION, THEN ADDING THE DIFFERENCE TO THE ACTUAL BUILDING HEIGHT AS FOLLOWS:
BUILDING A = (456 – 455.2) + 45 = 45.8
BUILDING B = (456 – 452.2) + 45 = 48.8
ACCORDINGLY, FOR THE PURPOSE OF THIS APPLICATION THE BUILDING HEIGHTS FOR BUILDINGS A AND B ARE 46 AND 49 RESPECTIVELY. A VARIANCE IS REQUIRED AND WILL BE REQUESTED FROM THE ZBA.

(5) THE LOT SURFACE COVERAGE WAS CALCULATED AS FOLLOWS:
TOTAL COVERAGE AREA – 185,000 S.F. (BUILDING A) + 105,000 S.F. (BUILDING B) + 413,062 (PAVEMENT & SIDEWALKS) = 703,062 S.F.
SURFACE COVERAGE – TOTAL COVERAGE AREA/LOT AREA = 703,062 S.F./1,545,969 S.F. = 45.48%

(6) PURSUANT TO SECTION 185–18.C.4.(b). OF THE TOWN CODE, FRONT YARDS ABUTTING A STATE HIGHWAY SHALL BE AT LEAST 60 FEET.

(7) PURSUANT TO THE TABLE OF USE AND BULK REQUIREMENTS FOR THE IB DISTRICT, THE MINIMUM SIDE YARD DIMENSION SHALL BE 30 FEET AND THE MINIMUM DIMENSION FOR BOTH SIDE YARDS SHALL BE 80 FEET. PURSUANT TO SECTION 185–18.C.5. OF THE TOWN CODE, SIDE YARDS OF A LOT IN THE IB DISTRICT ABUTTING A RESIDENTIAL DISTRICT WITH A TOTAL BUILDING FLOOR AREA BETWEEN 250,000 S.F. AND 500,000 S.F. SHALL HAVE A SETBACK OF 200 FEET, PLUS AN ADDITIONAL 2 FEET FOR EACH FOOT OF BUILDING HEIGHT OVER 35 FEET. THE NUMBERS PROVIDED ARE "ONE SIDE YARD/BOTH SIDE YARDS/SIDE YARD ADJACENT TO A RESIDENTIAL DISTRICT."

(8) PURSUANT TO SECTION 185–21.D.2. OF THE TOWN CODE, SITES IN THE IB ZONE THAT ARE ADJACENT TO A RESIDENTIAL ZONE SHALL HAVE A BUFFER STRIP OF 75 FEET. PURSUANT TO SECTION 185–21.D.3., THE BUFFER SHALL BE INCREASED TO 100 FEET. PURSUANT TO SECTION 185–21.E.6., THE 40 FEET CLOSEST TO THE PROPERTY LINE SHALL REMAIN UNDISTURBED IN ITS EXISTING VEGETATIVE STATE AND THE REMAINING 60 FEET SHALL BE ENHANCED.

(9) SINCE THE ENDUSER OF THE PROPOSED WAREHOUSE IS UNKNOWN AT THIS TIME, THE ANTICIPATED NUMBER OF EMPLOYEES HAS BEEN CALCULATED BASED UPON THE ENERGYSTAR.GOV "WAREHOUSE SPACE USE INFORMATION" AND "WAREHOUSE DATA TRENDS", WHICH INDICATES AN AVERAGE OCCUPANT DENSITY FOR THE TOTAL NUMBER OF EMPLOYEES OF 0.5 OCCUPANTS PER 1,000 S.F. AND A 95TH PERCENTILE OF 1.5 EMPLOYEES PER 1,000 S.F. FOR THE PURPOSE OF THIS APPROVAL, IT HAS BEEN CONSERVATIVELY ASSUMED THAT THIS FACILITY WILL OPERATE WITH 1 EMPLOYEE PER 1,000 S.F. BASED UPON THIS, BUILDING A WILL HAVE 185 EMPLOYEES AND BUILDING B WILL HAVE 105 EMPLOYEES, FOR A TOTAL OF 290 EMPLOYEES.

(10) THE TOWN PARKING REQUIREMENT IS 2 SPACES PER 3 EMPLOYEES. THEREFORE, BUILDING A REQUIRES 124 PARKING SPACES (185/3 = 61.66) (61.66 X 2 = 123.32). BUILDING B REQUIRES 70 PARKING SPACES (105/3 = 35 (35 X 2 = 70). FOR A TOTAL REQUIRED PARKING SPACES OF 194.

(11) IN ACCORDANCE WITH ADA REQUIREMENTS, BUILDING A, WHICH REQUIRES 123.32 PARKING SPACES NEEDS 5 HANDICAP PARKING SPACES. BUILDING B, WHICH REQUIRES 70 PARKING SPACES NEEDS 3 HANDICAP PARKING SPACES, RESULTING IN A TOTAL REQUIRED HANDICAP PARKING SPACES OF 8.

(12) THE TOWN LOADING REQUIREMENT IS 2 SPACES FOR THE FIRST 40,000 S.F. AND ONE ADDITIONAL FOR EACH ADDITIONAL 40,000 S.F. THEREFORE, BUILDING A (185,000 S.F.) REQUIRES 6 LOADING SPACES (185,000 – 40,000 = 145,000) (145,000/40,000 = 3.62) (2 + 3.62 = 5.62). BUILDING B (105,000 S.F.) REQUIRES 4 LOADING SPACES (105,000 – 40,000 = 65,000) (65,000/40,000 = 1.625) (2 + 1.625 = 3.625) FOR A TOTAL REQUIRED LOADING SPACES OF 10.

GENERAL CONSTRUCTION NOTES APPLY TO ALL WORK HEREIN:

1. PRIOR TO CONSTRUCTION, THE CONTRACTOR SHALL CALL 811 "DIG SAFELY" (1–800–962–7962) TO HAVE UNDERGROUND UTILITIES LOCATED. EXPLORATORY EXCAVATIONS SHALL COMPLY WITH CODE 753 REQUIREMENTS. NO WORK SHALL COMMENCE UNTIL ALL THE OPERATORS HAVE NOTIFIED THE CONTRACTOR THAT THEIR UTILITIES HAVE BEEN LOCATED. THE CONTRACTOR SHALL BE RESPONSIBLE FOR THE PRESERVATION OF ALL PUBLIC AND PRIVATE UNDERGROUND AND SURFACE UTILITIES AND STRUCTURES AT OR ADJACENT TO THE SITE OF CONSTRUCTION, INSOFAR AS THEY MAY BE ENDANGERED BY THE CONTRACTOR'S OPERATIONS. THIS SHALL HOLD TRUE WHETHER OR NOT THEY ARE SHOWN ON THE CONTRACT DRAWINGS. IF THEY ARE SHOWN ON THE DRAWINGS, THEIR LOCATIONS ARE NOT GUARANTEED EVEN THOUGH THE INFORMATION WAS OBTAINED FROM THE BEST AVAILABLE SOURCES, AND IN ANY EVENT, OTHER UTILITIES ON THESE PLANS MAY BE ENCOUNTERED IN THE FIELD. THE CONTRACTOR SHALL, AT HIS OWN EXPENSE, IMMEDIATELY REPAIR OR REPLACE ANY STRUCTURES OR UTILITIES THAT HE DAMAGES, AND SHALL CONSTANTLY PROCEED WITH CAUTION TO PREVENT UNDUE INTERRUPTION OF UTILITY SERVICE.

2. CONTRACTOR SHALL HAND DIG TEST PITS TO VERIFY THE LOCATION OF ALL EXISTING UNDERGROUND UTILITIES PRIOR TO THE START OF CONSTRUCTION. CONTRACTOR SHALL VERIFY EXISTING UTILITIES DEPTHS AND ADVISE OF ANY CONFLICTS WITH PROPOSED UTILITIES. IF CONFLICTS ARE PRESENT. THE OWNER'S FIELD REPRESENTATIVE, JMC, PLLC AND THE APPLICABLE MUNICIPALITY OR AGENCY SHALL BE NOTIFIED IN WRITING. THE EXISTING/PROPOSED UTILITIES RELOCATION SHALL BE DESIGNED BY JMC, PLLC.

3. CONTRACTOR IS RESPONSIBLE FOR OBTAINING ANY AND ALL LOCAL PERMITS REQUIRED.

4. ALL WORK SHALL BE DONE IN STRICT COMPLIANCE WITH ALL APPLICABLE NATIONAL, STATE, AND LOCAL CODES, STANDARDS, ORDINANCES, RULES, AND REGULATIONS. ALL CONSTRUCTION WORK SHALL BE PERFORMED IN ACCORDANCE WITH ALL SAFETY CODES. APPLICABLE SAFETY CODES MEAN THE LATEST EDITION INCLUDING ANY AND ALL AMENDMENTS, REVISIONS, AND ADDITIONS THERETO, TO THE FEDERAL DEPARTMENT OF LABOR, OCCUPATIONAL SAFETY AND HEALTH ADMINISTRATION'S OCCUPATIONAL SAFETY AND HEALTH STANDARDS (OSHA); AND APPLICABLE SAFETY, HEALTH REGULATIONS AND BUILDING CODES FOR CONSTRUCTION IN THE STATE OF NEW YORK. THE CONTRACTOR SHALL BE RESPONSIBLE FOR GUARDING AND PROTECTING ALL OPEN EXCAVATIONS IN ACCORDANCE WITH THE PROVISION OF SECTION 107–05 (SAFETY AND HEALTH REQUIREMENTS) OF THE NYSDOT STANDARD SPECIFICATIONS. IF THE CONTRACTOR PERFORMS ANY HAZARDOUS CONSTRUCTION PRACTICES, ALL OPERATIONS IN THE AFFECTED AREA SHALL BE DISCONTINUED AND IMMEDIATE ACTION SHALL BE TAKEN TO CORRECT THE SITUATION TO THE SATISFACTION OF THE APPROVAL AUTHORITY HAVING JURISDICTION.

5. CONTRACTOR SHALL MAINTAIN ACCESS TO ALL PROPERTIES AFFECTED BY THE SCOPE OF WORK SHOWN HEREON AT ALL TIMES TO THE SATISFACTION OF THE OWNERS REPRESENTATIVE. RAMPING CONSTRUCTION TO PROVIDE ACCESS MAY BE CONSTRUCTED WITH SUBBASE MATERIAL EXCEPT THAT TEMPORARY ASPHALT CONCRETE SHALL BE PLACED AS DIRECTED BY THE ENGINEER. THE CONTRACTOR SHALL BE RESPONSIBLE FOR PROVIDING SAFE PEDESTRIAN ACCESS AT ALL TIMES.

6. CONTRACTOR SHALL MAINTAIN THE INTEGRITY OF EXISTING PAVEMENT TO REMAIN.

SUBSURFACE UTILITY LOCATIONS ARE BASED ON A COMPILATION OF FIELD EVIDENCE, AVAILABLE RECORD PLANS AND/OR UTILITY MARK-OUTS. THE LOCATION OR COMPLETENESS OF UNDERGROUND INFORMATION CANNOT BE GUARANTEED. VERIFY THE ACTUAL LOCATION OF ALL UTILITIES PRIOR TO EXCAVATION OR CONSTRUCTION.

811 Know what's below. Call before you dig.

No.	Revision	Date	By

Previous Editions Obsolete

JMC Planning, Engineering, Landscape Architecture & Land Surveying, PLLC
JMC Site Development Consultants, LLC
John Meyer Consulting, Inc.
120 BEDFORD ROAD • ARMONK, NY 10504
voice 914.273.5225 • fax 914.273.2102
www.jmcpllc.com

ANY ALTERATION OF PLANS, SPECIFICATIONS, PLATS AND REPORTS BEARING THE SEAL OF A LICENSED PROFESSIONAL ENGINEER OR LICENSED LAND SURVEYOR IS A VIOLATION OF SECTION 7209 OF THE NEW YORK STATE EDUCATION LAW, EXCEPT AS PROVIDED FOR BY SECTION 7209, SUBSECTION 2.

Drawn: TC Approved: DL/JS
Scale: NOT TO SCALE
Date: 12/03/2020
Project No: 18156
18156-COVER | COVER | COVER.scr
Drawing No: C–000

COPYRIGHT © 2020 by JMC All Rights Reserved. No part of this document may be reproduced, stored in a retrieval system, or transmitted in any form or by means, electronic, mechanical, photocopying, recording or otherwise, without the prior written permission of JMC PLANNING, ENGINEERING, LANDSCAPE ARCHITECTURE & LAND SURVEYING, PLLC | JMC SITE DEVELOPMENT CONSULTANTS, LLC | JOHN MEYER CONSULTING, INC. (JMC). Any modifications or alterations to this document without the written permission of JMC shall render them invalid and unusable.

NOT FOR CONSTRUCTION

Slopes Table				
Number	Minimum Slope	Maximum Slope	Area	Color
1	0.00%	10.00%	1028253.21	
2	10.00%	15.00%	217534.38	
3	15.00%	20.00%	130180.05	
4	20.00%	Vertical	157637.78	

TEST LOCATION LABELS LEGEND

- B-X — BORING LOCATION/DESIGNATION
- TP-X — TEST PIT LOCATION/DESIGNATION
- SW-X — STORMWATER TEST LOCATION/DESIGNATION
- TP-CX — CIVIL ENGINEER TEST PIT/INFILTRATION TEST LOCATION/DESIGNATION

TEST LOCATION LEGEND NOTES:

A. BORINGS, TEST PITS AND STORMWATER TESTS WERE PERFORMED BY CARLIN-SIMPSON AND ASSOCIATES. THE CIVIL ENGINEER TEST PITS/INFILTRATION TESTS WERE PERFORMED BY JMC, PLLC TO ACQUIRE INFORMATION FOR THE DESIGN OF THE PROPOSED ON SITE WASTEWATER TREATMENT SYSTEM.

LEGEND

- EXISTING PROPERTY LINE
- ADJACENT PROPERTY LINE
- EXISTING EASEMENT LINE
- EXISTING WETLAND LINE AND DELINEATION
- EXISTING BUILDING LINE
- EXISTING PAVEMENT EDGE
- EXISTING CURB LINE
- EXISTING CONTOUR
- EXISTING INDEX CONTOUR
- EXISTING STONE WALL
- EXISTING FENCE
- EXISTING TREE LINE
- EXISTING STORM DRAIN LINE AND SIZE
- EXISTING DOUBLE YELLOW PAINTED LINE
- EXISTING WHITE PAINTED LINE
- EXISTING FEATURE TO BE REMOVED
- EXISTING WATER LINE
- EXISTING GAS LINE
- EXISTING OVERHEAD WIRES
- EXISTING TELEPHONE LINES
- EXISTING DRAIN INLET
- EXISTING MANHOLE
- EXISTING FIRE HYDRANT
- EXISTING GAS VALVE
- EXISTING WATER VALVE
- EXISTING UTILITY POLE
- EXISTING SIGN
- PROPOSED LIMIT OF DISTURBANCE
- PROPOSED SAWCUT LINE

NOTES:

1. EXISTING CONDITIONS DEPICTED HEREON HAVE BEEN TAKEN FROM SURVEY TITLED, "TOPOGRAPHIC SURVEY OF PROPERTY," PREPARED BY JMC ENGINEERING, LANDSCAPE ARCHITECTURE & LAND SURVEYING, PLLC., LAST REVISED 10/29/2020. CONTRACTOR SHALL SATISFY HIM/HERSELF AS TO THE ACCURACY OF THE EXISTING INFORMATION SHOWN HEREON AND IDENTIFY ANY DISCREPANCIES PRIOR TO THE ISSUANCE OF A BID.
2. EXISTING WETLANDS WERE DELINEATED BY ECOLOGICAL SOLUTIONS, LLC IN ACCORDANCE WITH THE ARMY CORPS OF ENGINEERS (USACE) WETLANDS DELINEATION MANUAL (JANUARY 1987), ROUTINE DETERMINATION METHOD AND NORTHCENTRAL/NORTHEAST SUPPLEMENT. THE WETLANDS WERE DELINEATED ON MARCH 26, 2019 AS DESCRIBED IN THE REPORT ENTITLED "WETLAND DELINEATION", SEPTEMBER 21, 2020.
3. GEOTECHNICAL BORING/TEST PIT LOCATIONS DEPICTED ON THIS PLAN WERE TAKEN FROM THE GEOTECHNICAL REPORT ENTITLED, "REPORT ON SUBSURFACE SOIL AND FOUNDATION INVESTIGATION", DATED 10/14/2020, PREPARED BY CARLIN-SIMPSON AND ASSOCIATES, SUPPLEMENTED BY LOCATIONS OBSERVED BY JMC EMPLOYEES AND LOCATED USING GPS COORDINATES.
4. CONTRACTOR SHALL REFER TO GENERAL CONSTRUCTION NOTES ON DRAWING C-000 FOR ADDITIONAL DETAIL RELATED TO THE PROJECT SCOPE AND REQUIREMENTS FOR CONSTRUCTION.
5. THE CONTRACTOR SHALL VERIFY THE LOCATION OF EXISTING UTILITIES TO BE DEMOLISHED AND EXISTING UTILITIES TO BE PROTECTED. IF ANY DISCREPANCIES ARE FOUND, THE CONTRACTOR SHALL NOTIFY THE GENERAL CONTRACTOR AND JMC PRIOR TO THE START OF CONSTRUCTION.
6. PRIOR TO THE START OF ANY DEMOLITION THE CONTRACTOR SHALL OBTAIN ALL NECESSARY PERMITS AND/OR APPROVALS FROM THE TOWN OF NEWBURGH AND ALL OTHER AUTHORITIES HAVING JURISDICTION. CONTRACTOR SHALL PAY ALL OUTSTANDING FEES, CHARGES, AND DEPOSITS TO ACQUIRE SAID PERMITS. NO DEMOLITION SHALL COMMENCE UNTIL A PERMIT HAS BEEN OBTAINED FROM THE TOWN OF NEWBURGH.
7. ANY UNSUITABLE MATERIAL FOUND ON-SITE DURING CONSTRUCTION SHALL BE DISPOSED OF OFF-SITE IN A MANNER APPROVED BY ALL AUTHORITIES HAVING JURISDICTION AND REPLACED WITH SUITABLE MATERIAL AS REQUIRED. ALL REMOVAL AND REPLACEMENT OF UNSUITABLE MATERIAL SHALL BE COMPLETED UNDER THE DIRECT SUPERVISION OF A GEOTECHNICAL ENGINEER.
8. ALL DEMOLITION AND/OR CONSTRUCTION WITHIN THE RIGHT-OF-WAY, INCLUDING STREETS AND SIDEWALKS, SHALL BE PERFORMED IN ACCORDANCE WITH THE REQUIREMENTS AND CONDITIONS IMPOSED BY THE NEW YORK STATE DEPARTMENT OF TRANSPORTATION (NYSDOT) AND THE TOWN OF NEWBURGH AS APPLICABLE..
9. ALL CONSTRUCTION/DEMOLITION DEBRIS NOT PROPOSED TO BE RECYCLED SHALL BE REMOVED AND LEGALLY DISPOSED OF OFF-SITE IN ACCORDANCE WITH THE REGULATIONS OF ALL LOCAL, STATE AND FEDERAL AGENCIES HAVING JURISDICTION.
10. EXISTING CONCRETE MAY BE STORED ON SITE, AND RECYCLED FOR USE AS COMPACTED FILL. ALL MATERIAL TO BE USED AS FILL SHALL BE APPROVED BY THE PROJECT GEOTECHNICAL ENGINEER.
11. PRIOR TO THE START OF SITE DEMOLITION, EROSION AND SEDIMENT CONTROL DEVICES SHALL BE INSTALLED IN ACCORDANCE WITH THE NEW YORK STATE STANDARDS AND SPECIFICATIONS FOR EROSION AND SEDIMENT CONTROL, AS REQUIRED AND/OR DIRECTED BY THE TOWN OF NEWBURGH OR JMC.
12. EXISTING DRAINAGE PATTERNS ON SITE SHALL BE MAINTAINED TO THE MAXIMUM EXTENT PRACTICABLE.
13. ALL EXISTING UTILITY CASTINGS WHICH ARE TO REMAIN SHALL BE REMOVED AND RESET TO THE NEW PROPOSED GRADES IN ACCORDANCE WITH THE DIRECTIONS OF THE OWNER'S FIELD REPRESENTATIVE. EXISTING CASTINGS WHICH ARE DAMAGED OR UNFIT FOR INSTALLATION IN THE NEW CONSTRUCTION, AS DETERMINED BY THE OWNER'S FIELD REPRESENTATIVE, SHALL BE REPLACED.
14. ALL EXISTING SIDEWALKS, CURBS, PAVEMENT, ETC. TO REMAIN, WHICH ARE DISTURBED OR DAMAGED DUE TO THE NEW CONSTRUCTION, ARE TO BE REPLACED WITH MATERIALS CONSISTENT WITH EXISTING CONDITIONS.
15. THESE PLANS ARE TO BE PROVIDED TO BOTH THE DEMOLITION CONTRACTOR AND THE SITE CONTRACTOR FOR THEIR USE, INFORMATION AND COORDINATION. ANY QUESTIONS OF CONTRACTOR RESPONSIBILITY AND/OR SEPARATION OF WORK SHALL BE DIRECTED TO THE GENERAL CONTRACTOR IN WRITING PRIOR TO ISSUANCE OF BID.
16. THE OWNER SHALL RETAIN A LICENSED AND QUALIFIED PROFESSIONAL, CERTIFIED BY THE STATE OF NEW YORK, TO INSPECT FOR THE PRESENCE OF ASBESTOS AND/OR OTHER HAZARDOUS MATERIALS WITHIN DEMOLITION AREAS PRIOR TO THE COMMENCEMENT OF DEMOLITION. IF REMEDIATION IS REQUIRED, THE OWNER SHALL DO SO IN ACCORDANCE WITH THE NEW YORK STATE ASBESTOS RULES AND REGULATIONS AND/OR ANY AUTHORITIES HAVING JURISDICTION. THE CONTRACTOR SHALL PROVIDE ALL REQUIRED DOCUMENTATION TO THE TOWN OF NEWBURGH PRIOR TO OBTAINING A DEMOLITION PERMIT.
17. THE CONTRACTOR SHALL EXTERMINATE RODENTS AS REQUIRED BY THE ORANGE COUNTY DEPARTMENT OF HEALTH AND MENTAL HYGIENE. A LETTER FROM THE HEALTH DEPARTMENT CERTIFYING THAT A LICENSED EXTERMINATOR HAS TREATED THE EXISTING BUILDING SHALL BE PROVIDED TO THE TOWN OF NEWBURGH DEPARTMENT OF BUILDINGS.
18. PRIOR TO COMMENCEMENT OF DEMOLITION, THE CONTRACTOR MUST PROVIDE 24-HOUR NOTIFICATION TO THE TOWN OF NEWBURGH DEPARTMENT OF BUILDINGS.
19. THE CONTRACTOR SHALL PROVIDE VERIFICATION TO THE TOWN OF NEWBURGH DEPARTMENT OF BUILDINGS THAT FIVE (5) DAYS' PRIOR NOTIFICATION WAS GIVEN TO ALL ADJOINING OWNERS AND THAT NOTIFICATION WAS GIVEN TO THE APPROPRIATE COMMUNITY BOARD PRIOR TO THE COMMENCEMENT OF DEMOLITION.
20. STONES FROM FREESTANDING WALLS SHOWN HEREON TO BE REMOVED, SHALL BE STOCKPILED AS DIRECTED BY OWNER FOR FUTURE USE.

No.	Revision	Date	By

Previous Editions Obsolete

APPLICANT:

FARRELL BUILDING COMPANY
2317 MONTAUK HIGHWAY
BRIDGEHAMPTON, NY 11932

JMC Planning, Engineering, Landscape Architecture & Land Surveying, PLLC
JMC Site Development Consultants, LLC
John Meyer Consulting, Inc.
120 BEDFORD ROAD • ARMONK, NY 10504
voice 914.273.5225 • fax 914.273.2102
www.jmcpllc.com

EXISTING CONDITIONS MAP AND SITE REMOVALS PLAN

FARRELL INDUSTRIAL PARK
ROUTE 300
TOWN OF NEWBURGH, NY

ANY ALTERATION OF PLANS, SPECIFICATIONS, PLATS AND REPORTS BEARING THE SEAL OF A LICENSED PROFESSIONAL ENGINEER OR LICENSED LAND SURVEYOR IS A VIOLATION OF SECTION 7209 OF THE NEW YORK STATE EDUCATION LAW, EXCEPT AS PROVIDED FOR BY SECTION 7209, SUBSECTION 2.

Drawn:	DK
Approved:	DL/AS
Scale:	1" = 50'
Date:	12/03/2020
Project No:	18156
18156-BASE	EXIST
EXIST.scr	
Drawing No:	C-010

NOT FOR CONSTRUCTION

COPYRIGHT © 2019 by JMC All Rights Reserved. No part of this document may be reproduced, stored in a retrieval system, or transmitted in any form or by means, electronic, mechanical, photocopying, recording or otherwise, without the prior written permission of JMC PLANNING, ENGINEERING, LANDSCAPE ARCHITECTURE & LAND SURVEYING, PLLC | JMC SITE DEVELOPMENT CONSULTANTS, LLC | JOHN MEYER CONSULTING, INC. (JMC). Any modifications or alterations to this document without the written permission of JMC shall render them invalid and unusable.

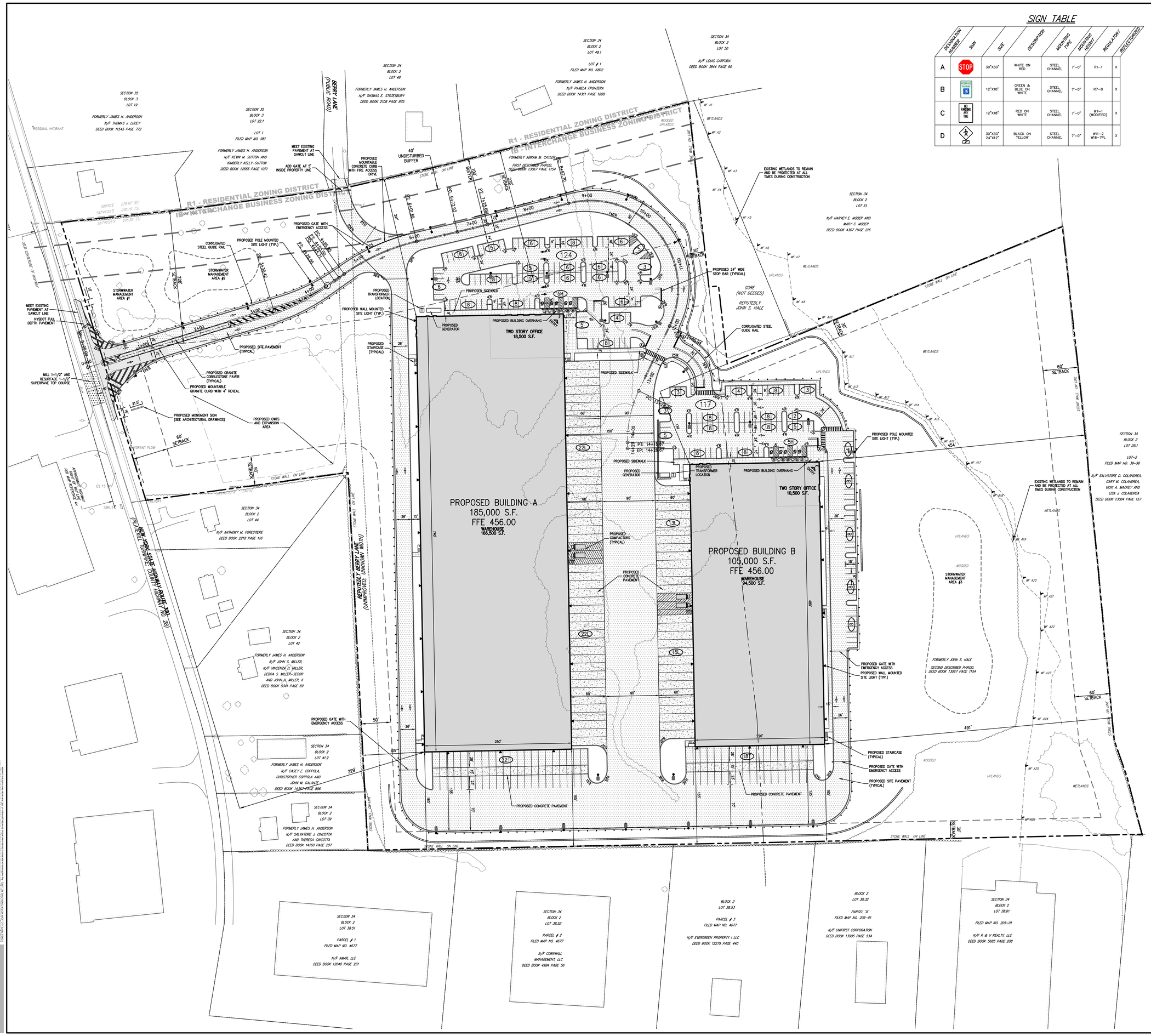

SIGN TABLE

DESIGNATION NUMBER	SIGN	SIZE	DESCRIPTION	MOUNTING TYPE	MOUNTING HEIGHT	REGULATORY	REFLECTORIZED
A	STOP	30"x30"	WHITE ON RED	STEEL CHANNEL	7'-0"	R1-1	X
B	RESERVED PARKING	12"x18"	GREEN & BLUE ON WHITE	STEEL CHANNEL	7'-0"	R7-8	X
C	NO PARKING ANY TIME	12"x18"	RED ON WHITE	STEEL CHANNEL	7'-0"	R7-1 (MODIFIED)	X
D		30"x30" 24"x12"	BLACK ON YELLOW	STEEL CHANNEL	7'-0"	W11-2 W16-7PL	X

LEGEND

- EXISTING PROPERTY LINE
- ADJACENT PROPERTY LINE
- EXISTING SETBACK LINE
- EXISTING WETLAND LINE AND DELINEATION (WLF-43, WLF-44, WLF-45)
- EXISTING BUILDING LINE
- EXISTING PAVEMENT EDGE
- EXISTING CURB LINE
- EXISTING STONE WALL
- EXISTING GUIDE RAIL
- EXISTING FENCE
- EXISTING UTILITY POLE
- EXISTING SIGN
- PROPOSED BUILDING LINE
- PROPOSED CONCRETE CURB
- PROPOSED PARKING SPACES WITH NUMBER OF SPACES INDICATED (REFER TO STRIPING DETAILS)
- PROPOSED CONCRETE SIDEWALK
- PROPOSED SITE PAVEMENT
- NYSDOT FULL DEPTH PAVEMENT
- PROPOSED CONCRETE PAVEMENT
- PROPOSED 2-4" WIDE YELLOW LINES 8" O.C.
- PROPOSED 24" WIDE WHITE STOP LINE
- PROPOSED ARROW MARKING ON PAVEMENT
- PROPOSED DIRECTIONAL FLOW ARROWS (NOT PAVEMENT MARKINGS)
- TRAFFIC SIGN LOCATION & DESIGNATION

NOTES:

1. EXISTING CONDITIONS DEPICTED HEREON HAVE BEEN TAKEN FROM SURVEY TITLED, "TOPOGRAPHIC SURVEY OF PROPERTY", PREPARED BY JMC ENGINEERING, LANDSCAPE ARCHITECTURE & LAND SURVEYING, PLLC, LAST REVISED 10/29/2020. CONTRACTOR SHALL SATISFY HIM/HERSELF AS TO THE ACCURACY OF THE EXISTING INFORMATION SHOWN HEREON AND IDENTIFY ANY DISCREPANCIES PRIOR TO THE ISSUANCE OF A BID.
2. EXISTING WETLANDS WERE DELINEATED BY ECOLOGICAL SOLUTIONS, LLC IN ACCORDANCE WITH THE ARMY CORPS OF ENGINEERS (USACE) WETLANDS DELINEATION MANUAL (JANUARY 1987), ROUTINE DETERMINATION METHOD AND NORTHCENTRAL/NORTHEAST SUPPLEMENT. THE WETLANDS WERE DELINEATED ON MARCH 26, 2019 AS DESCRIBED IN THE REPORT ENTITLED "WETLAND DELINEATION", SEPTEMBER 21, 2020.

No.	Revision	Date	By

Previous Editions Obsolete

APPLICANT:
FARRELL BUILDING COMPANY
237 WYNKOOP STREET
HAMPTON, NY 11932

JMC Planning, Engineering, Landscape Architecture & Land Surveying, PLLC
JMC Site Development Consultants, LLC
John Meyer Consulting, Inc.
120 BEDFORD ROAD - armonk, ny 10504
voice 914.273.5225 • fax 914.273.2102
www.jmcpllc.com

LAYOUT PLAN

FARRELL INDUSTRIAL PARK
ROUTE 300
TOWN OF NEWBURGH, NY

ANY ALTERATION OF PLANS, SPECIFICATIONS, PLATS AND REPORTS BEARING THE SEAL OF A LICENSED PROFESSIONAL ENGINEER OR LICENSED LAND SURVEYOR IS A VIOLATION OF SECTION 7209 OF THE NEW YORK STATE EDUCATION LAW, EXCEPT AS PROVIDED FOR BY SECTION 7209, SUBSECTION 2.

Drawn:	TC
Approved:	DL/JS
Scale:	1" = 50'
Date:	12/03/2020
Project No:	18156
18156-LAYOUT	LAYOUT LAY.scr
Drawing No:	C-100

NOT FOR CONSTRUCTION

COPYRIGHT © 2020 by JMC All Rights Reserved. No part of this document may be reproduced, stored in a retrieval system, or transmitted in any form or by means, electronic, mechanical, photocopying, recording or otherwise, without the prior written permission of JMC PLANNING, ENGINEERING, LANDSCAPE ARCHITECTURE & LAND SURVEYING, PLLC | JOHN MEYER CONSULTING, INC. JMC. Any modifications or alterations to this document without a written permission of JMC shall render them invalid and unusable.

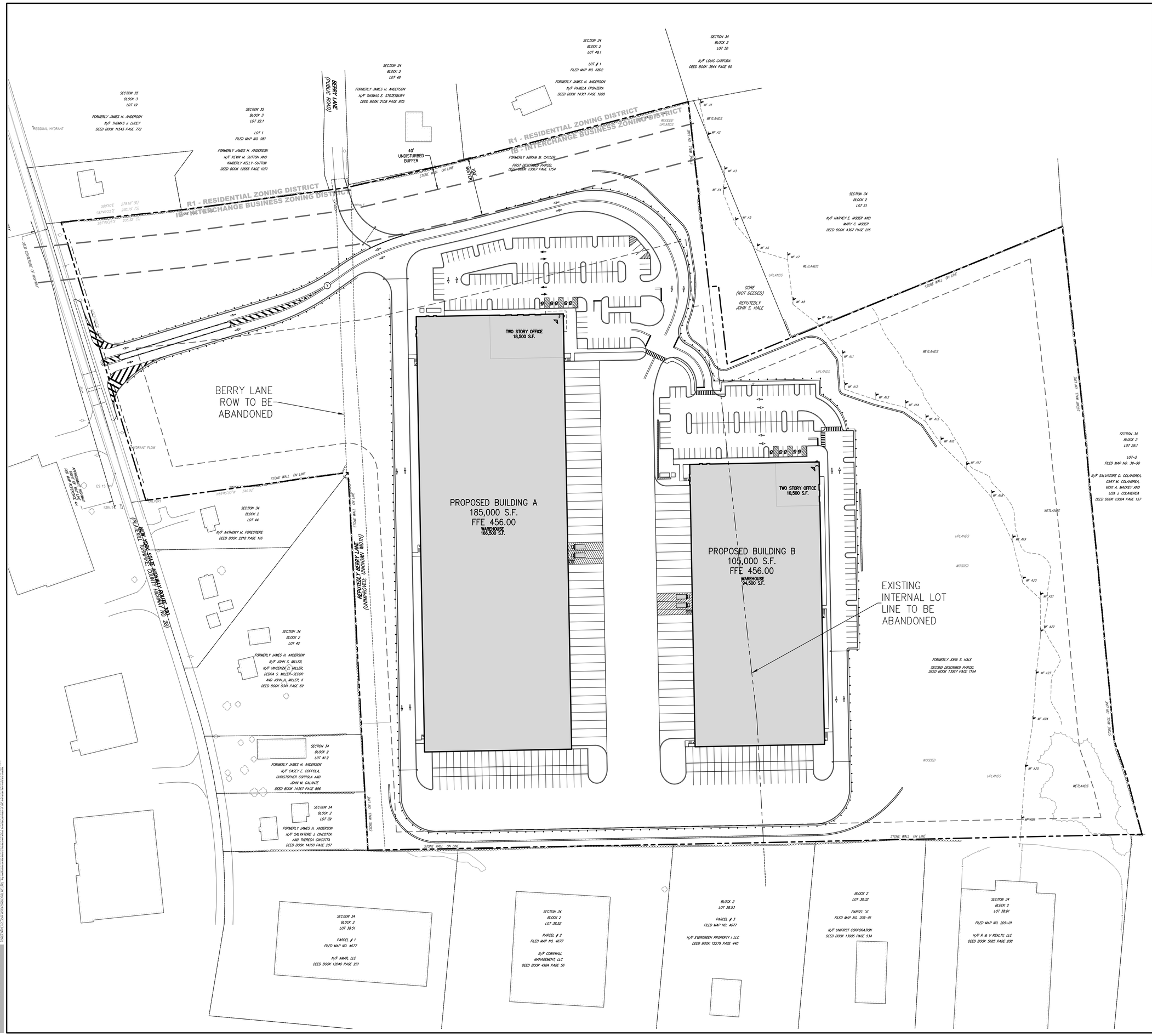

LEGEND

- EXISTING PROPERTY LINE
- ADJACENT PROPERTY LINE
- EXISTING SETBACK LINE
- WF-63 WF-64 WF-65 EXISTING WETLAND LINE AND DELINEATION
- EXISTING BUILDING LINE
- EXISTING PAVEMENT EDGE
- EXISTING CURB LINE
- EXISTING STONE WALL
- EXISTING GUIDE RAIL
- EXISTING FENCE
- EXISTING UTILITY POLE
- EXISTING SIGN
- PROPOSED BUILDING LINE
- PROPOSED CONCRETE CURB
- (5) PROPOSED PARKING SPACES WITH NUMBER OF SPACES INDICATED (REFER TO STRIPING DETAILS)
- PROPOSED CONCRETE SIDEWALK
- PROPOSED SITE PAVEMENT
- PROPOSED CONCRETE PAVEMENT
- (Y) PROPOSED 2-4" WIDE YELLOW LINES 8" O.C.
- PROPOSED 24" WIDE WHITE STOP LINE
- PROPOSED ARROW MARKING ON PAVEMENT
- PROPOSED DIRECTIONAL FLOW ARROWS (NOT PAVEMENT MARKINGS)
- (A) TRAFFIC SIGN LOCATION & DESIGNATION

NOTES:

1. EXISTING CONDITIONS DEPICTED HEREON HAVE BEEN TAKEN FROM SURVEY TITLED, "TOPOGRAPHIC SURVEY OF PROPERTY," PREPARED BY JMC ENGINEERING, LANDSCAPE ARCHITECTURE & LAND SURVEYING, PLLC, LAST REVISED 10/29/2020. CONTRACTOR SHALL SATISFY HIM/HERSELF AS TO THE ACCURACY OF THE EXISTING INFORMATION SHOWN HEREON AND IDENTIFY ANY DISCREPANCIES PRIOR TO THE ISSUANCE OF A BID.
2. THIS PLAN IS PROVIDED FOR INFORMATIONAL PURPOSES ONLY. THE SITE PRESENTLY CONSISTS OF A SINGLE TAX LOT THAT INCLUDES TWO PARCELS. THE TWO PARCELS WILL BE MERGED AT THE APPROPRIATE TIME THROUGH THE OFFICE OF THE TAX ASSESSOR.

No.	Revision	Date	By

Previous Editions Obsolete

APPLICANT:
FARRELL BUILDING COMPANY
237 MONTAUK HIGHWAY
BRIDGEHAMPTON, NY 11932

JMC Planning, Engineering, Landscape Architecture & Land Surveying, PLLC
JMC Site Development Consultants, LLC
John Meyer Consulting, Inc.
120 BEDFORD ROAD - ARMONK, NY 10504
voice 914.273.5225 • fax 914.273.2102
www.jmcpllc.com

PRELIMINARY LOT CONSOLIDATION & SUBDIVISION PLAN

FARRELL INDUSTRIAL PARK
ROUTE 300
TOWN OF NEWBURGH, NY

ANY ALTERATION OF PLANS, SPECIFICATIONS, PLATS AND REPORTS BEARING THE SEAL OF A LICENSED PROFESSIONAL ENGINEER OR LICENSED LAND SURVEYOR IS A VIOLATION OF SECTION 7209 OF THE NEW YORK STATE EDUCATION LAW, EXCEPT AS PROVIDED FOR BY SECTION 7209, SUBSECTION 2.

Drawn:	TC
Approved:	DL/AS
Scale:	1" = 50'
Date:	12/03/2020
Project No:	18156
18156-LAYOUT	SUBDIVISION	LAY.scr
Drawing No:	C-110

NOT FOR CONSTRUCTION

COPYRIGHT © 2019 by JMC All Rights Reserved. No part of this document may be reproduced, stored in a retrieval system, or transmitted in any form or by means, electronic, mechanical, photocopying, recording or otherwise, without the prior written permission of JMC PLANNING, ENGINEERING, LANDSCAPE ARCHITECTURE & LAND SURVEYING, PLLC | JMC SITE DEVELOPMENT CONSULTANTS, LLC | JOHN MEYER CONSULTING, INC. (JMC). Any modifications or alterations to this document without the written permission of JMC shall render them invalid and unusable.

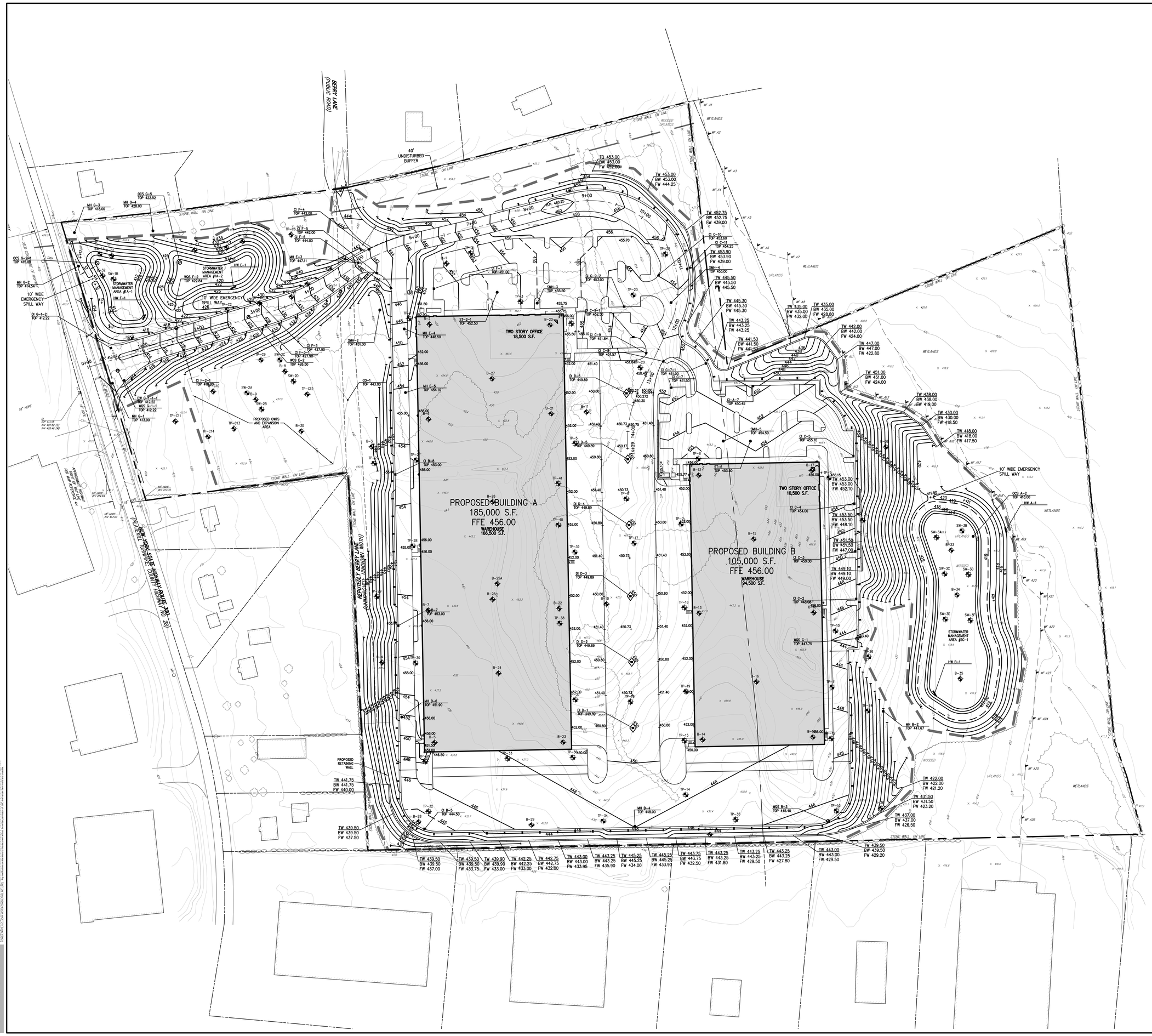

LEGEND

- EXISTING PROPERTY LINE
- ADJACENT PROPERTY LINE
- EXISTING EASEMENT LINE
- EXISTING WETLAND LINE AND DELINEATION
- EXISTING BUILDING LINE
- EXISTING PAVEMENT EDGE
- EXISTING CURB LINE
- EXISTING CONTOUR
- EXISTING INDEX CONTOUR
- EXISTING STONE WALL
- EXISTING FENCE
- EXISTING DRAIN INLET
- EXISTING MANHOLE
- EXISTING FIRE HYDRANT
- EXISTING UTILITY POLE
- EXISTING SIGN
- PROPOSED BUILDING LINE
- PROPOSED CONCRETE CURB
- PROPOSED CONCRETE SIDEWALK
- PROPOSED FINISHED GRADE
- PROPOSED SPOT GRADE
- PROPOSED TYPE CI DRAIN INLET
- PROPOSED TYPE DI DRAIN INLET
- PROPOSED RETAINING WALL WITH 4FT. SAFETY FENCE (DESIGN BY OTHERS)
- PROPOSED TEST LOCATIONS

NOTES:

1. EXISTING CONDITIONS DEPICTED HEREON HAVE BEEN TAKEN FROM SURVEY TITLED, "TOPOGRAPHIC SURVEY OF PROPERTY," PREPARED BY JMC ENGINEERING, LANDSCAPE ARCHITECTURE & LAND SURVEYING, PLLC., LAST REVISED 10/29/2020. CONTRACTOR SHALL SATISFY HIM/HERSELF AS TO THE ACCURACY OF THE EXISTING INFORMATION SHOWN HEREON AND IDENTIFY ANY DISCREPANCIES PRIOR TO THE ISSUANCE OF A BID.
2. EXISTING WETLANDS WERE DELINEATED BY ECOLOGICAL SOLUTIONS, LLC IN ACCORDANCE WITH THE ARMY CORPS OF ENGINEERS (USACE) WETLANDS DELINEATION MANUAL (JANUARY 1987), ROUTINE DETERMINATION METHOD AND NORTHCENTRAL/NORTHEAST SUPPLEMENT. THE WETLANDS WERE DELINEATED ON MARCH 26, 2019 AS DESCRIBED IN THE REPORT ENTITLED "WETLAND DELINEATION", SEPTEMBER 21, 2020.
3. GEOTECHNICAL BORING/TEST PIT LOCATIONS DEPICTED ON THIS PLAN WERE TAKEN FROM THE GEOTECHNICAL REPORT ENTITLED, "REPORT ON SUBSURFACE SOIL AND FOUNDATION INVESTIGATION", DATED 10/14/2020, PREPARED BY CARLIN–SIMPSON AND ASSOCIATES, SUPPLEMENTED BY LOCATIONS OBSERVED BY JMC EMPLOYEES AND LOCATED USING GPS COORDINATES.

TEST LOCATION LABELS LEGEND

- B–X — BORING LOCATION/DESIGNATION
- TP–X — TEST PIT LOCATION/DESIGNATION
- SW–X — STORMWATER TEST LOCATION/DESIGNATION
- TP–CX — CIVIL ENGINEER TEST PIT/INFILTRATION TEST LOCATION/DESIGNATION

TEST LOCATION LEGEND NOTES:

A. BORINGS, TEST PITS AND STORMWATER TESTS WERE PERFORMED BY CARLIN–SIMPSON AND ASSOCIATES. THE CIVIL ENGINEER TEST PITS/INFILTRATION TESTS WERE PERFORMED BY JMC, PLLC TO ACQUIRE INFORMATION FOR THE DESIGN OF THE PROPOSED ON SITE WASTEWATER TREATMENT SYSTEM.

(PROPOSED GRADE) TW BW FW (PROPOSED GRADE)

RETAINING WALL SPOT GRADE LEGEND

No.	Revision	Date	By

Previous Editions Obsolete

APPLICANT:

FARRELL BUILDING COMPANY
237 WYNDHAM AVENUE
BRIDGEHAMPTON, NY 11932

JMC Planning, Engineering, Landscape Architecture & Land Surveying, PLLC
JMC Site Development Consultants, LLC
John Meyer Consulting, Inc.
120 BEDFORD ROAD • ARMONK, NY 10504
voice 914.273.5225 • fax 914.273.2102
www.jmcpllc.com

GRADING PLAN

FARRELL INDUSTRIAL PARK
ROUTE 300
TOWN OF NEWBURGH, NY

ANY ALTERATION OF PLANS, SPECIFICATIONS, PLATS AND REPORTS BEARING THE SEAL OF A LICENSED PROFESSIONAL ENGINEER OR LICENSED LAND SURVEYOR IS A VIOLATION OF SECTION 7209 OF THE NEW YORK STATE EDUCATION LAW, EXCEPT AS PROVIDED FOR BY SECTION 7209, SUBSECTION 2.

Drawn:	DK
Approved:	DL/JS
Scale:	1" = 50'
Date:	12/03/2020
Project No:	18156
18156-GRAD	GRAD / GRAD.scr
Drawing No:	C–200

NOT FOR CONSTRUCTION

COPYRIGHT © 2019 by JMC All Rights Reserved. No part of this document may be reproduced, stored in a retrieval system, or transmitted in any form or by means, electronic, mechanical, photocopying, recording or otherwise, without the prior written permission of JMC PLANNING, ENGINEERING, LANDSCAPE ARCHITECTURE & LAND SURVEYING, PLLC (JMC). Any modifications or alterations to this document without the written permission of JMC shall render them invalid and unusable.

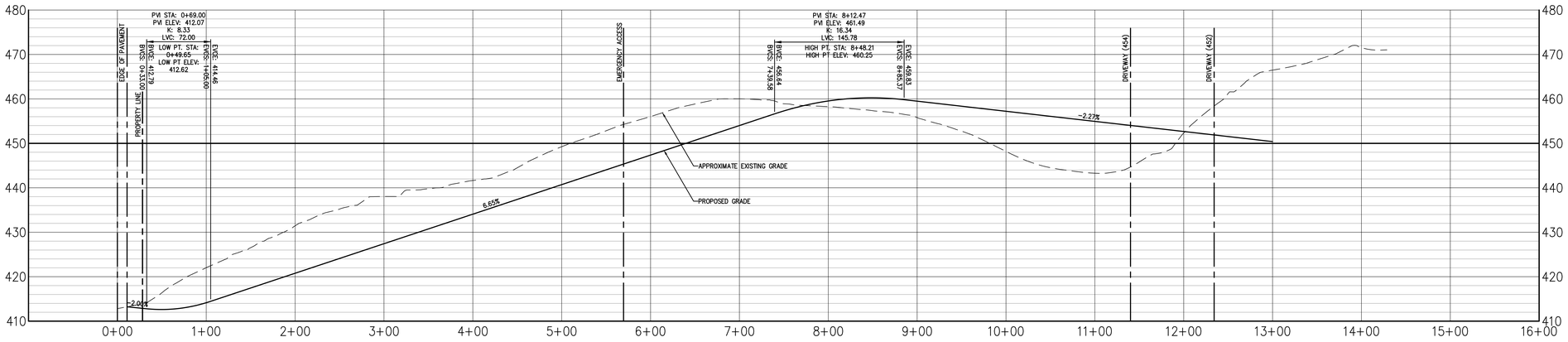

DRIVEWAY PROFILE

NOT FOR CONSTRUCTION

COPYRIGHT © 2019 by JMC All rights Reserved. No part of this document may be reproduced, stored in a retrieval system, or transmitted in any form or by means, electronic, mechanical, photocopying, recording or otherwise, without the prior written permission of JMC PLANNING, ENGINEERING, LANDSCAPE ARCHITECTURE & LAND SURVEYING, PLLC | JMC SITE DEVELOPMENT CONSULTANTS, LLC | JOHN MEYER CONSULTING, INC. (JMC). Any modifications or alterations to this document without the written permission of JMC shall render them invalid and unusable.

JMC Planning, Engineering, Landscape Architecture & Land Surveying, PLLC
JMC Site Development Consultants, LLC
John Meyer Consulting, Inc.
120 BEDFORD ROAD • ARMONK, NY 10504
voice 914.273.5225 • fax 914.273.2102
www.jmcpllc.com

No.	Revision	Date	By

Previous Editions Obsolete

APPLICANT:
FARRELL BUILDING COMPANY
2537 VAIL AVENUE
BRIDGEHAMPTON, NY 11932

DRIVEWAY PROFILE

FARRELL INDUSTRIAL PARK
ROUTE 300
TOWN OF NEWBURGH, NY

ANY ALTERATION OF PLANS, SPECIFICATIONS, PLATS AND REPORTS BEARING THE SEAL OF A LICENSED PROFESSIONAL ENGINEER OR LICENSED LAND SURVEYOR IS A VIOLATION OF SECTION 7209 OF THE NEW YORK STATE EDUCATION LAW, EXCEPT AS PROVIDED FOR BY SECTION 7209, SUBSECTION 2.

Drawn:	TC
Approved:	DL/JS
Scale:	H:1" = 50'/V:1" = 10'
Date:	12/03/2020
Project No:	18156
18156-GND	PROFILE	GRAD.scr
Drawing No:	C-210

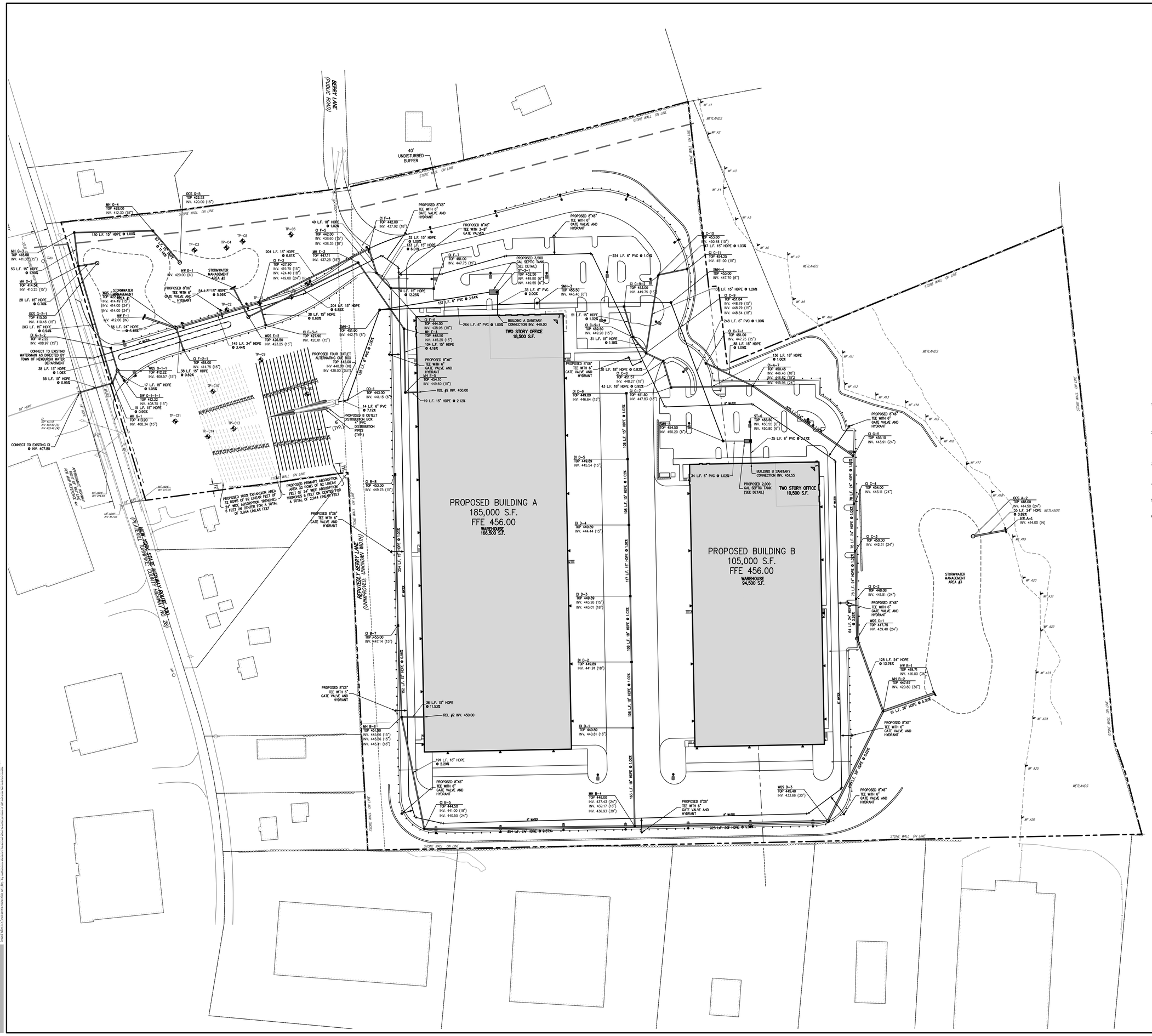

LEGEND

- EXISTING PROPERTY LINE
- ADJACENT PROPERTY LINE
- EXISTING EASEMENT LINE
- EXISTING WETLAND LINE AND DELINEATION
- EXISTING BUILDING LINE
- EXISTING PAVEMENT EDGE
- EXISTING CURB LINE
- EXISTING STONE WALL
- EXISTING RETAINING WALL
- EXISTING GUIDE RAIL
- EXISTING FENCE
- EXISTING STORM DRAIN LINE AND SIZE
- EXISTING SANITARY LINE AND SIZE
- EXISTING DRAIN INLET
- EXISTING MANHOLE
- EXISTING FIRE HYDRANT
- EXISTING GAS VALVE
- EXISTING WATER VALVE
- EXISTING UTILITY POLE
- EXISTING LIGHT POLE
- EXISTING SIGN
- PROPOSED BUILDING LINE
- PROPOSED CONCRETE CURB
- PROPOSED CONCRETE SIDEWALK
- PROPOSED SANITARY SEWER MANHOLE
- PROPOSED STORM DRAIN MANHOLE
- PROPOSED TYPE CI DRAIN INLET
- PROPOSED TYPE DI DRAIN INLET
- PROPOSED HEADWALL
- PROPOSED WATER QUALITY STRUCTURE
- PROPOSED SUBSURFACE DRAINAGE OUTLET CONTROL STRUCTURE
- PROPOSED OUTLET CONTROL STRUCTURE
- PROPOSED CLEANOUT
- PROPOSED HYDRANT
- 15" HDPE — PROPOSED STORM DRAIN LINE & SIZE
- 8" PVC — PROPOSED SANITARY SEWER LINE & SIZE
- 6" WATER — PROPOSED WATER LINE & SIZE
- PROPOSED WATER VALVE
- PROPOSED RETAINING WALL (DESIGN BY OTHERS)

NOTES:

1. EXISTING CONDITIONS DEPICTED HEREON HAVE BEEN TAKEN FROM SURVEY TITLED, "TOPOGRAPHIC SURVEY OF PROPERTY," PREPARED BY JMC ENGINEERING, LANDSCAPE ARCHITECTURE & LAND SURVEYING, PLLC., LAST REVISED 10/29/2020. CONTRACTOR SHALL SATISFY HIMVHERSELF AS TO THE ACCURACY OF THE EXISTING INFORMATION SHOWN HEREON AND IDENTIFY ANY DISCREPANCIES PRIOR TO THE ISSUANCE OF A BID.
2. ALL STORMWATER MANAGEMENT PRACTICES SHALL REMAIN UNDISTURBED AND BE PROTECTED FROM HEAVY MACHINERY TRAFFIC DURING CONSTRUCTION. HOWEVER DURING CONSTRUCTION OF THE PRACTICE THE CONTRACTOR SHALL MINIMIZE AND AVOID HEAVY MACHINERY TRAFFIC TO THE MAXIMUM EXTENT PRACTICABLE. THERE SHALL BE NO STORAGE OF MATERIALS WITHIN AREAS TO BE USED FOR STORMWATER MANAGEMENT PRACTICES. THE CONTRACTOR SHALL INSTALL CONSTRUCTION FENCE AROUND THE PRACTICE TO DISCOURAGE VEHICLE TRAFFIC.
3. UNLESS OTHERWISE SPECIFIED, PIPE FOR STORM DRAINS SHALL BE HIGH DENSITY POLYETHYLENE PIPE (HDPE) WITH A SMOOTH INTERIOR AND ANNULAR EXTERIOR CORRUGATIONS IN ACCORDANCE WITH ASTM F-2648. JOINTS SHALL BE WATERTIGHT IN ACCORDANCE WITH ASTM D-3212.
4. UNLESS OTHERWISE SPECIFIED, PIPE FOR SANITARY SEWER GRAVITY LINES SHALL BE POLYVINYL CHLORIDE PIPE (PVCP), SDR-35, WITH PUSH-ON JOINTS IN ACCORDANCE WITH ASTM D-3034 AND D-3212.
5. UNLESS OTHERWISE SPECIFIED, PIPE FOR WATER LINES SHALL BE DOUBLE CEMENT-LINED DUCTILE IRON PIPE (DIP), CLASS 52, WITH MECHANICAL JOINTS IN ACCORDANCE WITH AWWA C-150, C-151, C-104 AND C-111.
6. ELECTRIC, TELEPHONE, FIRE ALARM AND CABLE TELEVISION LINES SHALL BE INSTALLED UNDERGROUND IN CONDUIT IN ACCORDANCE WITH THE REQUIREMENTS OF THE UTILITY COMPANY HAVING JURISDICTION.

No.	Revision	Date	By

Previous Editions Obsolete

APPLICANT:

FARRELL BUILDING COMPANY
237 DUTCHMAN'S LANE
BRIDGEHAMPTON, NY 11932

JMC Planning, Engineering, Landscape Architecture & Land Surveying, PLLC
JMC Site Development Consultants, LLC
John Meyer Consulting, Inc.
120 BEDFORD ROAD • ARMONK, NY 10504
voice 914.273.5225 • fax 914.273.2102
www.jmcpllc.com

UTILITIES PLAN

FARRELL INDUSTRIAL PARK
ROUTE 300
TOWN OF NEWBURGH, NY

ANY ALTERATION OF PLANS, SPECIFICATIONS, PLATS AND REPORTS BEARING THE SEAL OF A LICENSED PROFESSIONAL ENGINEER OR LICENSED LAND SURVEYOR IS A VIOLATION OF SECTION 7209 OF THE NEW YORK STATE EDUCATION LAW, EXCEPT AS PROVIDED FOR BY SECTION 7209, SUBSECTION 2.

Drawn:	TC	Approved:	DL/JS
Scale:	1" = 50'		
Date:	12/03/2020		
Project No:	18156		
18156-UTIL	UTIL	UTIL.scr	
Drawing No:	C-300		

NOT FOR CONSTRUCTION

COPYRIGHT © 2021 by JMC All Rights Reserved. No part of this document may be reproduced, stored in a retrieval system, or transmitted in any form or by means, electronic, mechanical, photocopying, recording or otherwise, without the prior written permission of JMC PLANNING, ENGINEERING, LANDSCAPE ARCHITECTURE & LAND SURVEYING, PLLC | JMC SITE DEVELOPMENT CONSULTANTS, LLC | JOHN MEYER CONSULTING, INC. Any modifications or alterations to this document without the written permission of JMC shall render them invalid and unusable.

SITE PLAN
1" = 80'

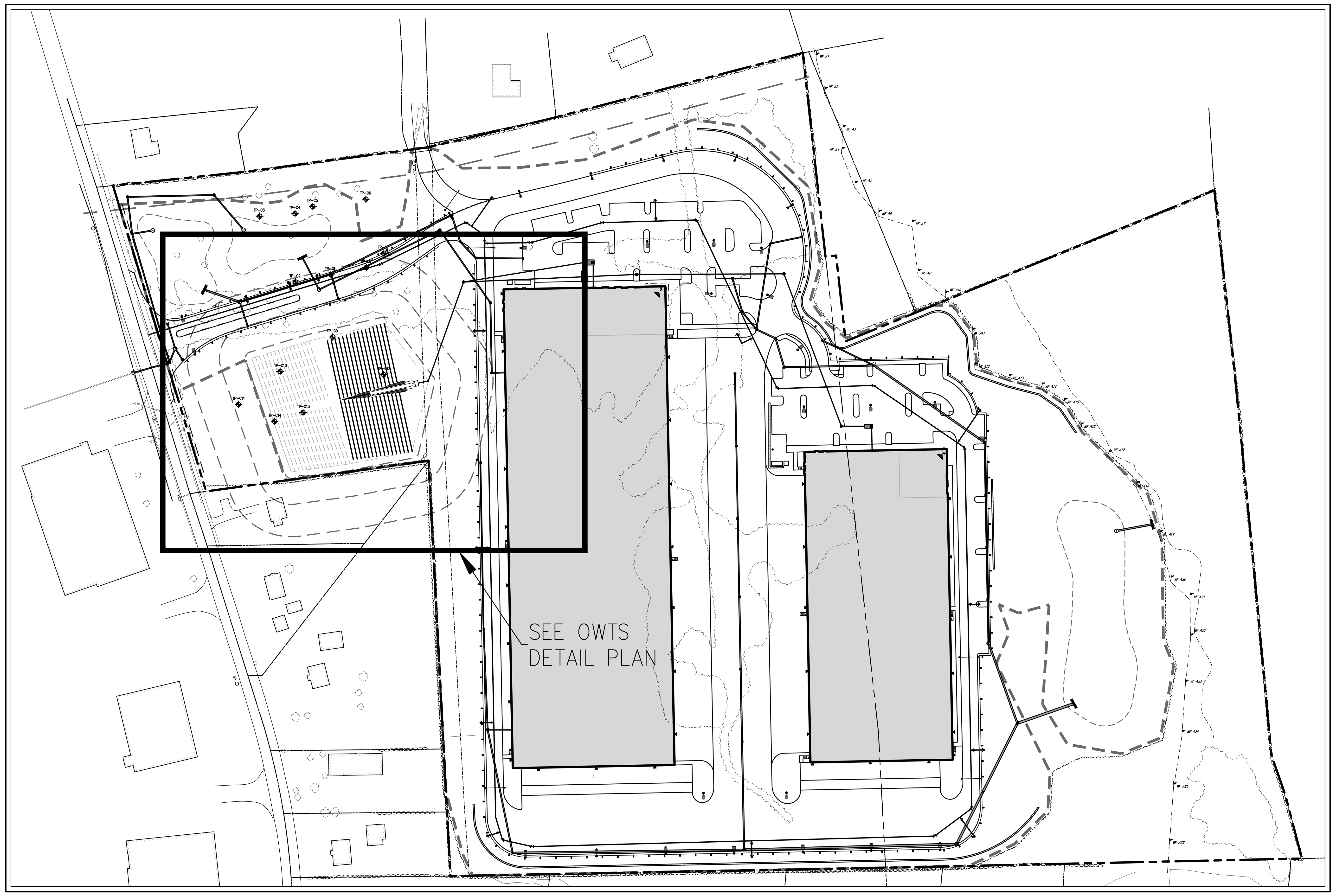

OWTS DETAIL PLAN
1" = 30'

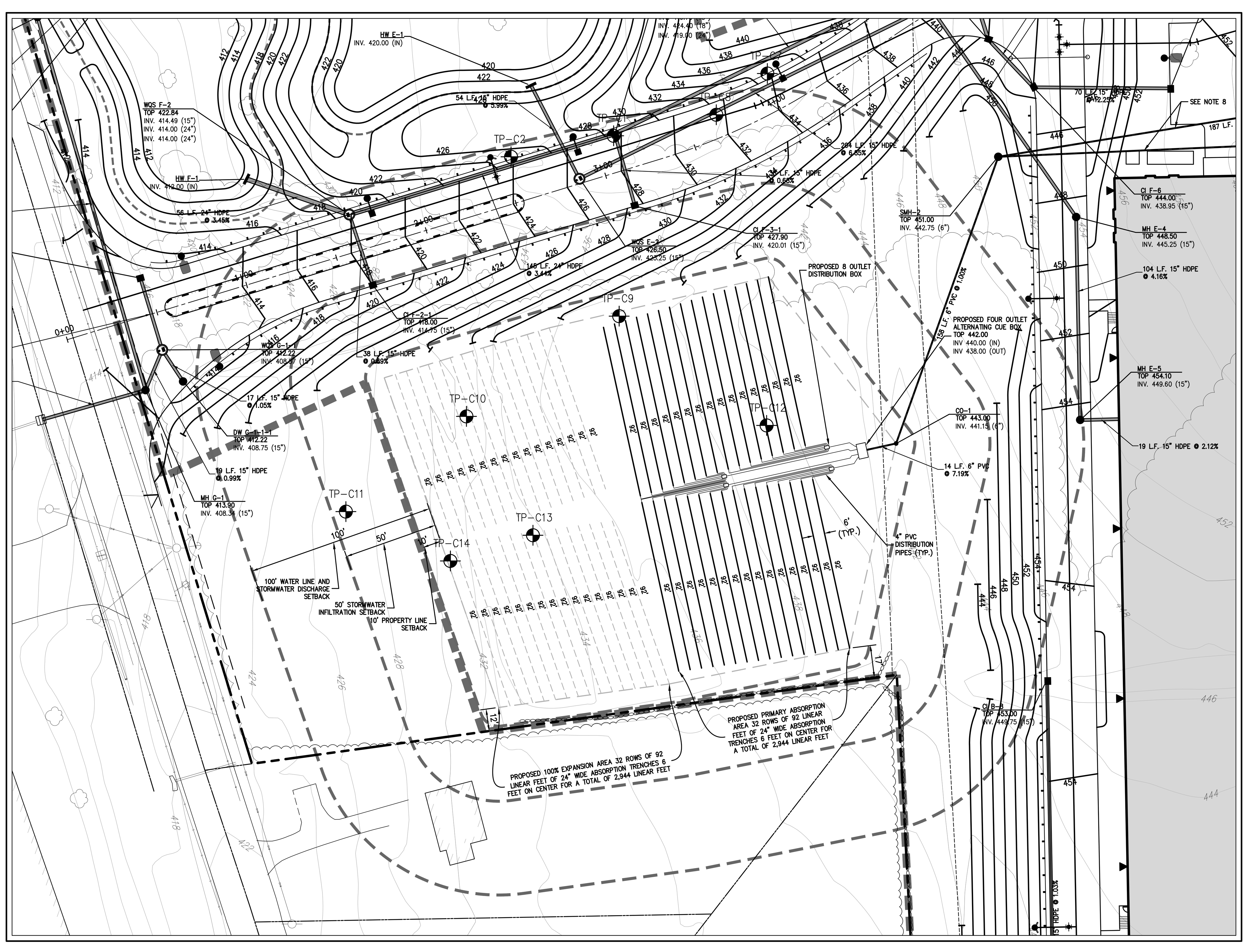

PERCOLATION TESTING DATA TABLE

TEST PIT NO.	DATE TESTED	TEST PIT DESCRIPTION	PERCOLATION RATE (MIN/IN)	GROUNDWATER PRESENT (Y/N)	DEPTH FROM GRADE	PRESOAKED? (Y/N)	DIAMETER OF HOLE
TP-C1	10/20/2020	LIGHT BROWN SANDY SILT	25.00	NO	24"	NO	6"
TP-C2	10/20/2020	LIGHT BROWN SANDY SILT	18.33	NO	24"	NO	6"
TP-C3	10/20/2020	LIGHT BROWN SANDY SILT	23.33	NO	24"	NO	6"
TP-C4	10/20/2020	LIGHT BROWN SANDY SILT	30.00	NO	24"	NO	6"
TP-C5	10/20/2020	LIGHT BROWN SANDY SILT	7.50	NO	24"	NO	6"
TP-C6	10/20/2020	LIGHT BROWN SANDY SILT	7.36	NO	24"	NO	6"
TP-C7	10/20/2020	LIGHT BROWN SANDY SILT	33.33	NO	24"	NO	6"
TP-C8	10/20/2020	LIGHT BROWN SANDY SILT	50.00	NO	24"	NO	6"
TP-C9	10/26/2020	LIGHT BROWN SANDY SILT	6.16	NO	24"	NO	6"
TP-C10	10/26/2020	LIGHT BROWN SANDY SILT	8.33	NO	24"	NO	6"
TP-C11	10/26/2020	LIGHT BROWN SANDY SILT	6.50	NO	24"	NO	6"
TP-C12	10/26/2020	LIGHT BROWN SANDY SILT	6.00	NO	24"	NO	6"
TP-C13	10/26/2020	LIGHT BROWN SANDY SILT	11.67	NO	24"	NO	6"
TP-C14	10/26/2020	LIGHT BROWN SANDY SILT	18.33	NO	24"	NO	6"

DEEP HOLE TESTING DATA TABLE

TEST PIT NO.	DATE TESTED	TEST PIT DESCRIPTION	DEPTH ACHEIVED	GROUNDWATER PRESENT (Y/N)	DEPTH TO ROCK	MOTTLING (Y/N)
TP-C1	10/20/2020	0"-8" TOPSOIL 8"-96" LIGHT BROWN SANDY SILT	96"	NO	N/A	N
TP-C2	10/20/2020	0"-8" TOPSOIL 8"-96" LIGHT BROWN SANDY SILT	96"	NO	N/A	N
TP-C3	10/20/2020	0"-8" TOPSOIL 8"-96" LIGHT BROWN SANDY SILT	96"	NO	N/A	N
TP-C4	10/20/2020	0"-8" TOPSOIL 8"-96" LIGHT BROWN SANDY SILT	96"	NO	N/A	N
TP-C5	10/20/2020	0"-8" TOPSOIL 8"-96" LIGHT BROWN SANDY SILT	96"	NO	N/A	N
TP-C6	10/20/2020	0"-8" TOPSOIL 8"-96" LIGHT BROWN SANDY SILT	96"	NO	N/A	N
TP-C7	10/20/2020	0"-8" TOPSOIL 8"-96" LIGHT BROWN SANDY SILT	96"	NO	N/A	N
TP-C8	10/20/2020	0"-8" TOPSOIL 8"-96" LIGHT BROWN SANDY SILT	96"	NO	N/A	N

MININAL HORIZONTAL SEPARATION DISTANCES (IN FEET)

EXISTING FEATURE	WATERTIGHT SEPTIC TANK	SEWER LINE	ABSORPTION FIELD
DRILLED WELL-PUBLIC WATER SYSTEM	100	50	200
WATER LINE (PRESSURE)	10	10	10
STORMWATER INFILTRATION MANAGEMENT PRACTICE	25	25	50
CATCH BASIN	25	N/A	50
FOUNDATION	10	N/A	20
PROPERTY LINE	10	10	10
SWALE	N/A	N/A	25

TEST LOCATION LABELS LEGEND

B-X	BORING LOCATION/DESIGNATION
TP-X	TEST PIT LOCATION/DESIGNATION
SW-X	STORMWATER TEST LOCATION/DESIGNATION
TP-CX	CIVIL ENGINEER TEST PIT/INFILTRATION TEST LOCATION/DESIGNATION

TEST LOCATION LEGEND NOTES:

A. BORINGS, TEST PITS AND STORMWATER TESTS WERE PERFORMED BY CARLIN-SIMPSON AND ASSOCIATES. THE CIVIL ENGINEER TEST PITS/INFILTRATION TESTS WERE PERFORMED BY JMC, PLLC TO ACQUIRE INFORMATION FOR THE DESIGN OF THE PROPOSED ON SITE WASTEWATER TREATMENT SYSTEM.

LEGEND

- EXISTING PROPERTY LINE
- ADJACENT PROPERTY LINE
- EXISTING EASEMENT LINE
- WLF-63 WLF-64 WLF-65 EXISTING WETLAND LINE AND DELINEATION
- EXISTING BUILDING LINE
- EXISTING PAVEMENT EDGE
- EXISTING CURB LINE
- 172 EXISTING CONTOUR
- 170 EXISTING INDEX CONTOUR
- EXISTING STONE WALL
- EXISTING RETAINING WALL
- EXISTING GUIDE RAIL
- EXISTING FENCE
- 36" RCP EXISTING STORM DRAIN LINE AND SIZE
- 8" SAN EXISTING SANITARY LINE AND SIZE
- EXISTING DRAIN INLET
- EXISTING MANHOLE
- EXISTING FIRE HYDRANT
- GV EXISTING GAS VALVE
- WV EXISTING WATER VALVE
- EXISTING UTILITY POLE
- EXISTING LIGHT POLE
- EXISTING SIGN
- PROPOSED BUILDING LINE
- PROPOSED CONCRETE CURB
- PROPOSED CONCRETE SIDEWALK
- SMH PROPOSED SANITARY SEWER MANHOLE
- MH PROPOSED STORM DRAIN MANHOLE
- CI PROPOSED TYPE CI DRAIN INLET
- DI PROPOSED TYPE DI DRAIN INLET
- PROPOSED HEADWALL
- WQS PROPOSED WATER QUALITY STRUCTURE
- OCS PROPOSED SUBSURFACE DRAINAGE OUTLET CONTROL STRUCTURE
- OCS PROPOSED OUTLET CONTROL STRUCTURE
- CO PROPOSED CLEANOUT
- PROPOSED HYDRANT
- 15" HDPE PROPOSED STORM DRAIN LINE & SIZE
- 8" PVC PROPOSED SANITARY SEWER LINE & SIZE
- 6" WATER PROPOSED WATER LINE & SIZE
- PROPOSED WATER VALVE
- PROPOSED RETAINING WALL (DESIGN BY OTHERS)

NOTES:

1. EXISTING CONDITIONS DEPICTED HEREON HAVE BEEN TAKEN FROM SURVEY TITLED, "TOPOGRAPHIC SURVEY OF PROPERTY," PREPARED BY JMC ENGINEERING, LANDSCAPE ARCHITECTURE & LAND SURVEYING, PLLC., LAST REVISED 10/29/2020. CONTRACTOR SHALL SATISFY HIM/HERSELF AS TO THE ACCURACY OF THE EXISTING INFORMATION SHOWN HEREON AND IDENTIFY ANY DISCREPANCIES PRIOR TO THE ISSUANCE OF A BID.
2. ALL STORMWATER MANAGEMENT PRACTICES SHALL REMAIN UNDISTURBED AND BE PROTECTED FROM HEAVY MACHINERY TRAFFIC DURING CONSTRUCTION. HOWEVER DURING CONSTRUCTION OF THE PRACTICE THE CONTRACTOR SHALL MINIMIZE AND AVOID HEAVY MACHINERY TRAFFIC TO THE MAXIMUM EXTENT PRACTICABLE. THERE SHALL BE NO STORAGE OF MATERIALS WITHIN AREAS TO BE USED FOR STORMWATER MANAGEMENT PRACTICES. THE CONTRACTOR SHALL INSTALL CONSTRUCTION FENCE AROUND THE PRACTICE TO DISCOURAGE VEHICLE TRAFFIC.
3. GEOTECHNICAL BORING/TEST PIT LOCATIONS DEPICTED ON THIS PLAN WERE TAKEN FROM THE GEOTECHNICAL REPORT ENTITLED, "REPORT ON SUBSURFACE SOIL AND FOUNDATION INVESTIGATION", DATED 10/14/2020, PREPARED BY CARLIN-SIMPSON AND ASSOCIATES, SUPPLEMENTED BY LOCATIONS OBSERVED BY JMC EMPLOYEES AND LOCATED USING GPS COORDINATES.
4. UNLESS OTHERWISE SPECIFIED, PIPE FOR STORM DRAINS SHALL BE HIGH DENSITY POLYETHYLENE PIPE (HDPE) WITH A SMOOTH INTERIOR AND ANNULAR EXTERIOR CORRUGATIONS IN ACCORDANCE WITH ASTM F-2648. JOINTS SHALL BE WATERTIGHT IN ACCORDANCE WITH ASTM D-3212.
5. UNLESS OTHERWISE SPECIFIED, PIPE FOR SANITARY SEWER GRAVITY LINES SHALL BE POLYVINYL CHLORIDE PIPE (PVCP), SDR-35, WITH PUSH-ON JOINTS IN ACCORDANCE WITH ASTM D-3034 AND D-3212.
6. UNLESS OTHERWISE SPECIFIED, PIPE FOR WATER LINES SHALL BE DOUBLE CEMENT-LINED DUCTILE IRON PIPE (DIP), CLASS 52, WITH MECHANICAL JOINTS IN ACCORDANCE WITH AWWA C-150, C-151, C-104 AND C-111
7. ELECTRIC, TELEPHONE, FIRE ALARM AND CABLE TELEVISION LINES SHALL BE INSTALLED UNDERGROUND IN CONDUIT IN ACCORDANCE WITH THE REQUIREMENTS OF THE UTILITY COMPANY HAVING JURISDICTION.
8. REFER TO JMC DRAWING C-300 "UTILITIES PLAN" FOR THE CONTINUATION OF THE SANITARY SEWER.

ORANGE COUNTY DEPARTMENT OF HEALTH NOTES:

1. APPLICANT: **FARRELL BUILDING COMPANY**
   PROPERTY OWNER: **CHUN S. MCGLASSON**
   SITE LOCATION: **ROUTE 300, TOWN OF NEWBURGH, NY 12550**
   TAX MAP NUMBER OF PARCELS: **SECTION 34 BLOCK 02 LOT 45**
2. ELEVATIONS OF THE ON-SITE WASTEWATER TREATMENT SYSTEM HAVE BEEN ESTABLISHED BASED ON THE SEWER INVERT AT THE BUILDING LINE AND GROUND ELEVATIONS WITHIN THE ABSORPTION AREA. SHOULD THE SEWER INVERT BE CHANGED, ADJUSTMENTS OF ELEVATIONS TO THE REMAINING PORTIONS OF THE SYSTEM MAY BE REQUIRED. ALL CHANGES SHALL BE ENDORSED BY THE ENGINEER PRIOR TO CONSTRUCTION.
3. THE DESIGN OF THE ON-SITE WASTEWATER TREATMENT AREAS ARE BASED ON A SOIL PERCOLATION RATE OF 21-30 MIN./INCH AND THE CONSTRUCTION OF TWO WAREHOUSES TOTALING 290,000 SQUARE FEET, BASED UPON ONE EMPLOYEE PER 1,000 SQUARE FEET AND 12 GPD/EMPLOYEE (15 GPD - 20% FOR WATER SAVING FIXTURES) A MAXIMUM FLOW RATE OF 3,480 GPD IS ANTICIPATED.
4. THE ON-SITE WASTEWATER TREATMENT SYSTEM FOR THE BUILDING SHALL INCLUDE THE FOLLOWING IMPROVEMENTS:
   - **2,944** LINEAR FEET, 24 INCH WIDE ABSORPTION TRENCH (PRIMARY)
   - **2,944** LINEAR FEET, 24 INCH WIDE ABSORPTION TRENCH (EXPANSION)
   - **1-3,500** GALLON PRECAST CONCRETE SEPTIC TANK
   - **1-2,000** GALLON PRECAST CONCRETE SEPTIC TANK
   - **4** EACH PRECAST CONCRETE 8 OUTLET DISTRIBUTION BOX

   ADDITIONAL IMPROVEMENTS: **4 OUTLET ALTERNATING CUE BOX DOSING CHAMBER**
5. THE DESIGN SDS TREATMENT CAPACITY IS 3,480 GALLONS PER DAY HANDLED WITH 24" WIDE ABSORPTION TRENCHES. IT IS BASED UPON NEW YORK STATE DEPARTMENT OF ENVIRONMENTAL CONSERVATION "NEW YORK STATE DESIGN STANDARDS FOR INTERMEDIATE SIZED WASTEWATER TREATMENT SYSTEMS", TABLE 3, EXPECTED LOADING RATES FOR A WAREHOUSE OF 15 GAL./DAY PER EMPLOYEE, AT 290 EMPLOYEES. THE SDS REQUIRED AREA IS 5,800 SQUARE FEET BASED UPON AN APPLICATION RATE OF 0.60 GAL/DAY/SF, 5,888 SQUARE FEET OF TREATMENT AREA IS PROVIDED.
6. BASE INFORMATION WAS TAKEN FROM THE "TOPOGRAPHIC SURVEY OF PROPERTY," PREPARED BY JMC, LAST REVISED 10/29/2020.
7. THE BUILDING SEWER PIPE SHALL BE LAID ON A FIRM FOUNDATION AT A MINIMUM GRADE OF ONE-QUARTER INCH PER FOOT (2.00%). NINETY DEGREE ELBOWS ARE NOT PERMITTED AND ALL FORTY FIVE DEGREE BENDS SHALL HAVE ACCESSIBLE CLEANOUTS.
8. ALL PIPES CONNECTING TO TANK AND BOXES SHALL BE CUT FLUSH WITH THE INSIDE WALL OF THE BOX.
9. PRIOR TO ANY EXCAVATION ALL UNDERGROUND UTILITIES MUST BE LOCATED. CALL 1-800-962-7962.
10. THE DESIGN, CONSTRUCTION AND INSTALLATION SHALL BE IN ACCORDANCE WITH THIS PLAN AND GENERALLY ACCEPTED STANDARDS IN EFFECT AT THE TIME OF CONSTRUCTION WHICH INCLUDE:

    "NEW YORK STATE DESIGN STANDARDS FOR INTERMEDIATE SIZED WASTEWATER TREATMENT SYSTEMS"
    "RECOMMENDED STANDARDS FOR SEWAGE TREATMENT WORKS, (TEN STATES)."
    "NEW YORK STATE DEPARTMENT OF HEALTH AND ORANGE COUNTY DEPARTMENT OF HEALTH POLICIES, PROCEDURES AND STANDARDS."
11. THIS PLAN IS APPROVED AS MEETING THE APPROPRIATE AND APPLIED TECHNICAL STANDARDS, GUIDELINES, POLICIES AND PROCEDURES FOR ARRANGEMENT OF SEWAGE DISPOSAL AND TREATMENT AND WATER SUPPLY FACILITIES.
12. THE DESIGN AND LOCATION OF SANITARY FACILITIES (WATER AND SEWER SYSTEMS) SHALL NOT BE CHANGED.
13. NO WELLS EXIST WITHIN 300 FT OF THIS PROJECT UNLESS SHOWN ON THE PLANS.
14. TRENCHES SHALL NOT BE INSTALLED IN WET SOIL. THE SIDE AND BOTTOM OF TRENCHES MUST BE RAKES. THE ENDS OF LATERALS MUST BE CAPPED.
15. THERE IS NO REGRADING EXCEPT AS SHOWN ON THE APPROVED PLANS, IN THE AREA OF THE ABSORPTION FIELDS
16. HEAVY EQUIPMENT SHALL BE KEPT OFF THE AREA OF THE ABSORPTION FIELDS EXCEPT DURING THE ACTUAL CONSTRUCTION. THERE SHALL BE NO UNNECESSARY MOVEMENT OF CONSTRUCTION EQUIPMENT IN THE ACTUAL ABSORPTION FIELD AREA, BEFORE, DURING OR AFTER CONSTRUCTION. EXTREME CARE MUST BE TAKEN DURING THE ACTUAL CONSTRUCTION SO AS TO AVOID ANY UNDUE COMPACTION THAT COULD RESULT IN A CHANGE OF THE ABSORPTION CAPACITY OF THE SOIL ON WHICH THE DESIGN WAS BASED.
17. NO SWIMMING POOLS, DRIVEWAYS OR STRUCTURES THAT MAY COMPACT THE SOIL SHALL BE LOCATED OVER ANY PORTION OF THE ABSORPTION FIELD.
18. THIS SYSTEM WAS NOT DESIGNED TO ACCOMMODATE GARBAGE GRINDER, JACUZZI TYPE SPA TUBS OVER 100 GALLONS, OR WATER CONDITIONERS. AS SUCH THESE ITEMS SHALL NOT BE INSTALLED UNLESS THE SYSTEM IS REDESIGNED TO ACCOUNT FOR THEM AND REAPPROVED BY THE ORANGE COUNTY HEALTH DEPARTMENT.
19. THERE MUST BE AN UNINTERRUPTED POSITIVE SLOPE FROM THE SEPTIC TANK (OR ANY PUMPING OR DOSING CHAMBERO TO THE BUILDING, ALLOWING SEPTIC GASES TO DISCHARGE THROUGH THE STACK VENT.
20. THE OWNER APPLICANT SHALL BE PROVIDED WITH A COPY OF THE APPROVED PLANS AND AN ACCURATE AS-BUILT DRAWING OF ANY EXISTING SANITARY FACILITIES.
21. THE SEPTIC TANKS SHOULD BE INSPECTED PERIODICALLY AND PUMPED EVERY 2-3 YEARS.
22. DISTRIBUTION BOX SHOULD BE INSPECTED PERIODICALLY TO ASSURE THAT THEY ARE LEVEL AND OPERATING PROPERLY.
23. INDIVIDUAL SEWAGE DISPOSAL SYSTEMS SHALL NO LONGER BE CONSTRUCTED OR USED WHEN PUBLIC FACILITIES BECOME AVAILABLE. CONNECTION TO THE PUBLIC SEWER SYSTEM IS REQUIRED WITHIN ONE YEAR OF AVAILABILITY.
24. ORANGE COUNTY DEPARTMENT OF HEALTH PLAN APPROVAL IS LIMITED TO 5 YEARS. TIME EXTENSIONS FOR PLAN APPROVAL MAY BE GRANTED BY THE ORANGE COUNTY DEPARTMENT OF HEALTH BASED UPON REGULATIONS IN EFFECT AT THAT TIME. A NEW PLAN SUBMISSION MAY BE REQUIRED TO OBTAIN A TIME EXTENSION.
25. A NEW YORK STATE LICENSED PROFESSIONAL ENGINEER SHALL INSPECT THE SANITARY FACILITIES AT THE TIME OF CONSTRUCTION. THE ENGINEER SHALL CERTIFY TO THE ORANGE COUNTY DEPARTMENT OF HEALTH AND THE LOCAL CODE ENFORCEMENT OFFICER THAT THE FACILITIES HAVE BEEN INSTALLED IN ACCORDANCE WITH THE APPROVED PLANS AND THAT ANY SEPTIC TANK JOINTS HAVE BEEN SEEALED AND TESTED FOR WATER TIGHTNESS.

No.	Revision	Date	By

Previous Editions Obsolete

APPLICANT:
FARRELL BUILDING COMPANY
2317 MONTAUK HIGHWAY
BRIDGEHAMPTON, NY 11932

JMC Planning, Engineering, Landscape Architecture & Land Surveying, PLLC
JMC Site Development Consultants, LLC
John Meyer Consulting, Inc.
120 BEDFORD ROAD • ARMONK, NY 10504
voice 914.273.5225 • fax 914.273.2102
www.jmcpllc.com

ON SITE WASTEWATER TREATMENT SYSTEM PLAN

FARRELL INDUSTRIAL PARK
ROUTE 300
TOWN OF NEWBURGH, NY

ANY ALTERATION OF PLANS, SPECIFICATIONS, PLATS AND REPORTS BEARING THE SEAL OF A LICENSED PROFESSIONAL ENGINEER OR LICENSED LAND SURVEYOR IS A VIOLATION OF SECTION 7209 OF THE NEW YORK STATE EDUCATION LAW, EXCEPT AS PROVIDED FOR BY SECTION 7209, SUBSECTION 2.

Drawn: TC	Approved: DL/JS
Scale:	SEE PLAN
Date:	12/03/2020
Project No:	18156
18156-SEPTIC	OWTS / GRADUTIL.scr
Drawing No:	C-310

COPYRIGHT © 2019 by JMC All Rights Reserved. No part of this document may be reproduced, stored in a retrieval system, or transmitted in any form or by any means, electronic, mechanical, photocopying, recording or otherwise, without the prior written permission of JMC PLANNING, ENGINEERING, LANDSCAPE ARCHITECTURE & LAND SURVEYING, PLLC | JMC SITE DEVELOPMENT CONSULTANTS, LLC | JOHN MEYER CONSULTING, INC. (JMC). Any modifications or alterations to this document without the written permission of JMC shall render them invalid and unusable.
NOT FOR CONSTRUCTION

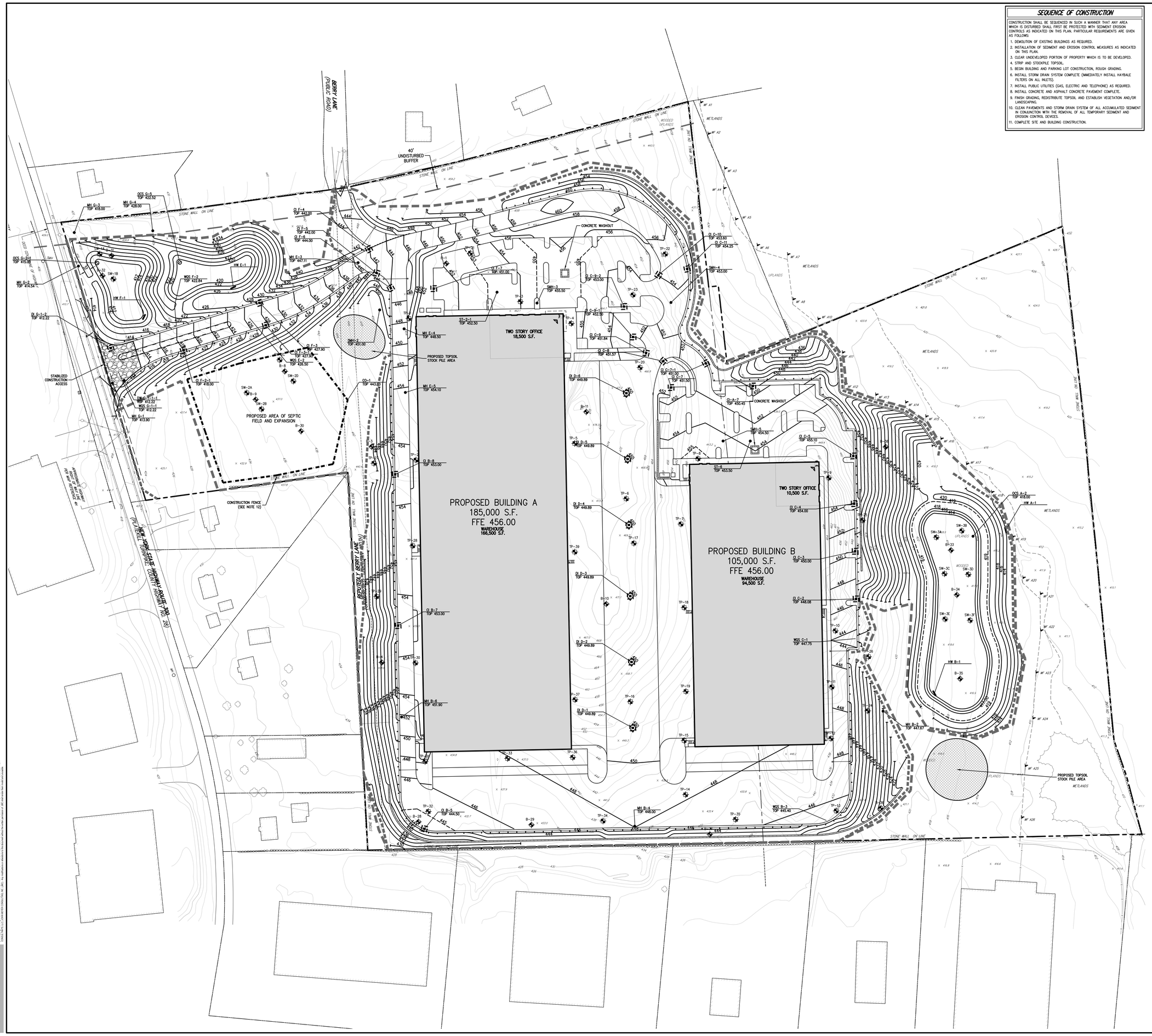

SEQUENCE OF CONSTRUCTION

CONSTRUCTION SHALL BE SEQUENCED IN SUCH A MANNER THAT ANY AREA WHICH IS DISTURBED SHALL FIRST BE PROTECTED WITH SEDIMENT EROSION CONTROLS AS INDICATED ON THIS PLAN. PARTICULAR REQUIREMENTS ARE GIVEN AS FOLLOWS:

1. DEMOLITION OF EXISTING BUILDINGS AS REQUIRED.
2. INSTALLATION OF SEDIMENT AND EROSION CONTROL MEASURES AS INDICATED ON THIS PLAN.
3. CLEAR UNDEVELOPED PORTION OF PROPERTY WHICH IS TO BE DEVELOPED.
4. STRIP AND STOCKPILE TOPSOIL.
5. BEGIN BUILDING AND PARKING LOT CONSTRUCTION, ROUGH GRADING.
6. INSTALL STORM DRAIN SYSTEM COMPLETE (IMMEDIATELY INSTALL HAYBALE FILTERS ON ALL INLETS).
7. INSTALL PUBLIC UTILITIES (GAS, ELECTRIC AND TELEPHONE) AS REQUIRED.
8. INSTALL CONCRETE AND ASPHALT CONCRETE PAVEMENT COMPLETE.
9. FINISH GRADING, REDISTRIBUTE TOPSOIL AND ESTABLISH VEGETATION AND/OR LANDSCAPING.
10. CLEAN PAVEMENTS AND STORM DRAIN SYSTEM OF ALL ACCUMULATED SEDIMENT IN CONJUNCTION WITH THE REMOVAL OF ALL TEMPORARY SEDIMENT AND EROSION CONTROL DEVICES.
11. COMPLETE SITE AND BUILDING CONSTRUCTION.

LEGEND

- PROPOSED INLET PROTECTION
- PROPOSED CONSTRUCTION FENCE
- PROPOSED SILT FENCE
- PROPOSED LIMIT OF DISTURBANCE
- PROPOSED STABILIZED CONSTRUCTION ENTRANCE
- PROPOSED STOCKPILE AREA
- PROPOSED TEMPORARY SWALE
- PROPOSED TEMPORARY SEDIMENT BASIN
- TEMPORARY RISER & ANTI-VORTEX DEVICE

NOTES:

1. EXISTING CONDITIONS DEPICTED HEREON HAVE BEEN TAKEN FROM SURVEY TITLED, "TOPOGRAPHIC SURVEY OF PROPERTY," PREPARED BY JMC ENGINEERING, LANDSCAPE ARCHITECTURE & LAND SURVEYING, PLLC., LAST REVISED 10/29/2020. CONTRACTOR SHALL SATISFY HIM/HERSELF AS TO THE ACCURACY OF THE EXISTING INFORMATION SHOWN HEREON AND IDENTIFY ANY DISCREPANCIES PRIOR TO THE ISSUANCE OF A BID.
2. THIS PLAN IS FOR TEMPORARY EROSION AND SEDIMENT CONTROL INFORMATION ONLY.
3. PRIOR TO BEGINNING ANY CLEARING, GRUBBING OR EXCAVATION, ALL EROSION AND SEDIMENT CONTROL MEASURES SHALL BE INSTALLED IN ACCORDANCE WITH ALL THE PLANS AND SPECIFICATIONS. EROSION AND SEDIMENT CONTROL MEASURES SHALL BE MAINTAINED UNTIL THE SITE IS STABILIZED. FINAL STABILIZATION OF LANDSCAPED AREAS SHALL BE IN ACCORDANCE WITH THE LANDSCAPE PLAN.
4. THE CONTRACTOR SHALL INSPECT AND MAINTAIN ON-SITE EROSION AND SEDIMENT CONTROL MEASURES ON A DAILY BASIS. ALL COLLECTED SEDIMENT WITHIN SEDIMENT BARRIERS SHALL BE REMOVED PERIODICALLY AS REQUIRED TO MAINTAIN THE FUNCTION OF THE SEDIMENT BARRIERS. ALL SEDIMENT COLLECTED SHALL BE RESPREAD ON-SITE WITHIN STABILIZED AREAS AS DIRECTED BY THE OWNERS REPRESENTATIVE.
5. THE CONTRACTOR SHALL INSPECT DOWNSTREAM CONDITIONS FOR EVIDENCE OF SEDIMENTATION ON A WEEKLY BASIS, AFTER EACH RAINSTORM, AND AS MAY BE REQUIRED OR DIRECTED BY ALL APPLICABLE APPROVALS AND PERMITS. THE CONTRACTOR SHALL IMMEDIATELY PROVIDE A WRITTEN REPORT ON FINDINGS OF SEDIMENT IN DOWNSTREAM AREAS TO ALL AUTHORITIES HAVING JURISDICTION AND MAKE REPAIRS AS REQUIRED OR DIRECTED.
6. ADDITIONAL EROSION AND SEDIMENT CONTROL MEASURES SHALL BE INSTALLED BY THE CONTRACTOR AS REQUIRED/WARRANTED BY FIELD CONDITIONS AND AS DIRECTED BY THE OWNERS REPRESENTATIVE, JMC, AND/OR ANY AUTHORITY HAVING JURISDICTION.
7. STOCKPILING OF CONSTRUCTION MATERIAL SHALL BE PLACED ON-SITE IN THE AREA DESIGNATED ON THIS PLAN OR AS APPROVED BY THE OWNERS REPRESENTATIVE. STOCKPILED EXCAVATED MATERIAL SHALL HAVE TWO ROWS OF SILT FENCE LOCATED AROUND ITS PERIMETER. ALL STOCKPILED MATERIAL SHALL BE MAINTAINED IN AN ORDERLY MANNER SO AS NOT TO IMPEDE ON PEDESTRIAN AND/OR VEHICULAR TRAFFIC CIRCULATION ROUTES.
7. DUST SHALL BE CONTROLLED BY SPRINKLING OR OTHER APPROVED METHODS AS NECESSARY, OR AS DIRECTED BY THE OWNERS REPRESENTATIVE.
8. ALL STORMWATER MANAGEMENT PRACTICES SHALL REMAIN UNDISTURBED AND BE PROTECTED FROM HEAVY MACHINERY TRAFFIC DURING CONSTRUCTION. HOWEVER DURING CONSTRUCTION OF THE PRACTICE THE CONTRACTOR SHALL MINIMIZE AND AVOID HEAVY MACHINERY TRAFFIC TO THE MAXIMUM EXTENT PRACTICABLE. THERE SHALL BE NO STORAGE OF MATERIALS WITHIN AREAS TO BE USED FOR STORMWATER MANAGEMENT PRACTICES. THE CONTRACTOR SHALL INSTALL CONSTRUCTION FENCE AROUND THE PRACTICE TO DISCOURAGE VEHICLE TRAFFIC.
9. ALL EXPOSED SLOPES AND GRADED/DISTURBED AREAS, THAT WILL NOT BE FURTHER DISTURBED WITHIN 14 CALENDAR DAYS (7 DAYS FOR CONSTRUCTION SITES THAT EITHER DIRECTLY DISCHARGE TO ONE OF THE 303(d) SEGMENTS LISTED IN APPENDIX E OF THE GENERAL PERMIT OR ARE LOCATED WITHIN ONE OF THE WATERSHEDS LISTED IN APPENDIX C OF THE GENERAL PERMIT), SHALL BE TEMPORARILY SEEDED WITHIN 24 HOURS OF DISTURBANCE, IN ACCORDANCE WITH THE NEW YORK STATE DEPARTMENT OF ENVIRONMENTAL CONSERVATION (NYSDEC) "EROSION AND SEDIMENT CONTROL GUIDELINES" AND THE ANSI A300 "BEST MANAGEMENT PRACTICES FOR TREE AND SHRUB PLANTING, TRANSPLANTING, MAINTENANCE AND CARE," PREPARED BY THE INTERNATIONAL SOCIETY OF ARBORICULTURE (ISA), LATEST EDITIONS, AS FOLLOWS:
   - A. SEED MIXTURE AND RATE OF APPLICATION:
     - A.1. IN SPRING, SUMMER OR EARLY FALL, SEED THE AREA WITH RYEGRASS (ANNUAL OR PERENNIAL) AT 30 POUNDS PER ACRES (APPROXIMATELY 0.7 POUNDS/1000 SQUARE FEET OR USE 1 POUND/1000 SQUARE FEET).
     - A.2. IN LATE FALL OR EARLY WINTER, SEED THE AREA WITH CERTIFIED "ARGOSTOOK" WINTER RYE (CEREAL RYE) AT 100 POUNDS PER ACRE (2.5 POUNDS/1000 SQUARE FEET).
   - B. APPLICATION SHALL BE UNIFORM BY MECHANICAL OR HYDROSEED METHODS.
   - C. MULCH ALL SEEDED AREAS WITH STRAW AT A RATE OF 2 TONS PER ACRE (90 POUNDS PER 1,000 SQUARE FEET) SUCH THAT THE MULCH FORMS A CONTINUOUS BLANKET.
10. ALL SEEDED AREAS SHALL BE FERTILIZED, RESEEDED, AND MULCHED AS NECESSARY TO MAINTAIN VIGOROUS, DENSE VEGETATIVE COVER.
11. TEMPORARY SEED MIXTURES SHALL NOT BE PLACED ON AREAS WHERE FINAL GRADE HAS BEEN ESTABLISHED AND TOPSOIL HAS BEEN PLACED UNLESS OTHERWISE DIRECTED BY THE PROJECT LANDSCAPE ARCHITECT.
12. CONSTRUCTION FENCE SHALL BE INSTALLED AROUND THE ENTIRE PERIMETER OF THE PROPOSED SEPTIC FIELD AND EXPANSION AREA PRIOR TO THE START OF ANY SITEWORK, INCLUDING TREE REMOVAL. THE FENCE SHALL BE MAINTAINED AT ALL TIMES DURING CONSTRUCTION. CONSTRUCTION ACTIVITY WITHIN THIS AREA SHALL BE LIMITED TO THE WORK REQUIRED FOR THE INSTALLATION OF THE SEPTIC SYSTEM AND ALL WORK SHALL BE DONE WITHOUT THE USE OF HEAVY EQUIPMENT.

No.	Revision	Date	By

Previous Editions Obsolete

APPLICANT:
FARRELL BUILDING COMPANY
2337 JUNCTION HIGHWAY
BRIDGEHAMPTON, NY 11932

JMC Planning, Engineering, Landscape Architecture & Land Surveying, PLLC
JMC Site Development Consultants, LLC
John Meyer Consulting, Inc.
120 BEDFORD ROAD • ARMONK, NY 10504
voice 914.273.5225 • fax 914.273.2102
www.jmcpllc.com

EROSION AND SEDIMENT CONTROL PLAN

FARRELL INDUSTRIAL PARK
ROUTE 300
TOWN OF NEWBURGH, NY

ANY ALTERATION OF PLANS, SPECIFICATIONS, PLATS AND REPORTS BEARING THE SEAL OF A LICENSED PROFESSIONAL ENGINEER OR LICENSED LAND SURVEYOR IS A VIOLATION OF SECTION 7209 OF THE NEW YORK STATE EDUCATION LAW, EXCEPT AS PROVIDED FOR BY SECTION 7209, SUBSECTION 2.

Drawn:	TC
Approved:	DL/JS
Scale:	1" = 50'
Date:	12/03/2020
Project No:	18156
18156-SAE	SE	SE.scr
Drawing No:	C-400

NOT FOR CONSTRUCTION

COPYRIGHT © 2020 by JMC All Rights Reserved. No part of this document may be reproduced, stored in a retrieval system, or transmitted in any form or by means, electronic, mechanical, photocopying, recording or otherwise, without the prior written permission of JMC PLANNING, ENGINEERING, LANDSCAPE ARCHITECTURE & LAND SURVEYING, PLLC | JMC SITE DEVELOPMENT CONSULTANTS, LLC | JOHN MEYER CONSULTING, INC. (JMC). Any modifications or alterations to this document without the written permission of JMC shall render them invalid and unusable.

Calculation Summary								
Label	Units	Avg	Max	Min	Avg/Min	Max/Min	PtSpcLr	PtSpcTb
ZONE A (DOCK AREA)	Fc	0.84	3.9	0.0	N.A.	N.A.	10	10
ZONE B (ENTRANCE DRIVE)	Fc	2.10	4.6	0.3	7.00	15.33		
ZONE C (NORTH PARKING)	Fc	1.59	4.1	0.3	5.30	13.67		
ZONE D (SOUTH PARKING)	Fc	1.56	4.7	0.3	5.20	15.67		
ZONE E (TRAILER PARKING AND SIDE DRIVES)	Fc	1.65	5.0	0.1	16.50	50.00		

Luminaire Schedule

WLS13558 FARRELL INDUSTRIAL PARK NEWBURGH, NY PM: HOLLY PLEASE EMAIL US FOR PRICING AT HOLLY@WLSLIGHTING.COM

Symbol	Qty	Label	Lum. Lumens	LLF	Description	Lum. Watts
	15	A	17562	0.950	WLS-CLXM-LED-18L-SIL-5W-40-70CRI-SLM 20' MOUNTING HEIGHT	149.5
	8	B	12044	0.950	WLS-CLXM-LED-18L-SIL-FT-40-70CRI-IL-SLM 20' MOUNTING HEIGH	149.5
	9	C	12650	0.950	WLS-CLXM-LED-12L-SIL-3-40-70CRI-SLM 20' MOUNTING HEIGHT	93.1
	32	D	12591	0.950	WLS-CLXM-LED-12L-SIL-FT-40-70CRI-WM-SLM 20' MOUNTING HEIGH	93.1

LEGEND

- EXISTING UTILITY POLE
- EXISTING LIGHT POLE
- PROPOSED SINGLE ARM LIGHTING STANDARD (DESIGN BY OTHERS)
- PROPOSED SITE LIGHTING (WALL MOUNTED)
- PROPOSED BOLLARD LIGHTING STANDARD
- PROPOSED ILLUMINANCE IN FOOT-CANDLES
- PROPOSED STANDARD LIGHTING AND ISOLUX PATTERNS

NOTES:

1. EXISTING CONDITIONS DEPICTED HEREON HAVE BEEN TAKEN FROM SURVEY TITLED, "TOPOGRAPHIC SURVEY OF PROPERTY," PREPARED BY JMC ENGINEERING, LANDSCAPE ARCHITECTURE & LAND SURVEYING, PLLC., LAST REVISED 10/29/2020. CONTRACTOR SHALL SATISFY HIM/HERSELF AS TO THE ACCURACY OF THE EXISTING INFORMATION SHOWN HEREON AND IDENTIFY ANY DISCREPANCIES PRIOR TO THE ISSUANCE OF A BID.
2. LIGHTING DESIGN SHOWN HEREON HAS BEEN TAKEN FROM DRAWING TITLED, "FARRELL INDUSTRIAL PARK NEWBURGH, NY," PREPARED BY WLS LIGHTING, DATED 11/24/2020.
3. ALL CABLES AND WIRING SHALL BE INSTALLED UNDERGROUND IN CONDUIT. CONDUIT SHALL BE SCHEDULE 40 PVC CONDUIT INSTALLED WITH TWO (2) FEET OF COVER. MINIMUM SIZE OF CONDUIT SHALL BE TWO (2) INCH DIAMETER.

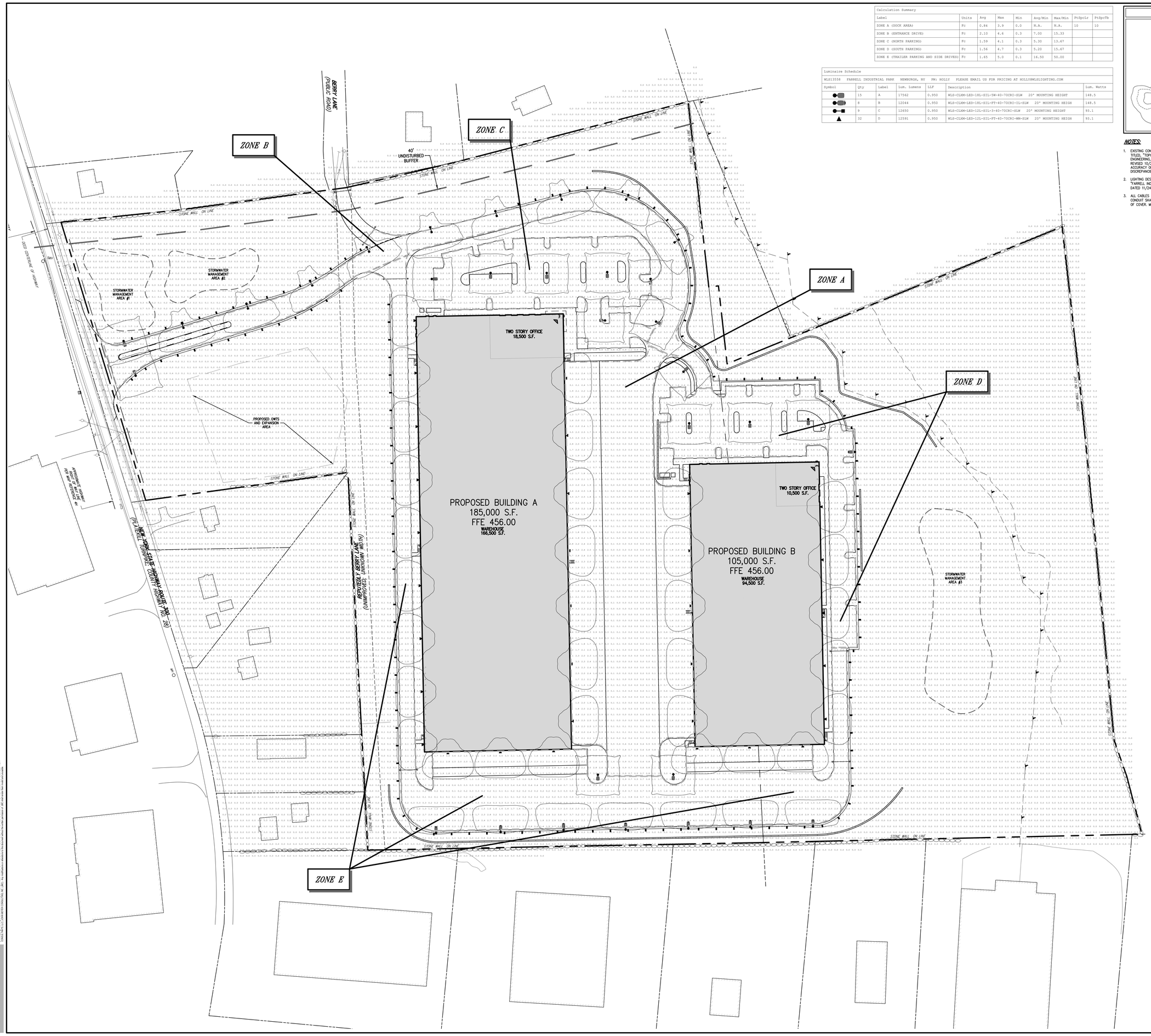

NOT FOR CONSTRUCTION

COPYRIGHT © 2021 by JMC All Rights Reserved. No part of this document may be reproduced, stored in a retrieval system, or transmitted in any form or by means, electronic, mechanical, photocopying, recording or otherwise, without the prior written permission of JMC PLANNING, ENGINEERING, LANDSCAPE ARCHITECTURE & LAND SURVEYING, PLLC. (JMC). Any modifications or alterations to this document without the written permission of JMC shall render them invalid and unusable.

No.	Revision	Date	By

Previous Editions Obsolete

APPLICANT:

FARRELL BUILDING COMPANY
237 NORTH PLANK HIGHWAY
BRIDGEHAMPTON, NY 11932

JMC Planning, Engineering, Landscape Architecture & Land Surveying, PLLC
JMC Site Development Consultants, LLC
John Meyer Consulting, Inc.
120 BEDFORD ROAD • ARMONK, NY 10504
voice 914.273.5225 • fax 914.273.2102
www.jmcpllc.com

JMC

LIGHTING PLAN

FARRELL INDUSTRIAL PARK
ROUTE 300
TOWN OF NEWBURGH, NY

ANY ALTERATION OF PLANS, SPECIFICATIONS, PLATS AND REPORTS BEARING THE SEAL OF A LICENSED PROFESSIONAL ENGINEER OR LICENSED LAND SURVEYOR IS A VIOLATION OF SECTION 7209 OF THE NEW YORK STATE EDUCATION LAW, EXCEPT AS PROVIDED FOR BY SECTION 7209, SUBSECTION 2.

Drawn:	TC	Approved:	DL/JS
Scale:	1" = 50'		
Date:	12/03/2020		
Project No:	18156		
18156-LIGHTING	LIGHT	LAY.scr	
Drawing No:	C-600		

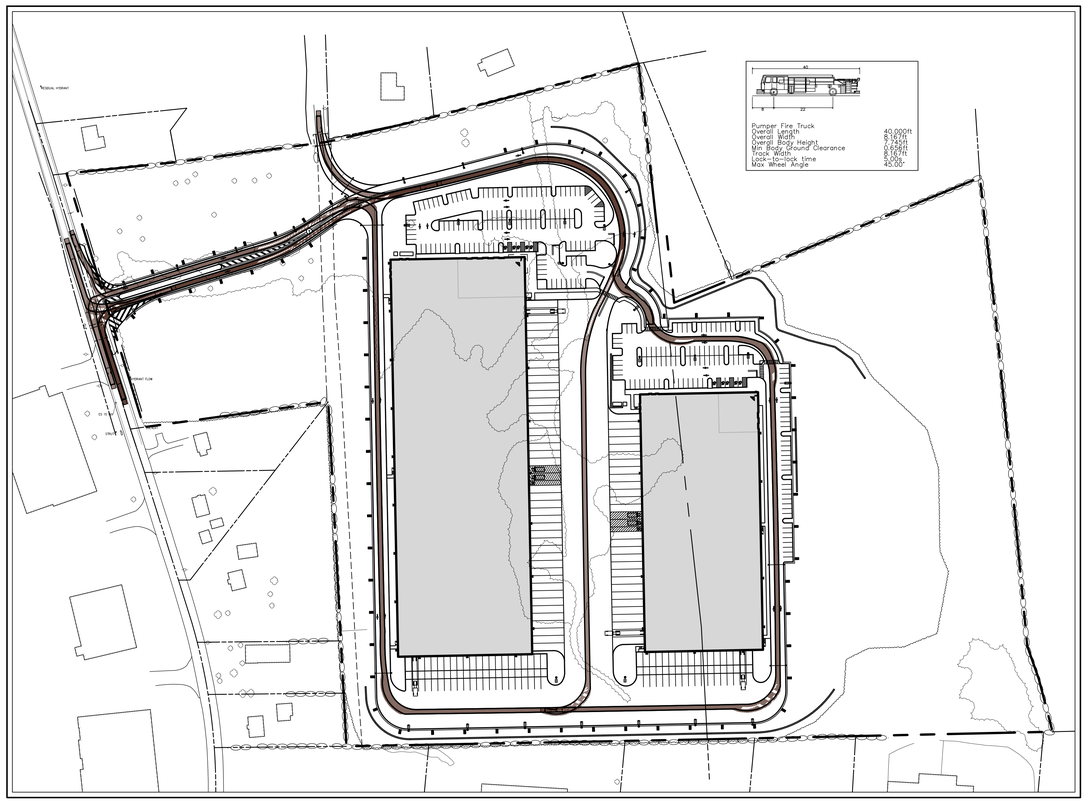

FIRE TRUCK

–ENTERING AND EXITING–

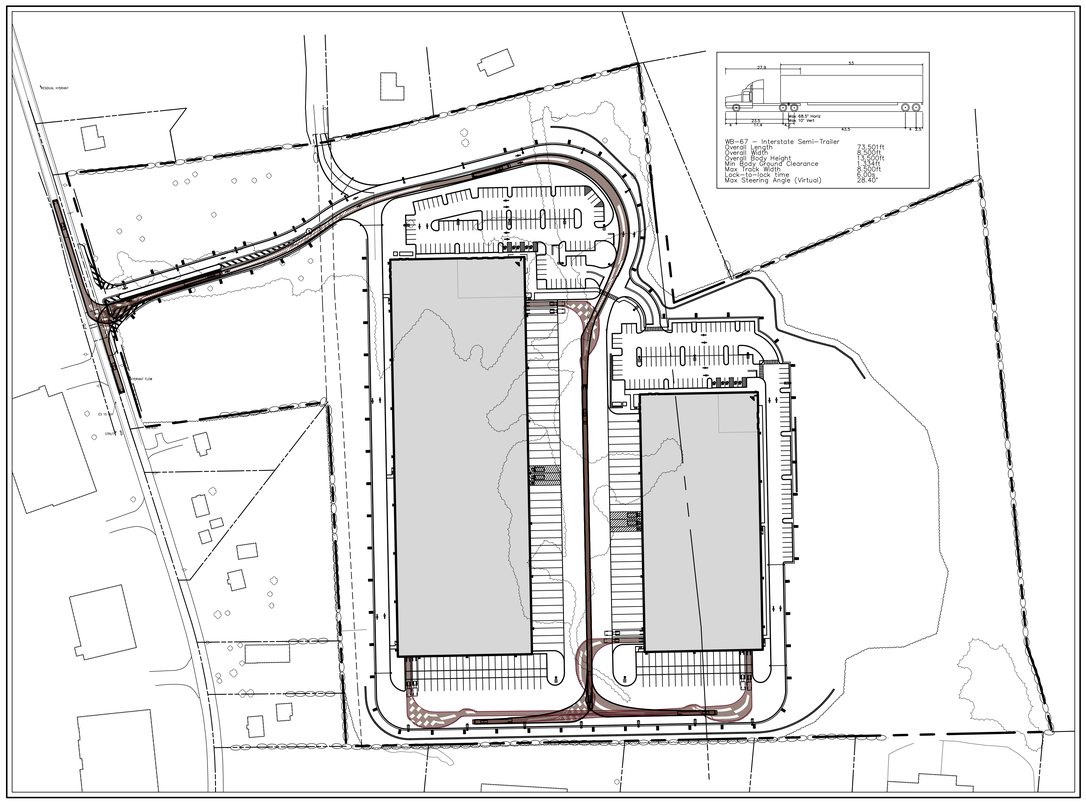

DELIVERY TRUCK

–ENTERING–

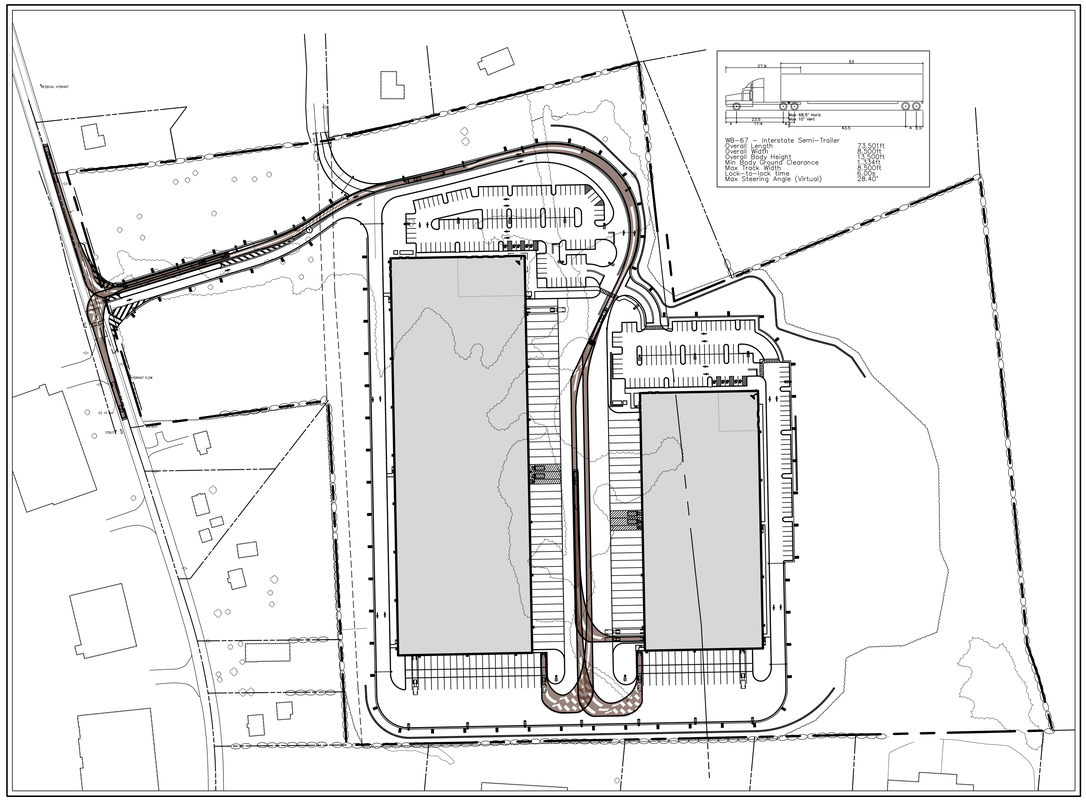

DELIVERY TRUCK

–EXITING–

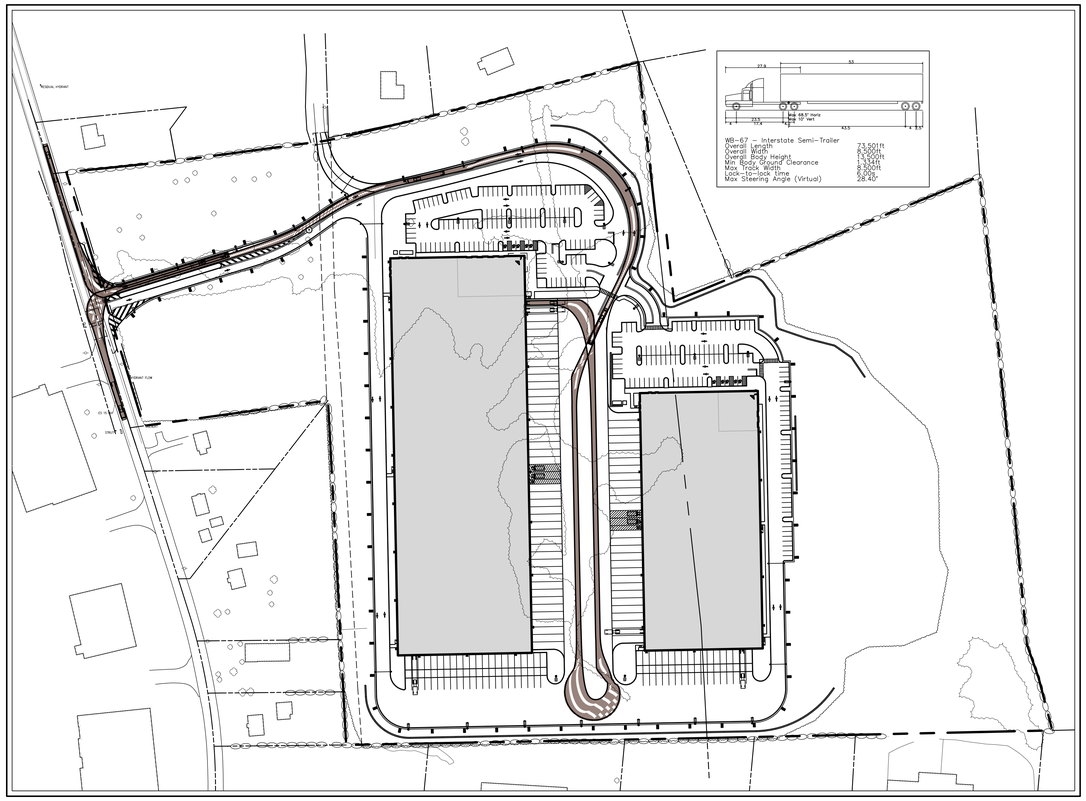

DELIVERY TRUCK

–EXITING ALT–

No.	Revision	Date	By

Previous Editions Obsolete

APPLICANT:

FARRELL BUILDING COMPANY
2537 WOODBURY HIGHWAY
BRIDGEHAMPTON, NY 11932

JMC Planning, Engineering, Landscape Architecture & Land Surveying, PLLC
JMC Site Development Consultants, LLC
John Meyer Consulting, Inc.
120 BEDFORD ROAD - ARMONK, NY 10504
voice 914.273.5225 - fax 914.273.2102
www.jmcpllc.com

TRUCK TURNING PLAN

FARRELL INDUSTRIAL PARK
ROUTE 300
TOWN OF NEWBURGH, NY

ANY ALTERATION OF PLANS, SPECIFICATIONS, PLATS AND REPORTS BEARING THE SEAL OF A LICENSED PROFESSIONAL ENGINEER OR LICENSED LAND SURVEYOR IS A VIOLATION OF SECTION 7209 OF THE NEW YORK STATE EDUCATION LAW, EXCEPT AS PROVIDED FOR BY SECTION 7209, SUBSECTION 2.

Drawn:	TC	Approved:	DL/JS
Scale:	1" = 100'		
Date:	12/03/2020		
Project No:	18156		
18156-LAYOUT	TRUCK	TRUCK.scr	
Drawing No:	C-700		

NOT FOR CONSTRUCTION

COPYRIGHT © 2019 by JMC All Rights Reserved. No part of this document may be reproduced, stored in a retrieval system, or transmitted, in any form or by means, electronic, mechanical, photocopying, recording or otherwise, without the prior written permission of JMC PLANNING, ENGINEERING, LANDSCAPE ARCHITECTURE & LAND SURVEYING, PLLC (JMC). Any modifications or alterations to this document without the written permission of JMC shall render them invalid and unusable.

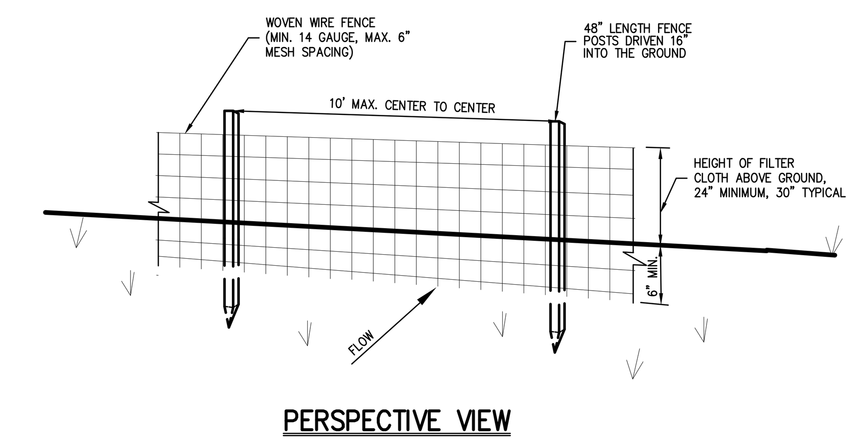

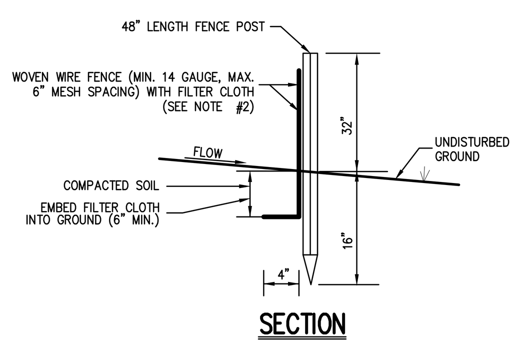

SLOPE	STEEPNESS	SLOPE LENGTH/FENCE LENGTH (FT.)
2–10%	50:1 TO 10:1	250/2000
10–20%	10:1 TO 5:1	150/1000
20–33%	5:1 TO 3:1	80/750
33–50%	3:1 TO 2:1	70/350
>50%	>2:1	30/175

*ALL SILT FENCES SHALL BE PLACED AS CLOSE TO THE DISTURBED AREA AS POSSIBLE, BUT AT LEAST 10 FEET FROM THE TOE OF A SLOPE STEEPER THAN 3H:1V, TO ALLOW FOR MAINTENANCE AND ROLL DOWN. THE AREA BEYOND THE FENCE MUST BE UNDISTURBED OR STABILIZED.

NOTES:

1. WOVEN WIRE FENCE SHALL BE FASTENED SECURELY TO FENCE POSTS WITH WIRE TIES OR STAPLES. POSTS SHALL BE STEEL, EITHER T OR U TYPE OR HARDWOOD.
2. FILTER CLOTH SHALL BE FASTENED SECURELY TO WOVEN WIRE FENCE WITH TIES SPACED EVERY 24" AT TOP AND MID SECTION. FENCE SHALL BE WOVEN WIRE, 6" MAXIMUM MESH OPENING.
3. WHEN TWO SECTIONS OF FILTER CLOTH ADJOIN EACH OTHER, THEY SHALL BE OVERLAPPED BY SIX INCHES AND FOLDED. FILTER CLOTH SHALL BE EITHER FILTER X, MIRAFI 100X, STABLINKA T140N, OR APPROVED EQUAL.
4. PREFABRICATED UNITS SHALL BE GEOFAB, ENVIROFENCE, OR APPROVED EQUAL.
5. MAINTENANCE SHALL BE PERFORMED AS NEEDED AND MATERIAL REMOVED AND REPLACED WHEN "BULGES" DEVELOP IN THE SILT FENCE.

SILT FENCE — 1

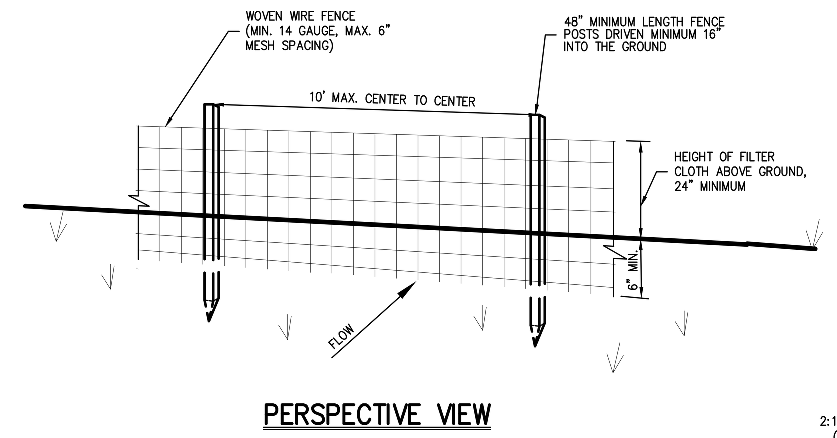

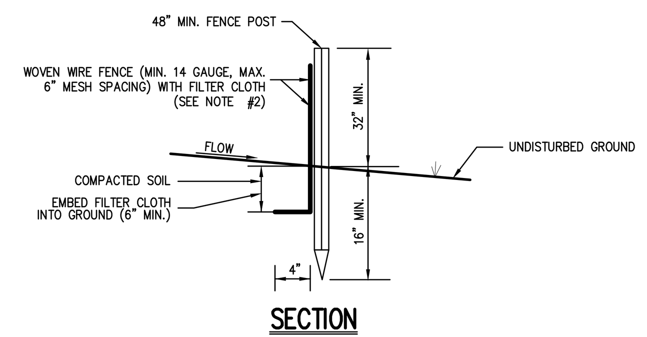

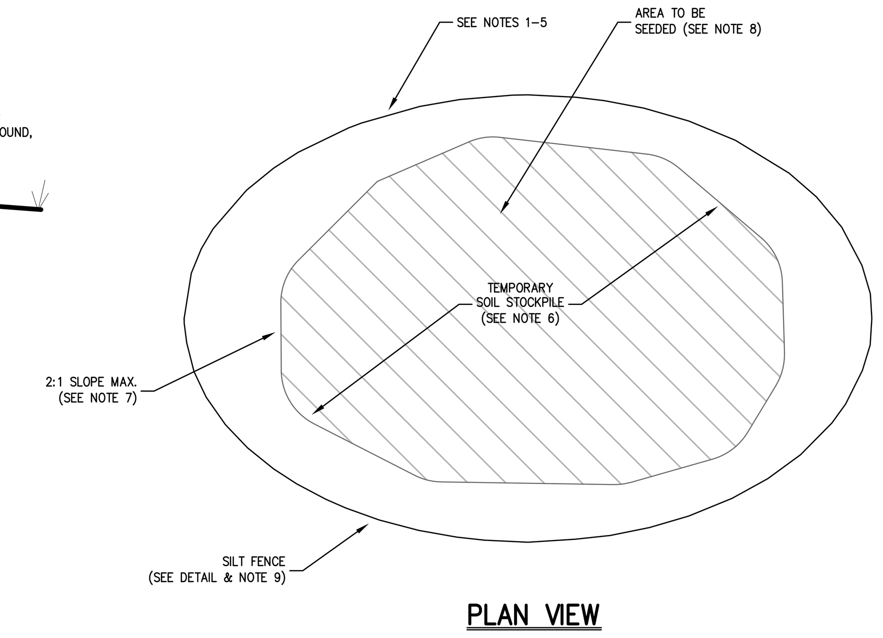

NOTES:

1. WOVEN WIRE FENCE SHALL BE FASTENED SECURELY TO FENCE POSTS WITH WIRE TIES OR STAPLES. POSTS SHALL BE STEEL, EITHER T OR U TYPE OR HARDWOOD.
2. FILTER CLOTH SHALL BE FASTENED SECURELY TO WOVEN WIRE FENCE WITH TIES SPACED EVERY 24" AT TOP AND MID SECTION. FENCE SHALL BE WOVEN WIRE, 6" MAXIMUM MESH OPENING.
3. WHEN TWO SECTIONS OF FILTER CLOTH ADJOIN EACH OTHER, THEY SHALL BE OVERLAPPED BY SIX INCHES AND FOLDED. FILTER CLOTH SHALL BE EITHER FILTER X, MIRAFI 100X, STABLINKA T140N, OR APPROVED EQUAL.
4. PREFABRICATED UNITS SHALL BE GEOFAB, ENVIROFENCE, OR APPROVED EQUAL.
5. MAINTENANCE SHALL BE PERFORMED AS NEEDED AND MATERIAL REMOVED AND REPLACED WHEN "BULGES" DEVELOP IN THE SILT FENCE.
6. THE AREA CHOSEN FOR ALL TEMPORARY SOIL STOCKPILES SHALL BE DRY AND STABLE.
7. ALL STOCKPILED SOIL SHALL NOT CONTAIN SLOPES GREATER THAN 2:1.
8. UPON COMPLETION OF SOIL STOCKPILING, EACH PILE SHALL BE SEEDED WITHIN 24 HOURS. PERENNIAL OR ANNUAL RYEGRASS SHALL BE PLANTED DURING SPRING, SUMMER OR EARLY FALL. WINTER RYE (CEREAL RYE) SHALL BE PLANTED DURING LATE FALL OR EARLY WINTER.
9. ALL STOCKPILES SHALL BE PROTECTED WITH SILT FENCING INSTALLED AROUND THE PERIMETER.

TEMPORARY SOIL STOCKPILE WITH SILT FENCE — 2

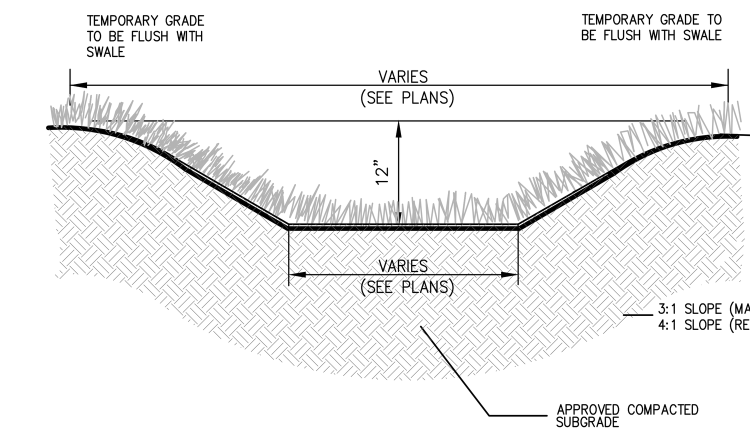

NOTES:

1. IMMEDIATELY AFTER GRADING OPERATIONS, THE TEMPORARY SWALE SHALL BE STABILIZED.
2. AREA ADJACENT TO SWALE TO BE BROUGHT TO FINISHED GRADE IMMEDIATELY AS REQUIRED, TOPSOILED, SEEDED AND MAINTAINED FOR EROSION CONTROL.

TEMPORARY DIVERSION SWALE — 3

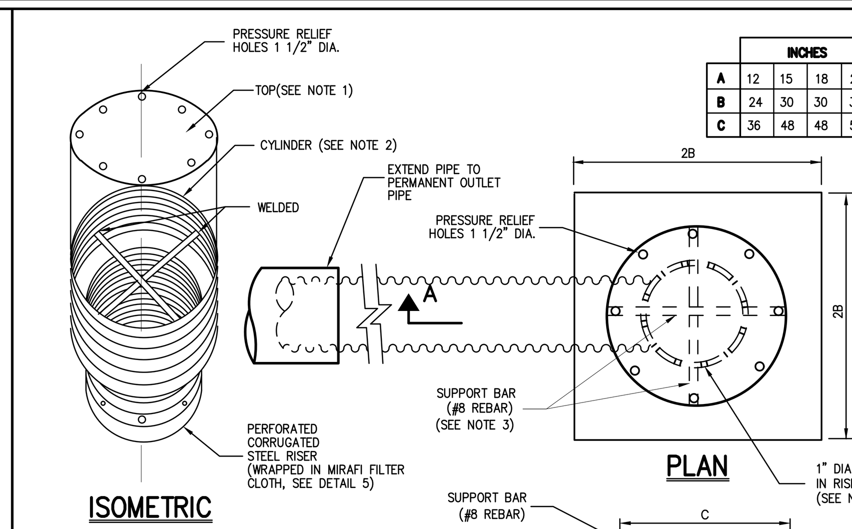

	INCHES			
A	12	15	18	24
B	24	30	30	36
C	36	48	48	54

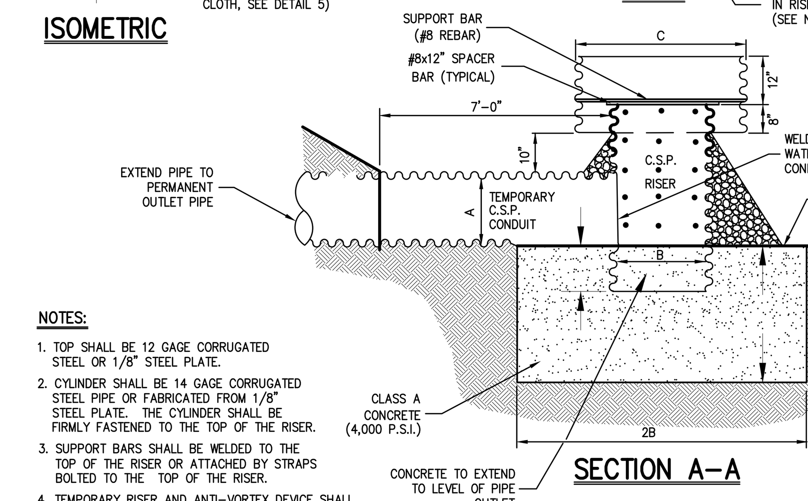

NOTES:

1. TOP SHALL BE 12 GAGE CORRUGATED STEEL OR 1/8" STEEL PLATE.
2. CYLINDER SHALL BE 14 GAGE CORRUGATED STEEL PIPE OR FABRICATED FROM 1/8" STEEL PLATE. THE CYLINDER SHALL BE FIRMLY FASTENED TO THE TOP OF THE RISER.
3. SUPPORT BARS SHALL BE WELDED TO THE TOP OF THE RISER OR ATTACHED BY STRAPS BOLTED TO THE TOP OF THE RISER.
4. TEMPORARY RISER AND ANTI–VORTEX DEVICE SHALL BE REMOVED UPON COMPLETION OF PAVEMENT AND ESTABLISHMENT OF SEEDED AREAS.
5. RISER TO BE PERFORATED WITH 1" HOLES SPACED 12" HORIZ. AND VERT. AND LOCATED IN CONCAVE PORTION OF CORRUGATIONS. PERFORATIONS SHALL NOT EXTEND BELOW INVERT ELEVATIONS OF OUTLET PIPE. WRAP RISER IN MIRAFI FW404 FILTER FABRIC OR APPROVED EQUAL AND SURROUND RISER WITH 1 1/2"–2" SIZE CRUSHED STONE.

DETENTION POND	RISER SIZE
DETENTION POND XXX	XXX

TEMPORARY RISER & ANTI–VORTEX DEVICE — 4

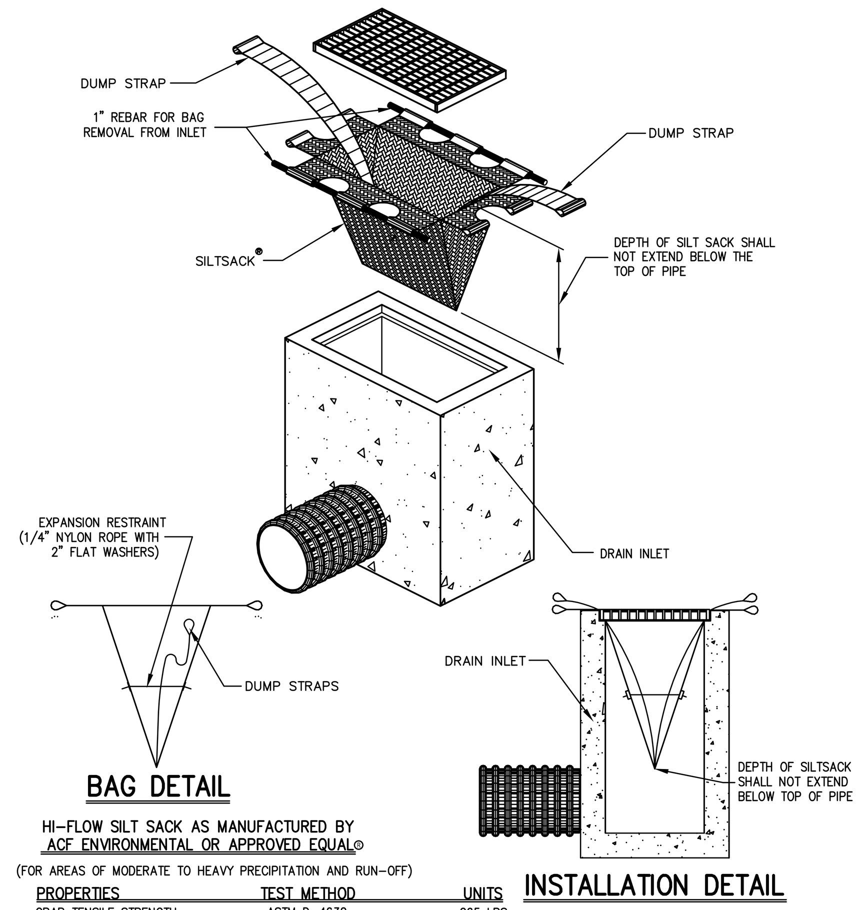

HI–FLOW SILT SACK AS MANUFACTURED BY ACF ENVIRONMENTAL OR APPROVED EQUAL©

(FOR AREAS OF MODERATE TO HEAVY PRECIPITATION AND RUN–OFF)

PROPERTIES	TEST METHOD	UNITS
GRAB TENSILE STRENGTH	ASTM D–4632	265 LBS
GRAB TENSILE ELONGATION	ASTM D–4632	20 %
PUNCTURE	ASTM D–4833	135 LBS
MULLEN BURST	ASTM D–3786	420 PSI
TRAPEZOID TEAR	ASTM D–4533	45 LBS
UV RESISTANCE	ASTM D–4355	90 %
APPARENT OPENING SIZE	ASTM D–4751	20 US SIEVE
FLOW RATE	ASTM D–4491	200 GAL/MIN/SQ FT
PERMITTIVITY	ASTM D–4491	1.5 SEC –1

NOTE:
CURB INLETS SHALL BE TYPE B WITH CURB DEFLECTOR.

MANUFACTURED INSERT INLET PROTECTION — 5

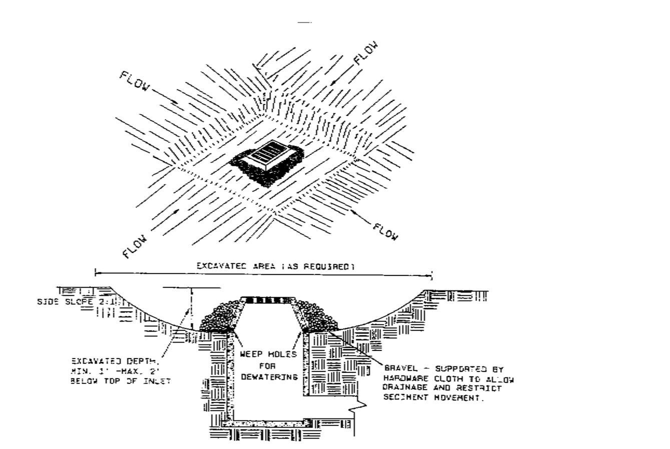

1. CLEAR THE AREA OF ALL DEBRIS THAT WILL HINDER EXCAVATION.
2. GRADE APPROACH TO THE INLET UNIFORMLY AROUND THE BASIN.
3. WEEP HOLES SHALL BE PROCTECTED BY/STONE.
4. PROVIDE FREQUENT INSPECTION AND MAINTENANCE. REMOVE ACCUMULATED SEDIMENT AND REPAIR OR REPLACE INLET PROTECTION TO MAINTAIN EFFECTIVENESS OF THE INSTALLATION.
5. UPON STABILIZATION OF CONTRIBUTING DRAINAGE AREA. SEAL WEEP HOLES FILL BASIN WITH STABLE SOIL TO FINAL GRADE. COMPACT IT PROPERLY AND STABILIZE WITH PERMANET SEEDING.

EXCAVATED DROP INLET PROTECTION — 6

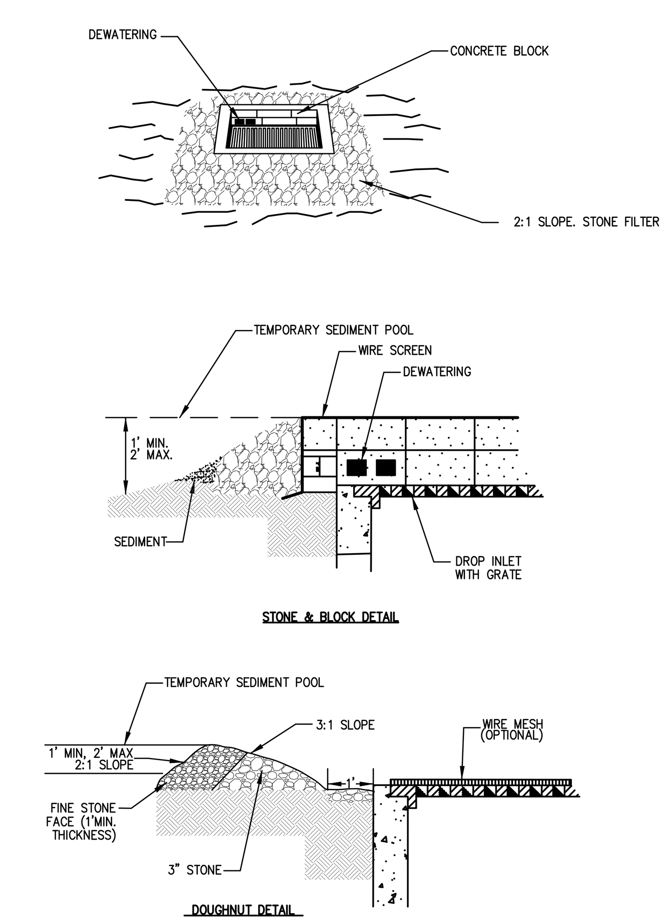

NOTES:

1. LAY ONE BLOCK ON EACH SIDE OF THE STRUCTURE ON ITS SIDE FOR DEWATERING. FOUNDATION SHALL BE 2 INCHES MINIMUM BELOW REST OF INLET AND BLOCKS SHALL BE PLACED AGAINST INLET FOR SUPPORT.
2. HARDWARE CLOTH OR 1/2" WIRE MESH SHALL BE PLACED OVER BLOCK OPENINGS TO SUPPORT STONE.
3. USE CLEAN STONE 1/2" TO 3/4" IN DIAMETER PLACED 2" BELOW THE TOP OF THE BLOCK ON A 2:1 SLOPE OR FLATTER.
4. FOR STONE STRUCTURES ONLY. A 1 FOOT THICK LAYER OF THE FILTER STONE WILL BE PLACED AGAINST THE 3" STONE AS SHOWN ON THE DRAWINGS.

STONE & BLOCK DROP INLET PROTECTION — 7

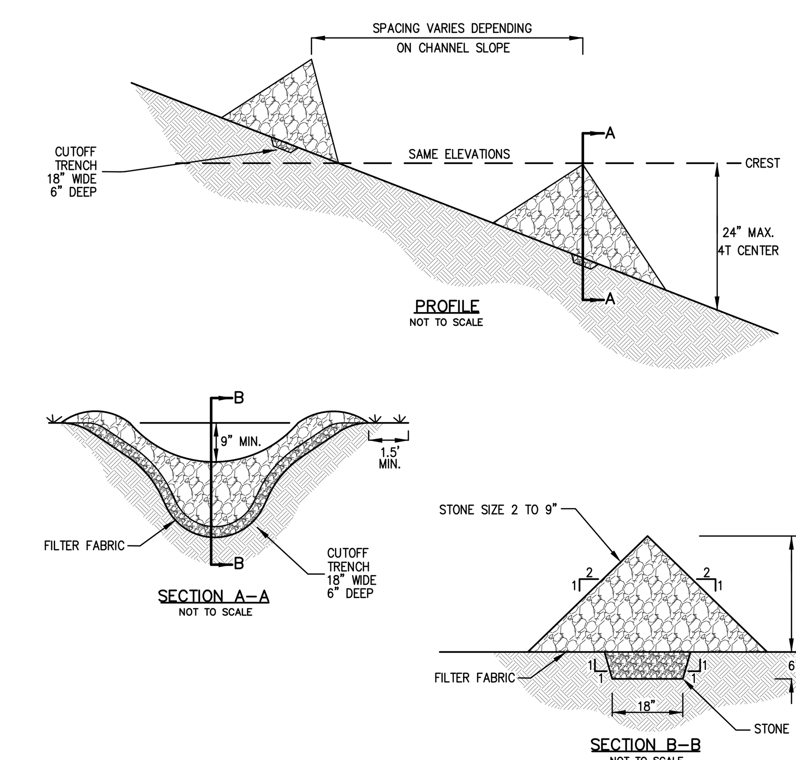

CONSTRUCTION SPECIFICATIONS:

1. STONE WILL BE PLACED ON A FILTER FABRIC FOUNDATION TO THE LINES, GRADES AND LOCATIONS SHOWN IN THE PLAN.
2. SET SPACING OF CHECK DAMS TO ASSURE THAT THE ELEVATIONS OF THE CREST OF THE DOWNSTREAM DAM IS AT THE SAME ELEVATION OF THE TOE OF THE UPSTREAM DAM.
3. EXTEND THE STONE A MINIMUM OF 1.5 FEET BEYOND THE DITCH BANK TO PREVENT CUTTING AROUND THE DAM.
4. PROTECT THE CHANNEL DOWNSTREAM OF THE LOWEST CHECK DAM FROM SCOUR AND EROSION WITH STONE OR LINER AS APPROPRIATE.
5. ENSURE THAT CHANNEL APPURTENANCES SUCH AS CULVERT ENTRANCES BELOW CHECK DAMS ARE NOT SUBJECT TO DAMAGE OR BLOCKAGE FROM DISPLACED STONES.

MAXIMUM DRAINAGE AREA 2 ACRES.

STONE CHECK DAM — 8

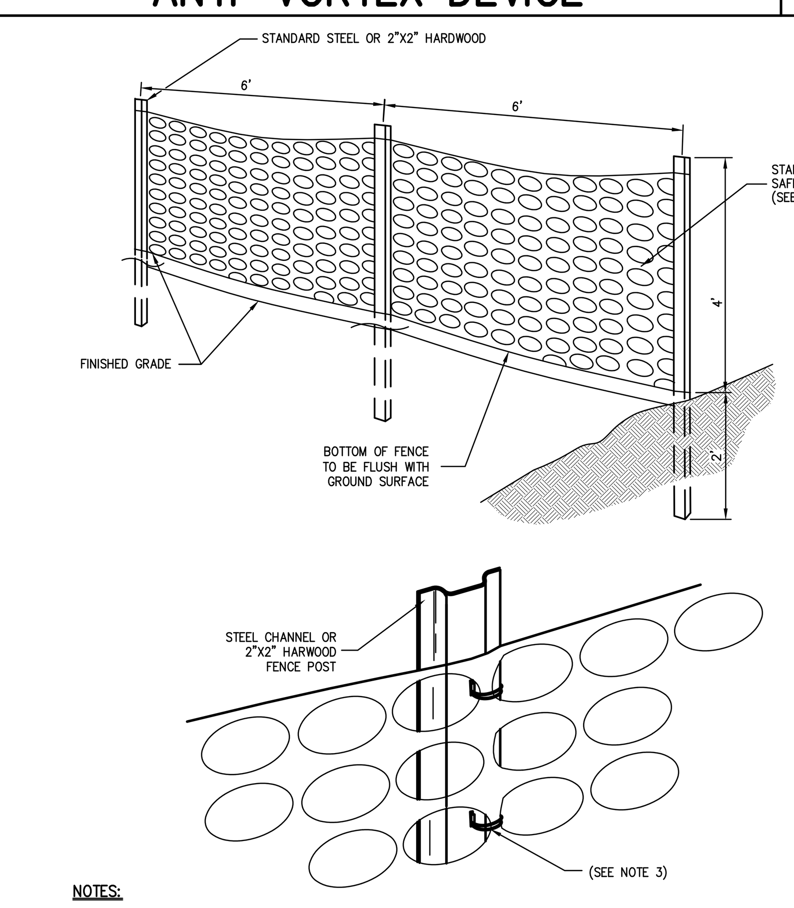

NOTES:

1. SPACE SUPPORT FENCE POSTS AT 6 FOOT INTERVALS.
2. DRIVE SUPPORT POSTS 2 FEET INTO GROUND.
3. FIRMLY FASTEN FENCE MATERIAL IN PLACE BY WIRING TO FENCE POST WHILE MAINTAINING TENSION ACROSS FULL HEIGHT OF FENCE. WIRING SHALL BE DONE IN A MANNER THAT WILL PREVENT SAGGING OF FENCE MATERIAL.
4. PROVIDE PERIODIC INSPECTION AND MAINTENANCE OF FENCE INCLUDING REPAIRS AS NECESSARY AND REQUIRED.
5. PLASTIC FENCE SHALL BE INTERNATIONAL ORANGE COLOR, AS MANUFACTURED BY ADPI ENTERPRISES, INC. OR APPROVED EQUAL.
6. REMOVE CONSTRUCTION FENCE AS DIRECTED BY THE OWNER'S FIELD REPRESENTATIVE.

CONSTRUCTION FENCE — 9

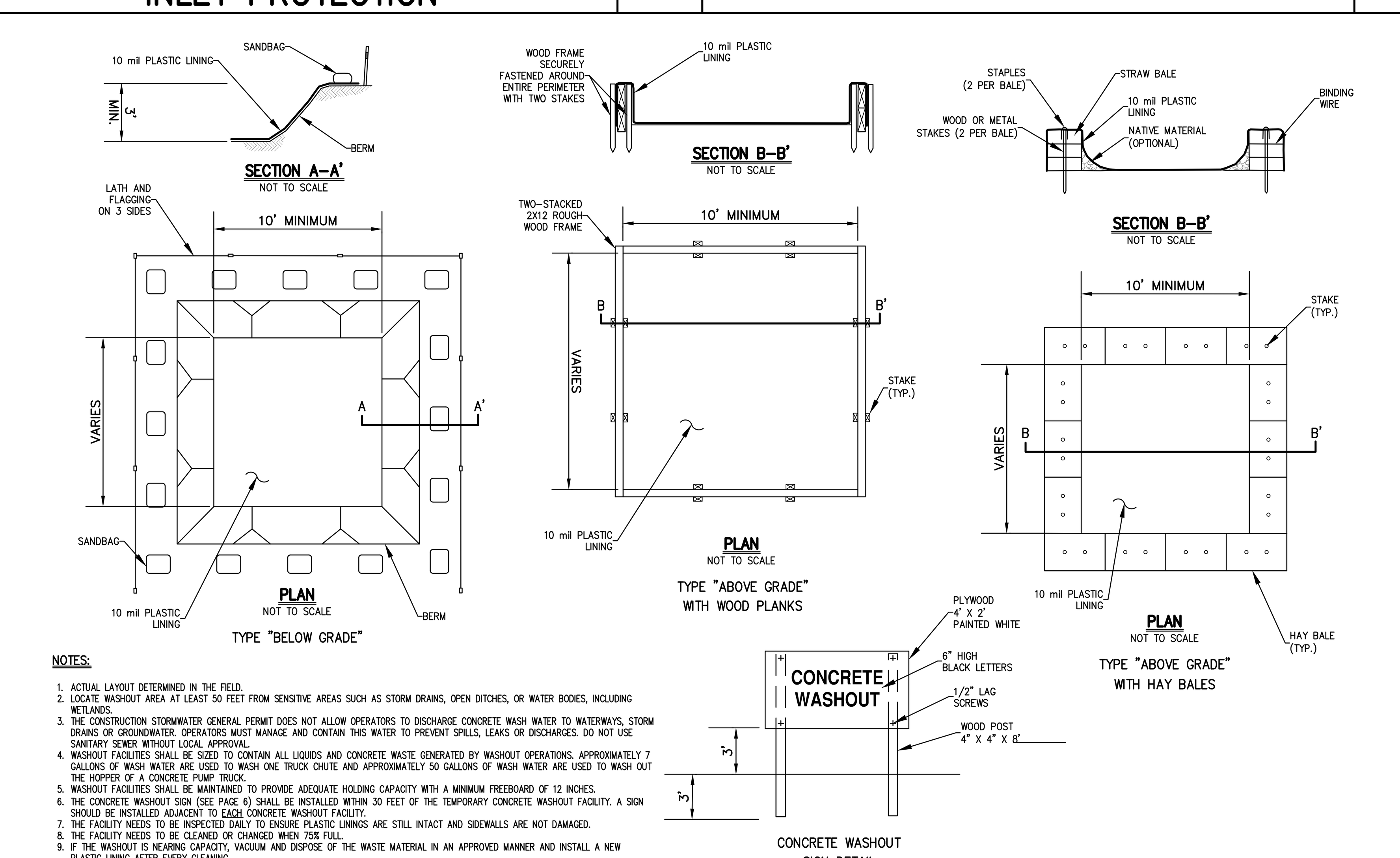

NOTES:

1. ACTUAL LAYOUT DETERMINED IN THE FIELD.
2. LOCATE WASHOUT AREA AT LEAST 50 FEET FROM SENSITIVE AREAS SUCH AS STORM DRAINS, OPEN DITCHES, OR WATER BODIES, INCLUDING WETLANDS.
3. THE CONSTRUCTION STORMWATER GENERAL PERMIT DOES NOT ALLOW OPERATORS TO DISCHARGE CONCRETE WASH WATER TO WATERWAYS, STORM DRAINS OR GROUNDWATER. OPERATORS MUST MANAGE AND CONTAIN THIS WATER TO PREVENT SPILLS, LEAKS OR DISCHARGES. DO NOT USE SANITARY SEWER WITHOUT LOCAL APPROVAL.
4. WASHOUT FACILITIES SHALL BE SIZED TO CONTAIN ALL LIQUIDS AND CONCRETE WASTE GENERATED BY WASHOUT OPERATIONS. APPROXIMATELY 7 GALLONS OF WASH WATER ARE USED TO WASH ONE TRUCK CHUTE AND APPROXIMATELY 50 GALLONS OF WASH WATER ARE USED TO WASH OUT THE HOPPER OF A CONCRETE PUMP TRUCK.
5. WASHOUT FACILITIES SHALL BE MAINTAINED TO PROVIDE ADEQUATE HOLDING CAPACITY WITH A MINIMUM FREEBOARD OF 12 INCHES.
6. THE CONCRETE WASHOUT SIGN (SEE PAGE 6) SHALL BE INSTALLED WITHIN 30 FEET OF THE TEMPORARY CONCRETE WASHOUT FACILITY. A SIGN SHOULD BE INSTALLED ADJACENT TO EACH CONCRETE WASHOUT FACILITY.
7. THE FACILITY NEEDS TO BE INSPECTED DAILY TO ENSURE PLASTIC LININGS ARE STILL INTACT AND SIDEWALLS ARE NOT DAMAGED.
8. THE FACILITY NEEDS TO BE CLEANED OR CHANGED WHEN 75% FULL.
9. IF THE WASHOUT IS NEARING CAPACITY, VACUUM AND DISPOSE OF THE WASTE MATERIAL IN AN APPROVED MANNER AND INSTALL A NEW PLASTIC LINING AFTER EVERY CLEANING.
10. PLACE A SECURE, NON–COLLAPSING, NON–WATER COLLECTING COVER OVER THE CONCRETE WASHOUT FACILITY PRIOR TO PREDICTED WET WEATHER.

CONCRETE WASHOUT — 10

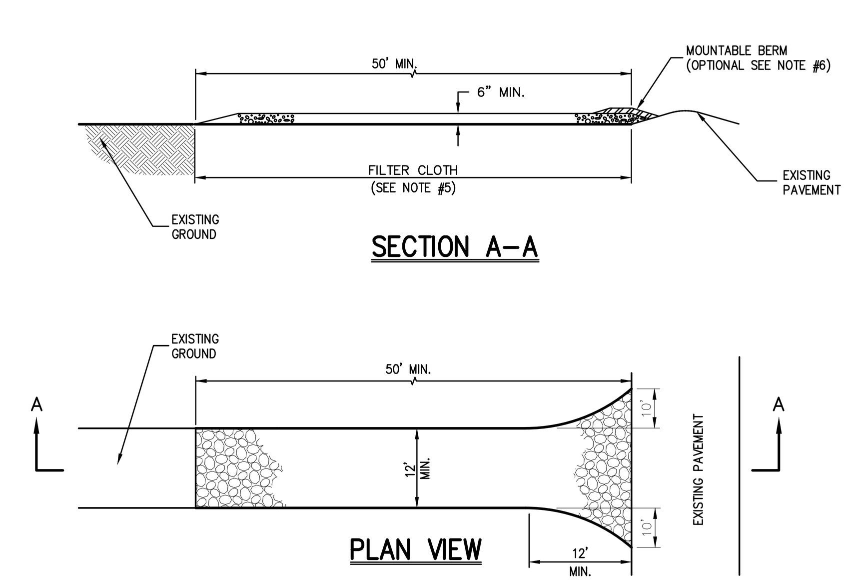

NOTES

1. STONE SIZE – USE 1" TO 4" STONE, OR RECLAIMED OR RECYCLED CONCRETE EQUIVALENT.
2. LENGTH – AS REQUIRED, BUT NOT LESS THAN 50 FEET.
3. THICKNESS – NOT LESS THAN SIX (6) INCHES.
4. WIDTH – 12 FOOT MINIMUM, BUT NOT LESS THAN THE FULL WIDTH AT POINTS WHERE INGRESS OR EGRESS OCCURS. 24 FOOT MINIMUM IF SINGLE ENTRANCE TO SITE.
5. FILTER CLOTH TO BE PLACED OVER THE ENTIRE WIDTH AND LENGTH OF AREA PRIOR TO PLACING OF STONE.
6. SURFACE WATER – ALL SURFACE WATER FLOWING OR DIVERTED TOWARD CONSTRUCTION ENTRANCES SHALL BE PIPED BENEATH THE ENTRANCE. IF PIPING IS IMPRACTICAL, A MOUNTABLE BERM WITH 5:1 SLOPES WILL BE PERMITTED.
7. MAINTENANCE – THE ENTRANCE SHALL BE MAINTAINED IN A CONDITION WHICH WILL PREVENT TRACKING OR FLOWING OF SEDIMENT ONTO PUBLIC RIGHTS–OF–WAY. THIS MAY REQUIRE PERIODIC TOP DRESSING WITH ADDITIONAL STONE AS CONDITIONS DEMAND AND REPAIR AND/OR CLEANOUT OF ANY MEASURE USED TO TRAP SEDIMENT. ALL SEDIMENT SPILLED, DROPPED, WASHED OR TRACKED ONTO PUBLIC RIGHTS–OF–WAY MUST BE REMOVED IMMEDIATELY.
8. WASHING – WHEELS SHALL BE CLEANED TO REMOVE SEDIMENT PRIOR TO ENTRANCE ONTO PUBLIC RIGHTS–OF–WAY. WHEN WASHING IS REQUIRED, IT SHALL BE DONE ON AN AREA STABILIZED WITH STONE AND WHICH DRAINS INTO AN APPROVED SEDIMENT TRAPPING DEVICE.
9. PERIODIC INSPECTION AND NEEDED MAINTENANCE SHALL BE PROVIDED AFTER EACH RAIN.

STABILIZED CONSTRUCTION ACCESS — 11

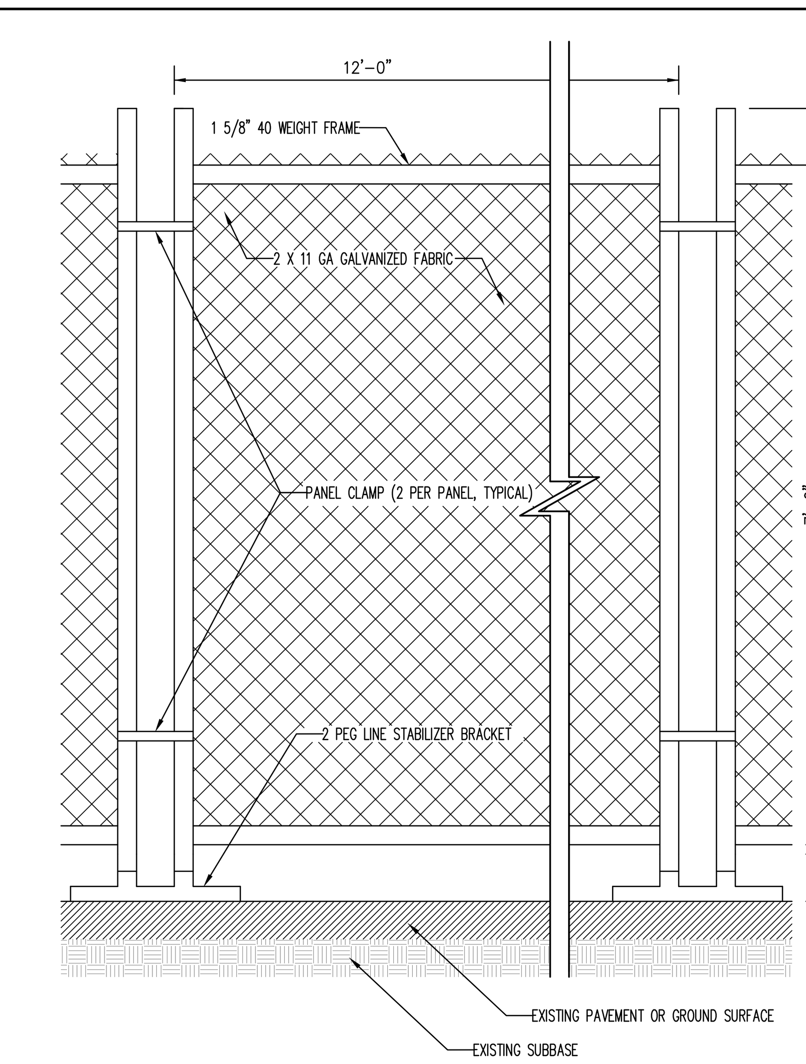

NOTE:
STABILIZED BRACKET TO BE HOT DIPPED GALVANIZED STEEL PIPE.

TEMPORARY CHAIN LINK CONSTRUCTION FENCE — 12

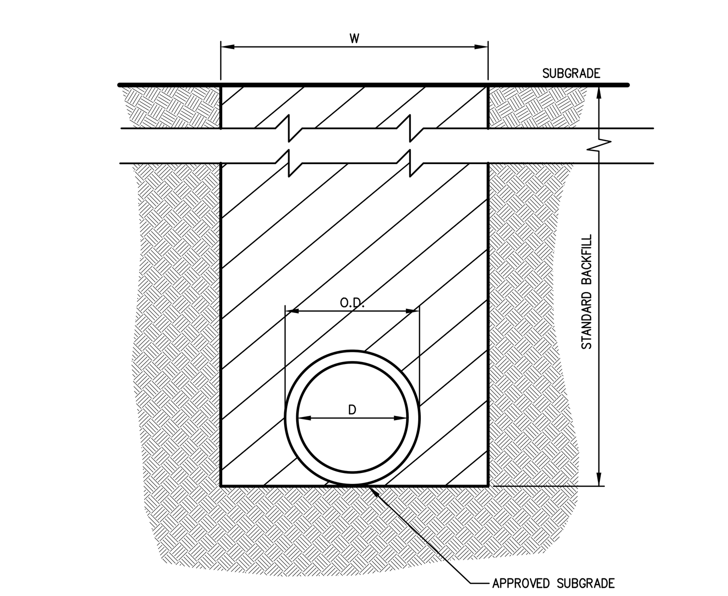

D=INSIDE DIAMETER, SPAN, OR RISE
O.D.=OUTSIDE BARREL DIAMETER, SPAN OR RISE
H.D.=OUTSIDE DIAMETER, SPAN, OR RISE @ BELL OR BAND
W=H.D. + 2.0' – FOR 48" OR SMALLER DIAMETER, SPAN, OR RISE
W=H.D. + 2.5' – FOR GREATER THAN 48" DIAMETER, SPAN, OR RISE

NOTES:

1. IN FILL AREAS, EMBANKMENTS SHALL BE CONSTRUCTED TO A MAXIMUM OF 2 FEET ABOVE TOP OF PIPE BEFORE EXCAVATING TRENCH.
2. FOR CORRUGATED POLYETHYLENE DRAIN PIPE (CPDP) INSTALLATION AND POLYVINYL CHLORIDE (PVC) PIPE AND CONDUIT INSTALLATION, USE TYPE II TRENCH.
3. BACKFILL FOR PIPE SHALL BE PLACED EVENLY AND CAREFULLY AROUND AND OVER THE PIPE OR CONDUIT IN SIX (6) INCH MAXIMUM LAYERS. EACH LAYER SHALL BE THOROUGHLY AND CAREFULLY COMPACTED UNTIL TWELVE (12) INCHES OF COVER EXISTS OVER THE PIPE OR CONDUIT. THE REMAINDER OF THE BACKFILL MAY THEN BE PLACED AND COMPACTED IN A MAXIMUM OF TWELVE (12) INCH LAYERS. EACH LAYER SHALL BE COMPACTED BY APPROVED MECHANICAL TAMPING MACHINES. UNLESS OTHERWISE SPECIFIED BACKFILL SHALL BE COMPACTED TO NOT LESS THAN 92% MAXIMUM MODIFIED DENSITY IN ACCORDANCE WITH ASTM DESIGNATION D–1557 IN THE MANNER HEREIN DESCRIBED. BACKFILL SHALL PROCEED UP TO THE LINES AND GRADES AS SHOWN ON THE DRAWINGS.

TYPE I TRENCH — 13
(FLAT BOTTOM)

No.	Revision	Date	By

Previous Editions Obsolete

APPLICANT:
FARRELL BUILDING COMPANY
2317 MONTAUK HIGHWAY
BRIDGEHAMPTON, NY 11932

JMC Planning, Engineering, Landscape Architecture & Land Surveying, PLLC
JMC Site Development Consultants, LLC
John Meyer Consulting, Inc.
120 BEDFORD ROAD • ARMONK, NY 10504
voice 914.273.5225 • fax 914.273.2102
www.jmcpllc.com

CONSTRUCTION DETAILS

FARRELL INDUSTRIAL PARK
ROUTE 300
TOWN OF NEWBURGH, NY

ANY ALTERATION OF PLANS, SPECIFICATIONS, PLATS AND REPORTS BEARING THE SEAL OF A LICENSED PROFESSIONAL ENGINEER OR LICENSED LAND SURVEYOR IS A VIOLATION OF SECTION 7209 OF THE NEW YORK STATE EDUCATION LAW, EXCEPT AS PROVIDED FOR BY SECTION 7209, SUBSECTION 2.

Drawn: TC	Approved: DL/JS
Scale:	NOT TO SCALE
Date:	12/03/2020
Project No:	18156
18156–DETAILS	C–900
Drawing No:	C–900

COPYRIGHT © 2020 by JMC All Rights Reserved. No part of this document may be reproduced, stored in a retrieval system, or transmitted in any form or by means, electronic, mechanical, photocopying, recording or otherwise, without the prior written permission of JMC PLANNING, ENGINEERING, LANDSCAPE ARCHITECTURE & LAND SURVEYING, PLLC | JMC SITE DEVELOPMENT CONSULTANTS, LLC | JOHN MEYER CONSULTING, INC. (JMC). Any modifications or alterations to this document without the written permission of JMC shall render them invalid and unusable.

NOT FOR CONSTRUCTION

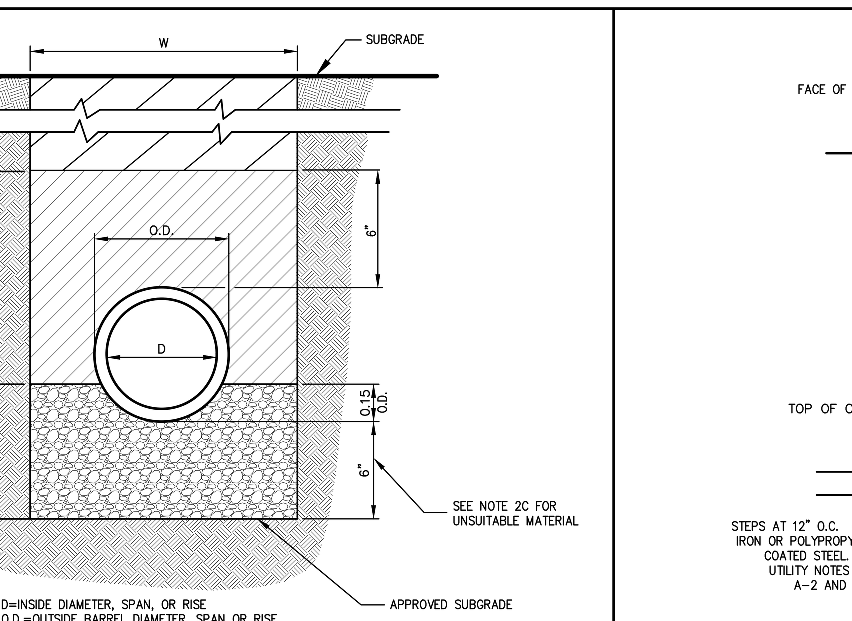

D=INSIDE DIAMETER, SPAN, OR RISE
O.D.=OUTSIDE BARREL DIAMETER, SPAN OR RISE
H.D.=OUTSIDE DIAMETER, SPAN, OR RISE @ BELL OR BAND
W=H.D. + 2.0' – FOR 48" OR SMALLER DIAMETER, SPAN, OR RISE
W=H.D. + 2.5' – FOR GREATER THAN 48" DIAMETER, SPAN, OR RISE

NOTES:

1. FOR TYPE II TRENCH, MATERIAL FOR SELECT BEDDING AND SELECT BACKFILL SHALL BE:
   A. EITHER SAND OR CRUSHED STONE IF NO WATER IS ENCOUNTERED IN TRENCH.
   B. 3/4"CRUSHED STONE IF WATER IS ENCOUNTERED IN TRENCH.
2. TYPE II TRENCH SHALL BE USED IN ALL OF THE FOLLOWING CASES:
   A. FOR ALL CORRUGATED POLYETHYLENE DRAIN PIPE (CPDP) AND PVC PIPE AND CONDUIT INSTALLATION.
   B. WHEN ROCK OR HARDPAN IS ENCOUNTERED IN BOTTOM OF TRENCH.
   C. WHEN UNSUITABLE MATERIAL IS ENCOUNTERED IN BOTTOM OF TRENCH. IN SUCH CASE DEPTH OF UNDERCUTTING SHALL BE AS DIRECTED BY THE ENGINEER WITH 6" MINIMUM.
3. FOR ALL TRENCH EXCAVATION IN FILL AREAS, ALL EMBANKMENTS SHALL BE CONSTRUCTED TO A MINIMUM OF 2 FEET ABOVE THE OUTSIDE TOP (AT THE BELL) OF THE PIPE PRIOR TO BEGINNING ANY TRENCH EXCAVATION.
4. BACKFILL FOR PIPE AND CONDUIT SHALL BE PLACED EVENLY AND CAREFULLY AROUND AND OVER THE PIPE OR CONDUIT IN SIX (6) INCH MAXIMUM LAYERS. EACH LAYER SHALL BE THOROUGHLY AND CAREFULLY COMPACTED UNTIL TWELVE (12) INCHES OF COVER EXISTS OVER THE PIPE OR CONDUIT. THE REMAINDER OF THE BACKFILL MAY THEN BE PLACED AND COMPACTED IN A MAXIMUM OF TWELVE (12) INCH LAYERS. EACH LAYER SHALL BE COMPACTED BY APPROVED MECHANICAL TAMPING MACHINES. UNLESS OTHERWISE SPECIFIED BACKFILL SHALL BE COMPACTED TO NOT LESS THAN 92% MAXIMUM MODIFIED DENSITY IN ACCORDANCE WITH ASTM DESIGNATION D-1557 IN THE MANNER HEREIN DESCRIBED. BACKFILL SHALL PROCEED UP TO THE LINES AND GRADES AS SHOWN ON THE DRAWINGS.

TYPE II TRENCH — 14

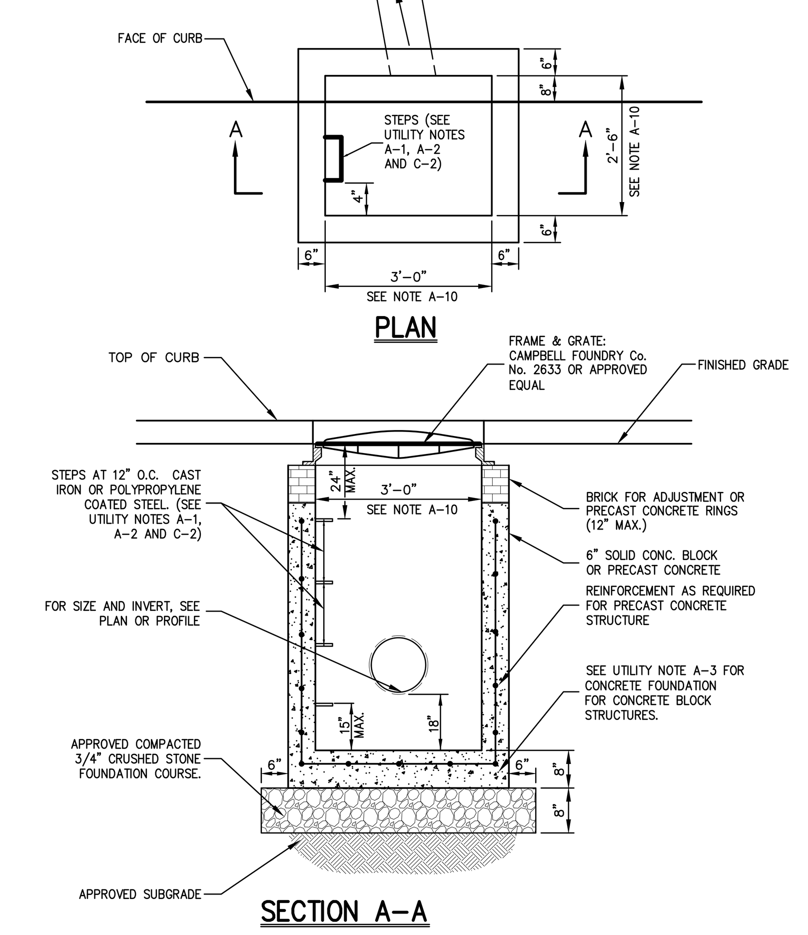

NOTE:

1. SEE NOTES PERTAINING TO DRAIN INLETS UNDER UTILITY NOTES ON DRAWING SP-06

DRAIN INLET (TYPE CI) — 15

(WITH SUMP-W/O FINGER UNDERDRAINS)

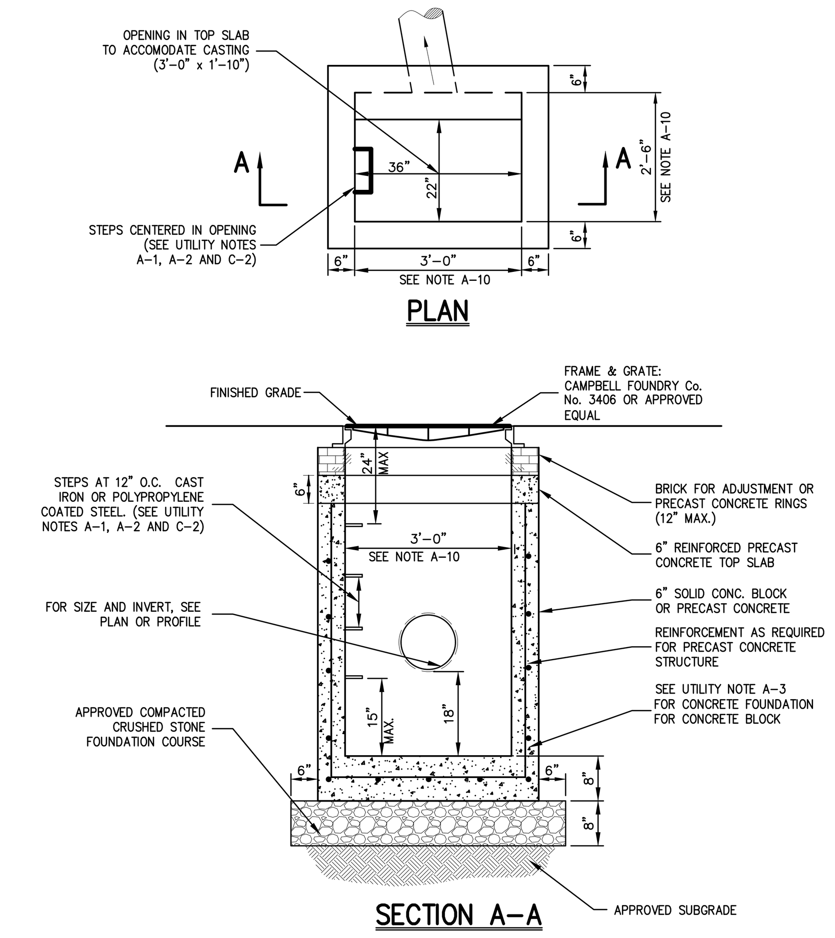

NOTE

1. REINFORCE PRECAST CONCRETE TOP SLAB AND REINFORCE PRECAST CONCRETE STRUCTURE SHALL BE DESIGNED TO ACCOMMODATE AN H-20 DESIGN LOAD.
2. SEE NOTES PERTAINING TO DRAIN INLETS UNDER UTILITY NOTES ON DRAWING #XX

DRAIN INLET (TYPE DI) — 16

(WITH SUMP-W/O FINGER UNDERDRAINS)

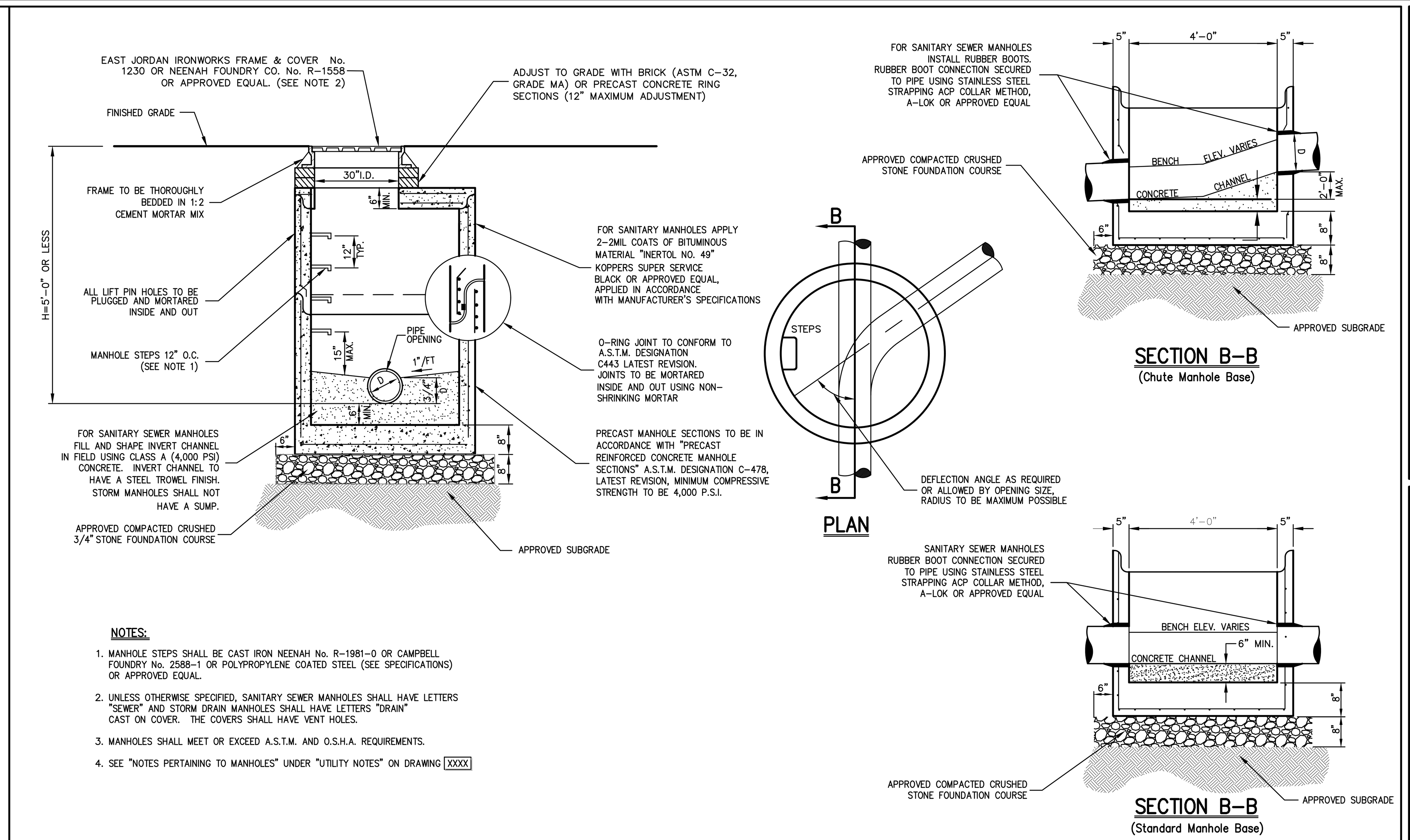

NOTES:

1. MANHOLE STEPS SHALL BE CAST IRON NEENAH No. R-1981-0 OR CAMPBELL FOUNDRY No. 2588-1 OR POLYPROPYLENE COATED STEEL (SEE SPECIFICATIONS) OR APPROVED EQUAL.
2. UNLESS OTHERWISE SPECIFIED, SANITARY SEWER MANHOLES SHALL HAVE LETTERS "SEWER" AND STORM DRAIN MANHOLES SHALL HAVE LETTERS "DRAIN" CAST ON COVER. THE COVERS SHALL HAVE VENT HOLES.
3. MANHOLES SHALL MEET OR EXCEED A.S.T.M. AND O.S.H.A. REQUIREMENTS.
4. SEE "NOTES PERTAINING TO MANHOLES" UNDER "UTILITY NOTES" ON DRAWING XXXX

MANHOLE (TYPE A) — 17

(H < 5'-0")

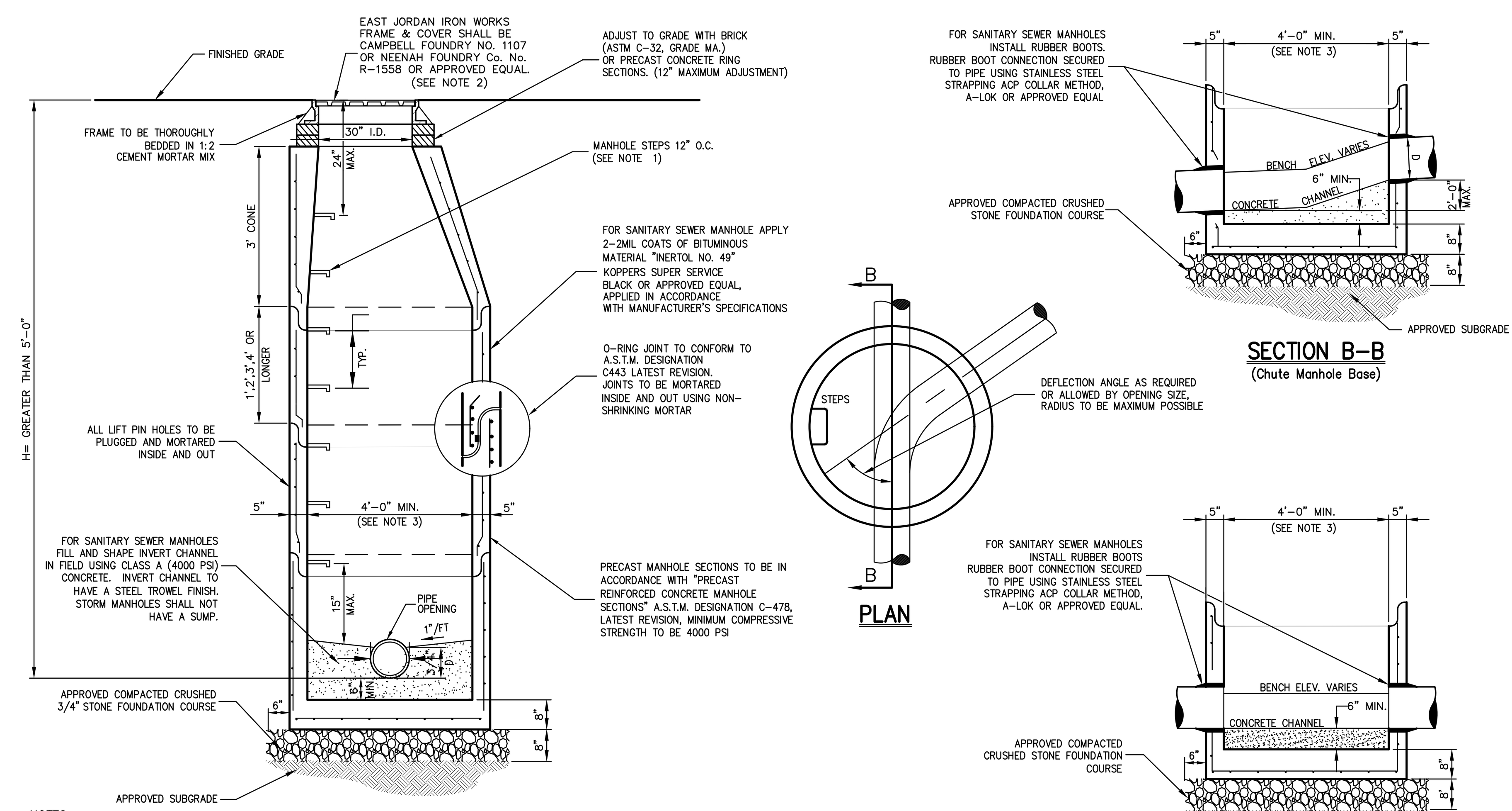

NOTES:

1. MANHOLE STEPS SHALL BE CAST IRON NEENAH No. R-1981-0 OR CAMPBELL FOUNDRY No. 2588-1 OR POLYPROPYLENE COATED STEEL (SEE SPECIFICATIONS) OR APPROVED EQUAL.
2. UNLESS OTHERWISE SPECIFIED, SANITARY SEWER MANHOLES SHALL HAVE LETTERS "SEWER" AND STORM DRAIN MANHOLES SHALL HAVE LETTERS "DRAIN" CAST ON COVER. THE COVERS SHALL HAVE VENT HOLES.
3. MANHOLES WITH DEPTH (h) 10' OR GREATER SHALL BE FIVE (5) FEET IN DIAMETER.
4. MANHOLES SHALL MEET OR EXCEED A.S.T.M. AND O.S.H.A. REQUIREMENTS.
5. SEE "NOTES PERTAINING TO MANHOLES" UNDER "UTILITY NOTES" ON DRAWING XXXX

MANHOLE (TYPE B) — 18

(H > 5'-0" < 10'-0")

NOTES PERTAINING TO DRAIN INLETS

A-1 STEPS WILL NOT BE REQUIRED IN INLETS LESS THAN FOUR (4) FEET IN DEPTH. STEPS WILL BE REQUIRED IN INLETS FOUR (4) FEET OR GREATER IN DEPTH. DEPTHS FOR DRAIN INLETS SHALL BE MEASURED FROM FINISHED GRADE TO INSIDE BOTTOM OF STRUCTURE (INCLUDING SUMP AS APPLICABLE).

A-2 WHEN STEPS ARE REQUIRED, STEPS SHALL COMPLY WITH THE SAME REQUIREMENTS OF ASTM STANDARD C-478, ARTICLE 13 ENTITLED "MANHOLE STEPS & LADDERS".

A-3 FOR MASONRY STRUCTURES, THE FIRST COURSE OF MASONRY SHALL BE SET IN THE CONCRETE FOUNDATION BEFORE THE CONCRETE HAS SET. CONCRETE FOUNDATION SHALL BE CLASS "A"(4000 psi) CONCRETE, TWELVE (12) INCHES THICK AND SHALL EXTEND SIX (6) INCHES BEYOND THE OUTSIDE FACE THE STRUCTURE.

A-4 IT SHALL BE THE CONTRACTOR'S RESPONSIBILITY TO FURNISH AND CONSTRUCT THE PROPER SIZE STRUCTURE INCLUDING THE NECESSARY OPENINGS TO ACCOMMODATE THE WORK AS SHOWN ON THE PLANS OR ORDERED BY THE ENGINEER, AT NO ADDITIONAL COST TO THE OWNER.

A-5 ALL NECESSARY PATCHING FOR DRAIN STRUCTURES SHALL BE ACCOMPLISHED WITH NON-SHRINKING CEMENT MORTAR GROUT, APPROVED EQUAL TO SIKA-SET AS MANUFACTURED BY THE SIKA CHEMICAL CORP.

A-6 FOUNDATIONS FOR PRECAST CONCRETE STRUCTURES SHALL BE SET ON A COMPACTED LAYER OF APPROVED CRUSHED STONE HAVING A MINIMUM COMPACTED THICKNESS OF EIGHT (8) INCHES.

A-7 ALL PIPES SHALL BE CUT FLUSH WITH THE INSIDE WALL OF THE STRUCTURE.

A-8 PROVIDE REINFORCED CONCRETE TOP SLAB FOR OVERSIZED DRAIN INLETS WITH PROPER SIZE OPENING TO ACCOMMODATE INSTALLATION OF FRAME & GRATE.

A-9 FOR MASONRY STRUCTURES GREATER THAN TEN (10) FEET IN DEPTH, THICKNESS OF MASONRY WALLS SHALL BE INCREASED TO TWELVE (12) INCHES.

A-10 FOR ALL STRUCTURES GREATER THAN 10 FEET IN DEPTH, STRUCTURES SHALL PROVIDE MINIMUM INSIDE DIMENSIONS OF 4 FEET X 4 FEET.

NOTES PERTAINING TO MANHOLES

B-1 PRECAST CONCRETE MANHOLES SHALL COMPLY WITH ASTM STANDARD C-478. MANHOLE JOINTS SHALL COMPLY WITH ASTM STANDARD C-443.

B-2 FOR PRECAST CONCRETE MANHOLES FIVE (5) FEET OR LESS IN HEIGHT, TOP CONE SECTION SHALL BE REPLACED WITH PRECAST REINFORCED CONCRETE SLAB (6" MIN. THICKNESS) WITH OPENING OF SUFFICIENT SIZE TO ACCOMMODATE MANHOLE CASTING.

B-3 FOR MANHOLES 10 FEET OR MORE IN DEPTH, MANHOLE DIAMETER SHALL BE FIVE (5) FEET.

B-4 TERMINAL MANHOLE FLOORS SHALL BE SLOPED TOWARD OUTFALL PIPE.

B-5 INVERT CHANNELS FOR PRECAST CONCRETE MANHOLES SHALL BE CONSTRUCTED OF CONCRETE.

B-6 NOTES A-1, A-2, A-4, A-5, A-6 & A-7 UNDER "NOTES PERTAINING TO DRAIN INLETS" ABOVE SHALL APPLY TO MANHOLES.

NOTES PERTAINING TO PRECAST CONCRETE STRUCTURES FOR STORM DRAINS, SANITARY SEWERS AND WATER LINES

C-1 ALL PRECAST CONCRETE STRUCTURES SHALL BE DESIGNED TO ACCOMMODATE AN H-20 DESIGN LOAD.

C-2 STEPS SHALL BE LOCATED WITHIN STRUCTURE TO AVOID PLACEMENT OVER PIPES WHEN PRACTICABLE.

UTILITY NOTES — 19

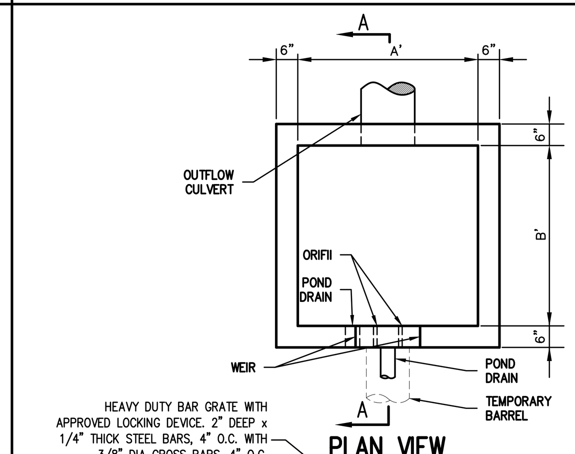

STRUCTURE CHART

BASIN No.	STRUCTURE No.	STRUCTURE SIZE A' x B'	STRUCTURE HEIGHT H'	(TG) TOP GRATE	RECT. WEIR (W) LENGTH	RECT. WEIR (W) ELEV.	CIRCULAR ORIFICE (01) DIA.	CIRCULAR ORIFICE (01) INVERT ELEV.	CIRCULAR ORIFICE (02) DIA.	CIRCULAR ORIFICE (02) INVERT ELEV.	OUTLET CULVERT (CV) DIA.	OUTLET CULVERT (CV) INVERT ELEV.	POND DRAIN (PD) DIA.	POND DRAIN (PD) INVERT ELEV.	TEMPORARY (TP) DIA.	TEMPORARY (TP) INVERT ELEV.
1A-1	OCS-G-2-1	5.00'X5.00'	5.5	416	5'	414.3	N/A	N/A	N/A	N/A	15"	412	4"	412	N/A	N/A
1A-2	OCS-G-5	5.00'X5.00'	5.5	424	5'	414.3	N/A	N/A	N/A	N/A	15"	420	4"	420	N/A	N/A
2C-1	OCS-A-2	5.00'X5.00'	7.5	420	5'	418.75	3"	418	N/A	N/A	15"	420	4"	420	N/A	N/A

NOTES:

1. PRECAST CONCRETE STRUCTURE SHALL BE DESIGNED TO ACCOMMODATE AN H-20 DESIGN LOAD.
2. UNDERDRAINS SHALL BE INSTALLED IN BASIN NOS. ☐ WHERE AND AS SHOWN IN THE PLANS. UNDERDRAINS ARE NOT REQUIRED IN BASIN NOS. ☐ SEE DETAIL ☐.
3. SEE UTILITY NOTES A-4 TO A-7.

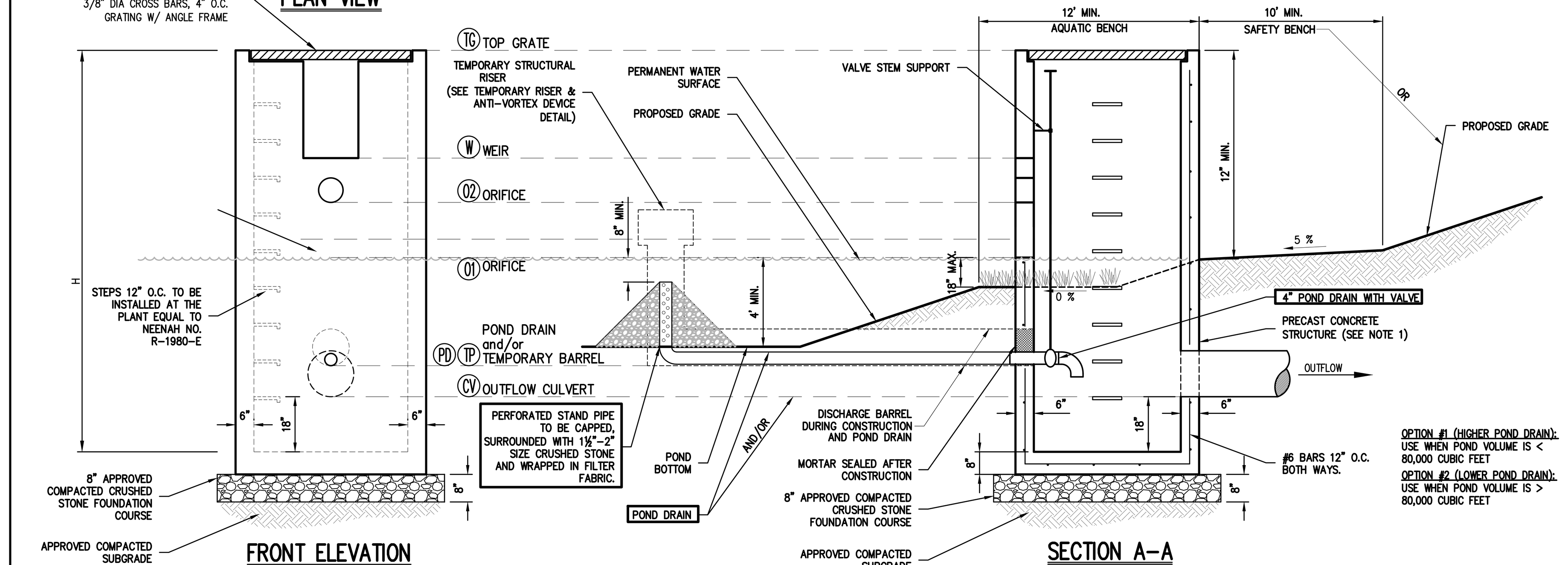

OUTLET CONTROL STRUCTURE — 20

CDS2015-4-C DESIGN NOTES

CDS2015-4-C RATED TREATMENT CAPACITY IS 0.7 CFS [19.8 L/s], OR PER LOCAL REGULATIONS. MAXIMUM HYDRAULIC INTERNAL BYPASS CAPACITY IS 10.0 CFS [283 L/s]. IF THE SITE CONDITIONS EXCEED 10.0 [283 L/s] CFS, AN UPSTREAM BYPASS STRUCTURE IS REQUIRED.

THE STANDARD CDS2015-4-C CONFIGURATION IS SHOWN. ALTERNATE CONFIGURATIONS ARE AVAILABLE AND ARE LISTED BELOW. SOME CONFIGURATIONS MAY BE COMBINED TO SUIT SITE REQUIREMENTS.

CONFIGURATION DESCRIPTION
GRATED INLET ONLY (NO INLET PIPE)
GRATED INLET WITH INLET PIPE OR PIPES
CURB INLET ONLY (NO INLET PIPE)
CURB INLET WITH INLET PIPE OR PIPES
SEPARATE OIL BAFFLE (SINGLE INLET PIPE REQUIRED FOR THIS CONFIGURATION)
SEDIMENT WEIR FOR NJDEP / NJCAT CONFORMING UNITS

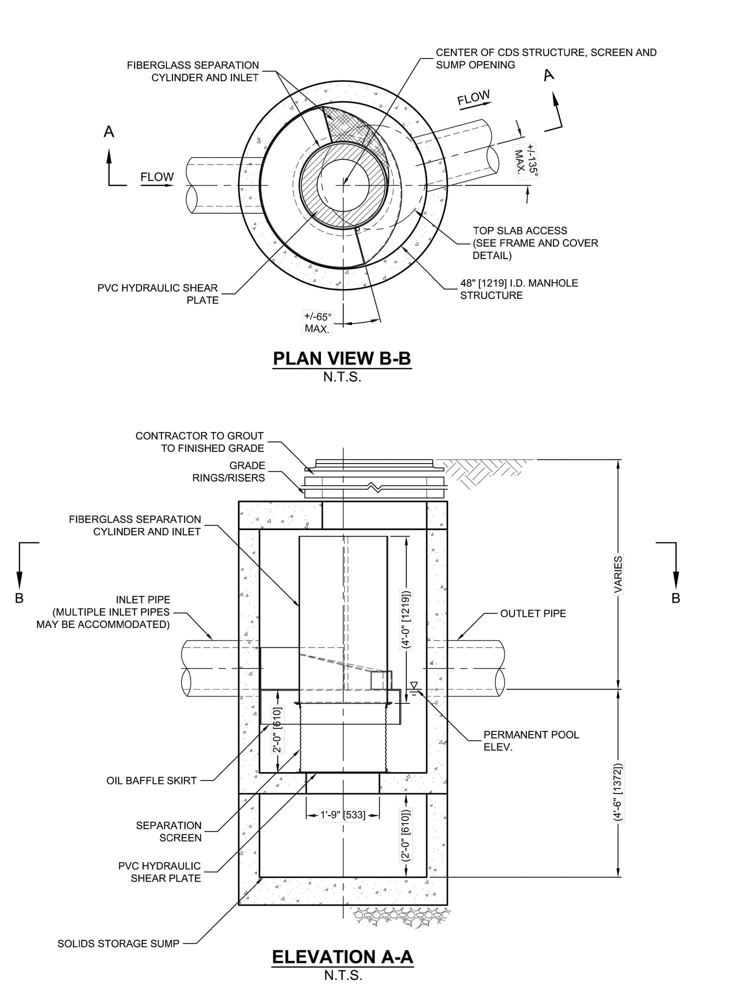

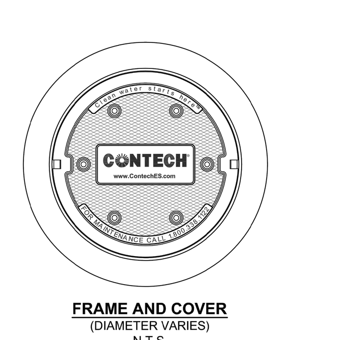

FRAME AND COVER
(DIAMETER VARIES)
N.T.S.

SITE SPECIFIC DATA REQUIREMENTS

STRUCTURE ID			
WATER QUALITY FLOW RATE (CFS OR L/s)			*
PEAK FLOW RATE (CFS OR L/s)			*
RETURN PERIOD OF PEAK FLOW (YRS)			*
SCREEN APERTURE (2400 OR 4700)			*
PIPE DATA:	I.E.	MATERIAL	DIAMETER
INLET PIPE 1	408.57	HDPE	15"
INLET PIPE 2	408.57	HDPE	15"
OUTLET PIPE	408.57	HDPE	15"
RIM ELEVATION			*
ANTI-FLOTATION BALLAST		WIDTH	HEIGHT
		*	*
NOTES/SPECIAL REQUIREMENTS:			

* PER ENGINEER OF RECORD

GENERAL NOTES

1. CONTECH TO PROVIDE ALL MATERIALS UNLESS NOTED OTHERWISE.
2. DIMENSIONS MARKED WITH ( ) ARE REFERENCE DIMENSIONS. ACTUAL DIMENSIONS MAY VARY.
3. FOR FABRICATION DRAWINGS WITH DETAILED STRUCTURE DIMENSIONS AND WEIGHTS, PLEASE CONTACT YOUR CONTECH ENGINEERED SOLUTIONS LLC REPRESENTATIVE. www.ContechES.com
4. CDS WATER QUALITY STRUCTURE SHALL BE IN ACCORDANCE WITH ALL DESIGN DATA AND INFORMATION CONTAINED IN THIS DRAWING.
5. STRUCTURE SHALL MEET AASHTO HS20 AND CASTINGS SHALL MEET HS20 (AASHTO M 306) LOAD RATING, ASSUMING GROUNDWATER ELEVATION AT, OR BELOW, THE OUTLET PIPE INVERT ELEVATION. ENGINEER OF RECORD TO CONFIRM ACTUAL GROUNDWATER ELEVATION.
6. PVC HYDRAULIC SHEAR PLATE IS PLACED ON SHELF AT BOTTOM OF SCREEN CYLINDER. REMOVE AND REPLACE AS NECESSARY DURING MAINTENANCE CLEANING.

INSTALLATION NOTES

A. ANY SUB-BASE, BACKFILL DEPTH, AND/OR ANTI-FLOTATION PROVISIONS ARE SITE-SPECIFIC DESIGN CONSIDERATIONS AND SHALL BE SPECIFIED BY ENGINEER OF RECORD.
B. CONTRACTOR TO PROVIDE EQUIPMENT WITH SUFFICIENT LIFTING AND REACH CAPACITY TO LIFT AND SET THE CDS MANHOLE STRUCTURE (LIFTING CLUTCHES PROVIDED).
C. CONTRACTOR TO ADD JOINT SEALANT BETWEEN ALL STRUCTURE SECTIONS, AND ASSEMBLE STRUCTURE.
D. CONTRACTOR TO PROVIDE, INSTALL, AND GROUT PIPES. MATCH PIPE INVERTS WITH ELEVATIONS SHOWN.
E. CONTRACTOR TO TAKE APPROPRIATE MEASURES TO ASSURE UNIT IS WATER TIGHT, HOLDING WATER TO FLOWLINE INVERT MINIMUM. IT IS SUGGESTED THAT ALL JOINTS BELOW PIPE INVERTS ARE GROUTED.

CONTECH ENGINEERED SOLUTIONS LLC
www.ContechES.com
9025 Centre Pointe Dr., Suite 400, West Chester, OH 45069
800-338-1122 513-645-7000 513-645-7993 FAX

CDS2015-4-C
INLINE CDS
STANDARD DETAIL

WQS G-1-1 – CONTECH CDS2015-4-C – WATER QUALITY STRUCTURE — 21

CASCADE SEPARATOR DESIGN NOTES

THE STANDARD CS-5 CONFIGURATION IS SHOWN. ALTERNATE CONFIGURATIONS ARE AVAILABLE AND ARE LISTED BELOW. SOME CONFIGURATIONS MAY BE COMBINED TO SUIT SITE REQUIREMENTS.

CONFIGURATION DESCRIPTION
GRATED INLET ONLY (NO INLET PIPE)
GRATED INLET WITH INLET PIPE OR PIPES
CURB INLET ONLY (NO INLET PIPE)
CURB INLET WITH INLET PIPE OR PIPES

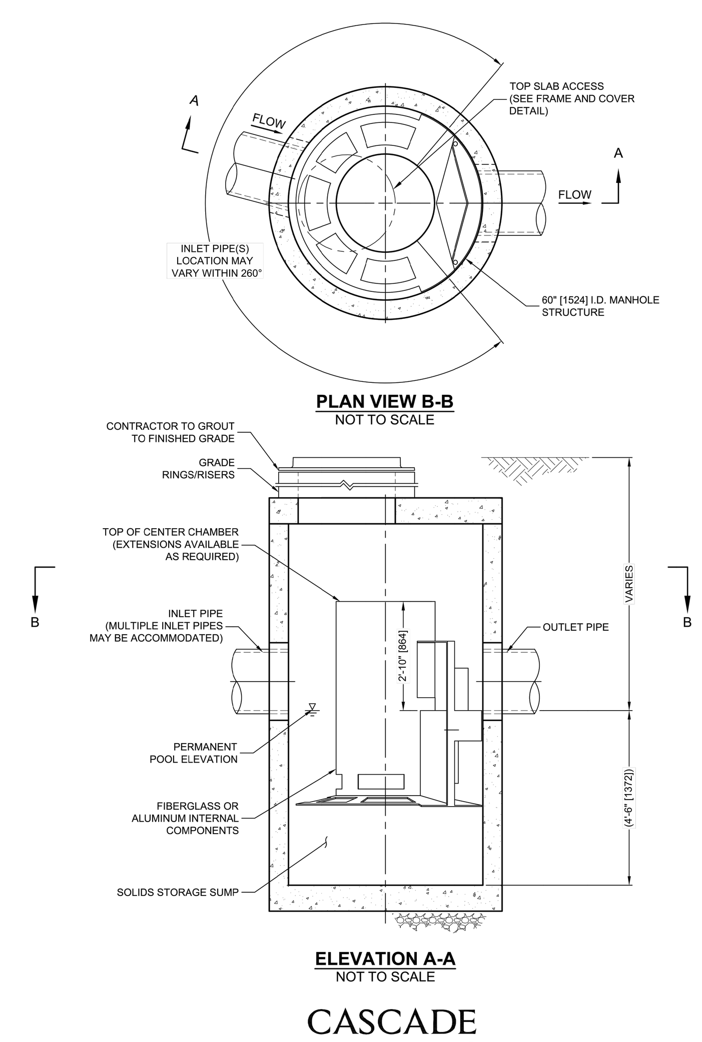

CASCADE separator™

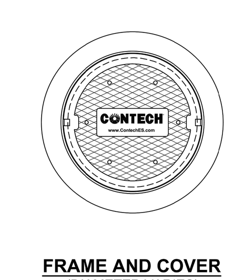

FRAME AND COVER
(DIAMETER VARIES)
NOT TO SCALE

SITE SPECIFIC DATA REQUIREMENTS

STRUCTURE ID			
WATER QUALITY FLOW RATE (cfs [L/s])			
PEAK FLOW RATE (cfs [L/s])			
RETURN PERIOD OF PEAK FLOW (yrs)			
RIM ELEVATION			
PIPE DATA:	INVERT	MATERIAL	DIAMETER
INLET PIPE 1	414.49	HDPE	15"
INLET PIPE 2	414.00	HDPE	24"
OUTLET PIPE	414.00	HDPE	24"
NOTES / SPECIAL REQUIREMENTS:			

GENERAL NOTES

1. CONTECH TO PROVIDE ALL MATERIALS UNLESS NOTED OTHERWISE.
2. FOR SITE SPECIFIC DRAWINGS WITH DETAILED STRUCTURE DIMENSIONS AND WEIGHT, PLEASE CONTACT YOUR CONTECH ENGINEERED SOLUTIONS LLC REPRESENTATIVE. www.ContechES.com
3. CASCADE SEPARATOR WATER QUALITY STRUCTURE SHALL BE IN ACCORDANCE WITH ALL DESIGN DATA AND INFORMATION CONTAINED IN THIS DRAWING. CONTRACTOR TO CONFIRM STRUCTURE MEETS REQUIREMENTS OF PROJECT.
4. CASCADE SEPARATOR STRUCTURE SHALL MEET AASHTO HS20 LOAD RATING, ASSUMING EARTH COVER OF 0' - 2' [610], AND GROUNDWATER ELEVATION AT, OR BELOW, THE OUTLET PIPE INVERT ELEVATION. ENGINEER OF RECORD TO CONFIRM ACTUAL GROUNDWATER ELEVATION. CASTINGS SHALL MEET AASHTO M306 AND BE CAST WITH THE CONTECH LOGO.
5. CASCADE SEPARATOR STRUCTURE SHALL BE PRECAST CONCRETE CONFORMING TO ASTM C478 AND AASHTO LOAD FACTOR DESIGN METHOD.
6. ALTERNATE UNITS ARE SHOWN IN MILLIMETERS [mm].

INSTALLATION NOTES

A. ANY SUB-BASE, BACKFILL DEPTH, AND/OR ANTI-FLOTATION PROVISIONS ARE SITE-SPECIFIC DESIGN CONSIDERATIONS AND SHALL BE SPECIFIED BY ENGINEER OF RECORD.
B. CONTRACTOR TO PROVIDE EQUIPMENT WITH SUFFICIENT LIFTING AND REACH CAPACITY TO LIFT AND SET THE CASCADE SEPARATOR MANHOLE STRUCTURE.
C. CONTRACTOR TO INSTALL JOINT SEALANT BETWEEN ALL STRUCTURE SECTIONS AND ASSEMBLE STRUCTURE.
D. CONTRACTOR TO PROVIDE, INSTALL, AND GROUT INLET AND OUTLET PIPE(S). MATCH PIPE INVERTS WITH ELEVATIONS SHOWN. ALL PIPE CENTERLINES TO MATCH PIPE OPENING CENTERLINES.
E. CONTRACTOR TO TAKE APPROPRIATE MEASURES TO ASSURE UNIT IS WATER TIGHT, HOLDING WATER TO FLOWLINE INVERT MINIMUM. IT IS SUGGESTED THAT ALL JOINTS BELOW PIPE INVERTS ARE GROUTED.

CONTECH ENGINEERED SOLUTIONS LLC
www.contechES.com
9025 Centre Pointe Dr., Suite 400, West Chester, OH 45069
800-338-1122 513-645-7000 513-645-7993 FAX

CS-5
CASCADE SEPARATOR
STANDARD DETAIL

WQS F-2 – CONTECH CS-5 – WATER QUALITY STRUCTURE — 22

X

No.	Revision	Date	By

Previous Editions Obsolete

APPLICANT:
FARRELL BUILDING COMPANY
2317 MONTAUK HIGHWAY
BRIDGEHAMPTON, NY 11932

JMC Planning, Engineering, Landscape Architecture & Land Surveying, PLLC
JMC Site Development Consultants, LLC
John Meyer Consulting, Inc.
120 BEDFORD ROAD • ARMONK, NY 10504
voice 914.273.5225 • fax 914.273.2102
www.jmcpllc.com

CONSTRUCTION DETAILS

FARRELL INDUSTRIAL PARK
ROUTE 300
TOWN OF NEWBURGH, NY

ANY ALTERATION OF PLANS, SPECIFICATIONS, PLATS AND REPORTS BEARING THE SEAL OF A LICENSED PROFESSIONAL ENGINEER OR LICENSED LAND SURVEYOR IS A VIOLATION OF SECTION 7209 OF THE NEW YORK STATE EDUCATION LAW, EXCEPT AS PROVIDED FOR BY SECTION 7209, SUBSECTION 2.

Drawn: TC	Approved: DL/JS
Scale:	NOT TO SCALE
Date:	12/03/2020
Project No:	18156
18156-DETAILS	C-901
Drawing No:	C-901

COPYRIGHT © 2020 by JMC. All Rights Reserved. No part of this document may be reproduced, stored in a retrieval system, or transmitted in any form or by means, electronic, mechanical, photocopying, recording or otherwise, without the prior written permission of JMC PLANNING, ENGINEERING, LANDSCAPE ARCHITECTURE & LAND SURVEYING, PLLC | JMC SITE DEVELOPMENT CONSULTANTS, LLC | JOHN MEYER CONSULTING, INC. (JMC). Any modifications or alterations to this document without the written permission of JMC shall render them invalid and unusable.

NOT FOR CONSTRUCTION

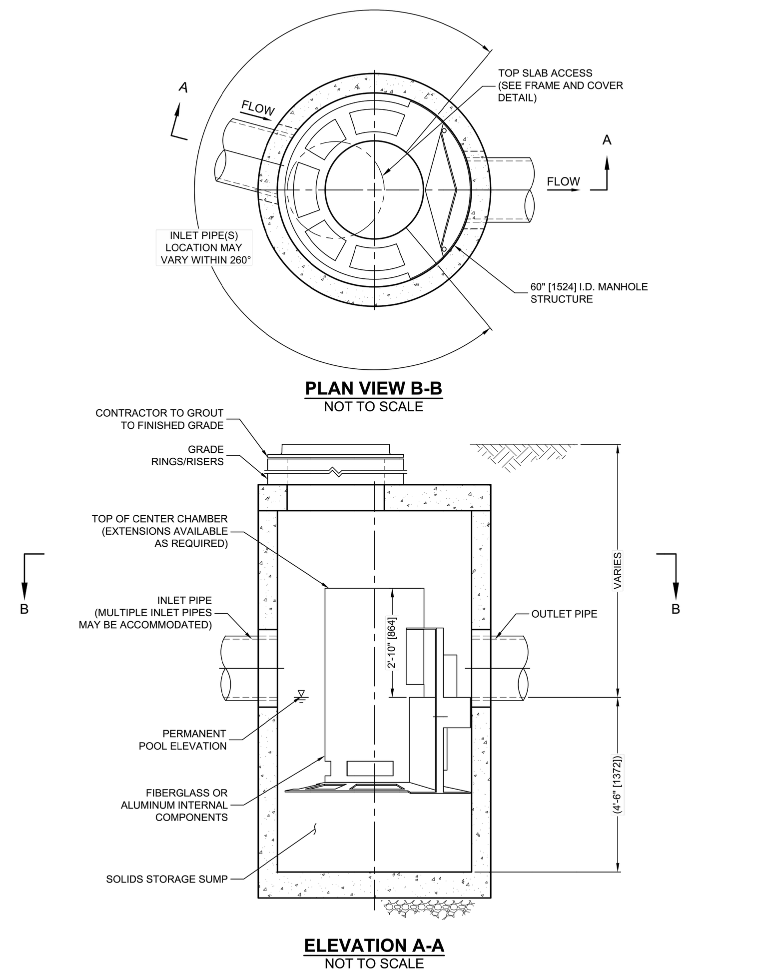

CASCADE separator™

CASCADE SEPARATOR DESIGN NOTES

THE STANDARD CS-5 CONFIGURATION IS SHOWN. ALTERNATE CONFIGURATIONS ARE AVAILABLE AND ARE LISTED BELOW. SOME CONFIGURATIONS MAY BE COMBINED TO SUIT SITE REQUIREMENTS.

CONFIGURATION DESCRIPTION
GRATED INLET ONLY (NO INLET PIPE)
GRATED INLET WITH INLET PIPE OR PIPES
CURB INLET ONLY (NO INLET PIPE)
CURB INLET WITH INLET PIPE OR PIPES

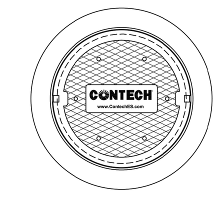

FRAME AND COVER
(DIAMETER VARIES)
NOT TO SCALE

SITE SPECIFIC DATA REQUIREMENTS			
STRUCTURE ID			
WATER QUALITY FLOW RATE (cfs [L/s])			
PEAK FLOW RATE (cfs [L/s])			
RETURN PERIOD OF PEAK FLOW (yrs)			
RIM ELEVATION			
PIPE DATA:	INVERT	MATERIAL	DIAMETER
INLET PIPE 1	423.25	HDPE	15"
INLET PIPE 2			
OUTLET PIPE	423.25	HDPE	15"
NOTES / SPECIAL REQUIREMENTS:			

GENERAL NOTES
1. CONTECH TO PROVIDE ALL MATERIALS UNLESS NOTED OTHERWISE.
2. FOR SITE SPECIFIC DRAWINGS WITH DETAILED STRUCTURE DIMENSIONS AND WEIGHT, PLEASE CONTACT YOUR CONTECH ENGINEERED SOLUTIONS LLC REPRESENTATIVE. www.ContechES.com
3. CASCADE SEPARATOR WATER QUALITY STRUCTURE SHALL BE IN ACCORDANCE WITH ALL DESIGN DATA AND INFORMATION CONTAINED IN THIS DRAWING. CONTRACTOR TO CONFIRM STRUCTURE MEETS REQUIREMENTS OF PROJECT.
4. CASCADE SEPARATOR STRUCTURE SHALL MEET AASHTO HS20 LOAD RATING, ASSUMING EARTH COVER OF 0' - 2' [610], AND GROUNDWATER ELEVATION AT, OR BELOW, THE OUTLET PIPE INVERT ELEVATION. ENGINEER OF RECORD TO CONFIRM ACTUAL GROUNDWATER ELEVATION. CASTINGS SHALL MEET AASHTO M306 AND BE CAST WITH THE CONTECH LOGO.
5. CASCADE SEPARATOR STRUCTURE SHALL BE PRECAST CONCRETE CONFORMING TO ASTM C478 AND AASHTO LOAD FACTOR DESIGN METHOD.
6. ALTERNATE UNITS ARE SHOWN IN MILLIMETERS [mm].

INSTALLATION NOTES
A. ANY SUB-BASE, BACKFILL DEPTH, AND/OR ANTI-FLOTATION PROVISIONS ARE SITE-SPECIFIC DESIGN CONSIDERATIONS AND SHALL BE SPECIFIED BY ENGINEER OF RECORD.
B. CONTRACTOR TO PROVIDE EQUIPMENT WITH SUFFICIENT LIFTING AND REACH CAPACITY TO LIFT AND SET THE CASCADE SEPARATOR MANHOLE STRUCTURE.
C. CONTRACTOR TO INSTALL JOINT SEALANT BETWEEN ALL STRUCTURE SECTIONS AND ASSEMBLE STRUCTURE.
D. CONTRACTOR TO PROVIDE, INSTALL, AND GROUT INLET AND OUTLET PIPE(S). MATCH PIPE INVERTS WITH ELEVATIONS SHOWN. ALL PIPE CENTERLINES TO MATCH PIPE OPENING CENTERLINES.
E. CONTRACTOR TO TAKE APPROPRIATE MEASURES TO ASSURE UNIT IS WATER TIGHT, HOLDING WATER TO FLOWLINE INVERT MINIMUM. IT IS SUGGESTED THAT ALL JOINTS BELOW PIPE INVERTS ARE GROUTED.

CONTECH ENGINEERED SOLUTIONS LLC
www.contechES.com
9025 Centre Pointe Dr., Suite 400, West Chester, OH 45069
800-338-1122 513-645-7000 513-645-7993 FAX

CS-5
CASCADE SEPARATOR
STANDARD DETAIL

5/11/2020 1:49 PM

WQS E-2 – CONTECH CS-5 – WATER QUALITY STRUCTURE | 23

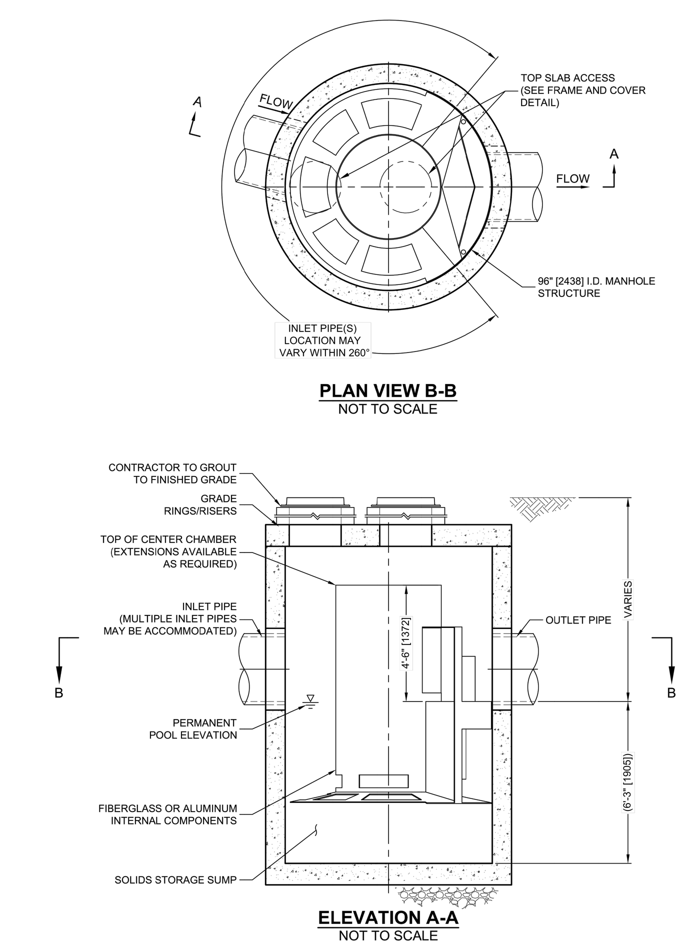

CASCADE separator™

CASCADE SEPARATOR DESIGN NOTES

THE STANDARD CS-8 CONFIGURATION IS SHOWN. ALTERNATE CONFIGURATIONS ARE AVAILABLE AND ARE LISTED BELOW. SOME CONFIGURATIONS MAY BE COMBINED TO SUIT SITE REQUIREMENTS.

CONFIGURATION DESCRIPTION
GRATED INLET ONLY (NO INLET PIPE)
GRATED INLET WITH INLET PIPE OR PIPES
CURB INLET ONLY (NO INLET PIPE)
CURB INLET WITH INLET PIPE OR PIPES

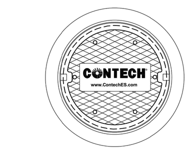

FRAME AND COVER
(DIAMETER VARIES)
NOT TO SCALE

SITE SPECIFIC DATA REQUIREMENTS			
STRUCTURE ID			
WATER QUALITY FLOW RATE (cfs [L/s])			
PEAK FLOW RATE (cfs [L/s])			
RETURN PERIOD OF PEAK FLOW (yrs)			
RIM ELEVATION			
PIPE DATA:	INVERT	MATERIAL	DIAMETER
INLET PIPE 1	439.40	HDPE	24"
INLET PIPE 2			
OUTLET PIPE	433.40	HDPE	24"
NOTES / SPECIAL REQUIREMENTS:			

GENERAL NOTES
1. CONTECH TO PROVIDE ALL MATERIALS UNLESS NOTED OTHERWISE.
2. FOR SITE SPECIFIC DRAWINGS WITH DETAILED STRUCTURE DIMENSIONS AND WEIGHT, PLEASE CONTACT YOUR CONTECH ENGINEERED SOLUTIONS LLC REPRESENTATIVE. www.ContechES.com
3. CASCADE SEPARATOR WATER QUALITY STRUCTURE SHALL BE IN ACCORDANCE WITH ALL DESIGN DATA AND INFORMATION CONTAINED IN THIS DRAWING. CONTRACTOR TO CONFIRM STRUCTURE MEETS REQUIREMENTS OF PROJECT.
4. CASCADE SEPARATOR STRUCTURE SHALL MEET AASHTO HS20 LOAD RATING, ASSUMING EARTH COVER OF 0' - 2' [610], AND GROUNDWATER ELEVATION AT, OR BELOW, THE OUTLET PIPE INVERT ELEVATION. ENGINEER OF RECORD TO CONFIRM ACTUAL GROUNDWATER ELEVATION. CASTINGS SHALL MEET AASHTO M306 AND BE CAST WITH THE CONTECH LOGO.
5. CASCADE SEPARATOR STRUCTURE SHALL BE PRECAST CONCRETE CONFORMING TO ASTM C478 AND AASHTO LOAD FACTOR DESIGN METHOD.
6. ALTERNATE UNITS ARE SHOWN IN MILLIMETERS [mm].

INSTALLATION NOTES
A. ANY SUB-BASE, BACKFILL DEPTH, AND/OR ANTI-FLOTATION PROVISIONS ARE SITE-SPECIFIC DESIGN CONSIDERATIONS AND SHALL BE SPECIFIED BY ENGINEER OF RECORD.
B. CONTRACTOR TO PROVIDE EQUIPMENT WITH SUFFICIENT LIFTING AND REACH CAPACITY TO LIFT AND SET THE CASCADE SEPARATOR MANHOLE STRUCTURE.
C. CONTRACTOR TO INSTALL JOINT SEALANT BETWEEN ALL STRUCTURE SECTIONS AND ASSEMBLE STRUCTURE.
D. CONTRACTOR TO PROVIDE, INSTALL, AND GROUT INLET AND OUTLET PIPE(S). MATCH PIPE INVERTS WITH ELEVATIONS SHOWN. ALL PIPE CENTERLINES TO MATCH PIPE OPENING CENTERLINES.
E. CONTRACTOR TO TAKE APPROPRIATE MEASURES TO ASSURE UNIT IS WATER TIGHT, HOLDING WATER TO FLOWLINE INVERT MINIMUM. IT IS SUGGESTED THAT ALL JOINTS BELOW PIPE INVERTS ARE GROUTED.

CONTECH ENGINEERED SOLUTIONS LLC
www.contechES.com
9025 Centre Pointe Dr., Suite 400, West Chester, OH 45069
800-338-1122 513-645-7000 513-645-7993 FAX

CS-8
CASCADE SEPARATOR
STANDARD DETAIL

5/11/2020 1:48 PM

WQS C-1 – CONTECH CDS4045-8-C – WATER QUALITY STRUCTURE | 24

X

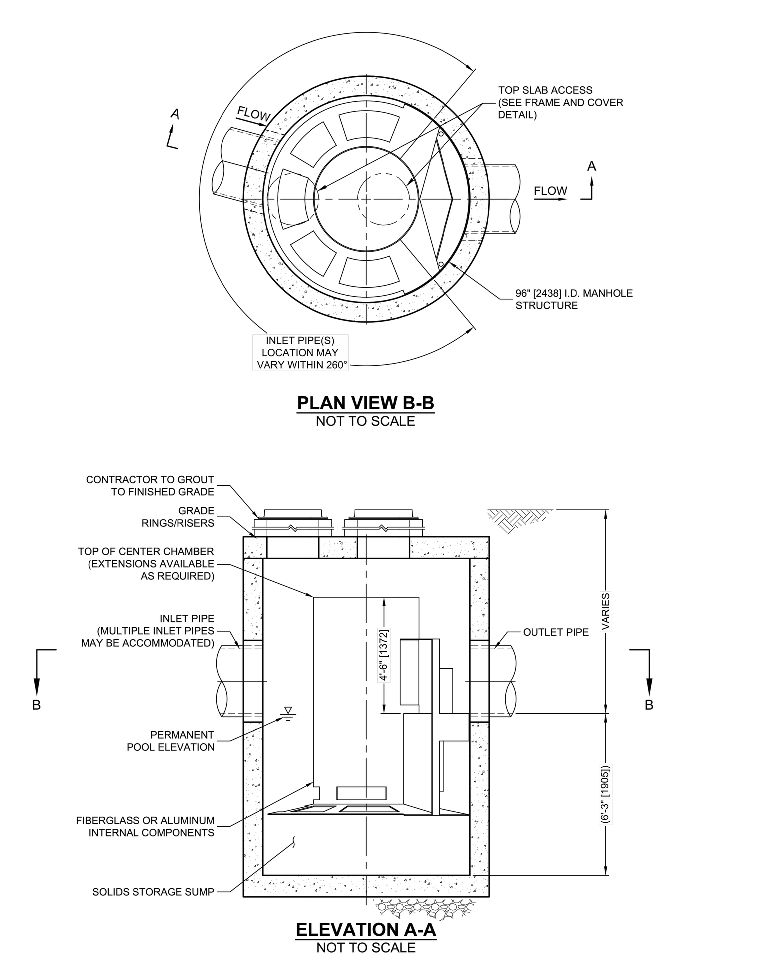

CASCADE separator™

CASCADE SEPARATOR DESIGN NOTES

THE STANDARD CS-8 CONFIGURATION IS SHOWN. ALTERNATE CONFIGURATIONS ARE AVAILABLE AND ARE LISTED BELOW. SOME CONFIGURATIONS MAY BE COMBINED TO SUIT SITE REQUIREMENTS.

CONFIGURATION DESCRIPTION
GRATED INLET ONLY (NO INLET PIPE)
GRATED INLET WITH INLET PIPE OR PIPES
CURB INLET ONLY (NO INLET PIPE)
CURB INLET WITH INLET PIPE OR PIPES

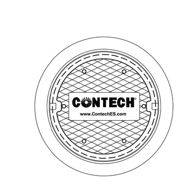

FRAME AND COVER
(DIAMETER VARIES)
NOT TO SCALE

SITE SPECIFIC DATA REQUIREMENTS			
STRUCTURE ID			
WATER QUALITY FLOW RATE (cfs [L/s])			
PEAK FLOW RATE (cfs [L/s])			
RETURN PERIOD OF PEAK FLOW (yrs)			
RIM ELEVATION			
PIPE DATA:	INVERT	MATERIAL	DIAMETER
INLET PIPE 1	433.66	HDPE	30"
INLET PIPE 2			
OUTLET PIPE	433.66	HDPE	30"
NOTES / SPECIAL REQUIREMENTS:			

GENERAL NOTES
1. CONTECH TO PROVIDE ALL MATERIALS UNLESS NOTED OTHERWISE.
2. FOR SITE SPECIFIC DRAWINGS WITH DETAILED STRUCTURE DIMENSIONS AND WEIGHT, PLEASE CONTACT YOUR CONTECH ENGINEERED SOLUTIONS LLC REPRESENTATIVE. www.ContechES.com
3. CASCADE SEPARATOR WATER QUALITY STRUCTURE SHALL BE IN ACCORDANCE WITH ALL DESIGN DATA AND INFORMATION CONTAINED IN THIS DRAWING. CONTRACTOR TO CONFIRM STRUCTURE MEETS REQUIREMENTS OF PROJECT.
4. CASCADE SEPARATOR STRUCTURE SHALL MEET AASHTO HS20 LOAD RATING, ASSUMING EARTH COVER OF 0' - 2' [610], AND GROUNDWATER ELEVATION AT, OR BELOW, THE OUTLET PIPE INVERT ELEVATION. ENGINEER OF RECORD TO CONFIRM ACTUAL GROUNDWATER ELEVATION. CASTINGS SHALL MEET AASHTO M306 AND BE CAST WITH THE CONTECH LOGO.
5. CASCADE SEPARATOR STRUCTURE SHALL BE PRECAST CONCRETE CONFORMING TO ASTM C478 AND AASHTO LOAD FACTOR DESIGN METHOD.
6. ALTERNATE UNITS ARE SHOWN IN MILLIMETERS [mm].

INSTALLATION NOTES
A. ANY SUB-BASE, BACKFILL DEPTH, AND/OR ANTI-FLOTATION PROVISIONS ARE SITE-SPECIFIC DESIGN CONSIDERATIONS AND SHALL BE SPECIFIED BY ENGINEER OF RECORD.
B. CONTRACTOR TO PROVIDE EQUIPMENT WITH SUFFICIENT LIFTING AND REACH CAPACITY TO LIFT AND SET THE CASCADE SEPARATOR MANHOLE STRUCTURE.
C. CONTRACTOR TO INSTALL JOINT SEALANT BETWEEN ALL STRUCTURE SECTIONS AND ASSEMBLE STRUCTURE.
D. CONTRACTOR TO PROVIDE, INSTALL, AND GROUT INLET AND OUTLET PIPE(S). MATCH PIPE INVERTS WITH ELEVATIONS SHOWN. ALL PIPE CENTERLINES TO MATCH PIPE OPENING CENTERLINES.
E. CONTRACTOR TO TAKE APPROPRIATE MEASURES TO ASSURE UNIT IS WATER TIGHT, HOLDING WATER TO FLOWLINE INVERT MINIMUM. IT IS SUGGESTED THAT ALL JOINTS BELOW PIPE INVERTS ARE GROUTED.

CONTECH ENGINEERED SOLUTIONS LLC
www.contechES.com
9025 Centre Pointe Dr., Suite 400, West Chester, OH 45069
800-338-1122 513-645-7000 513-645-7993 FAX

CS-8
CASCADE SEPARATOR
STANDARD DETAIL

5/11/2020 1:48 PM

WQS B-3 – CONTECH CDS5653-10-C – WATER QUALITY STRUCTURE | 25

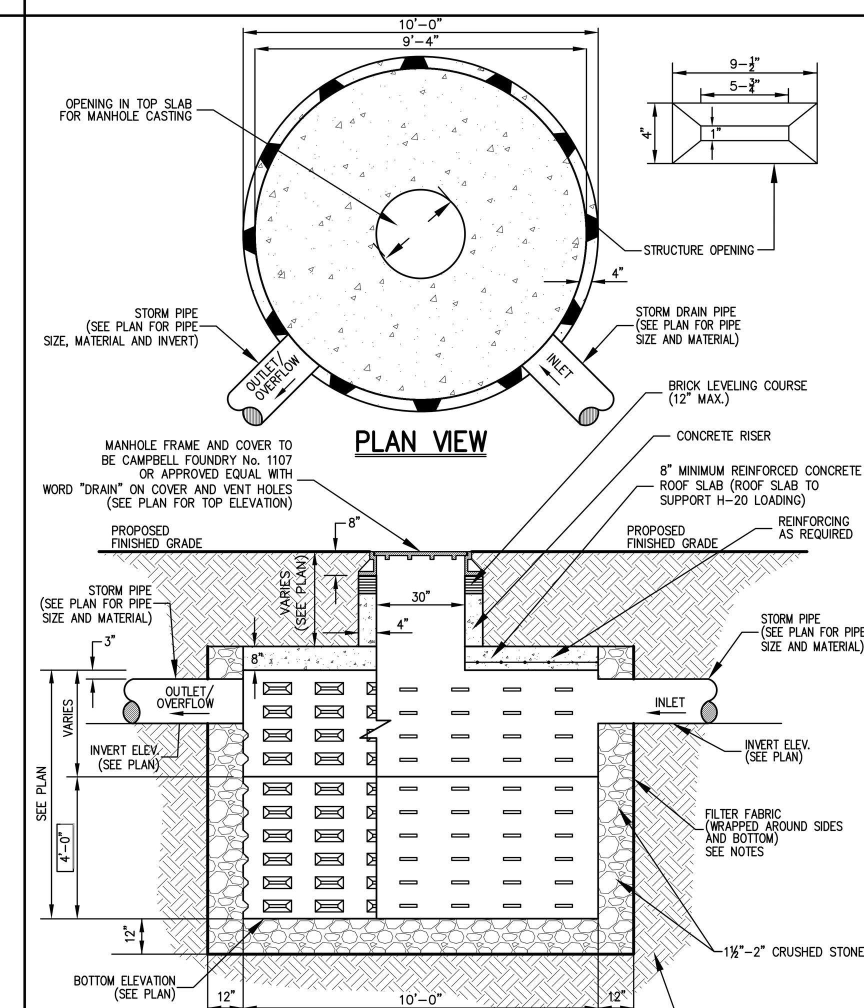

NOTES:
1. CONCRETE TO TEST 4000 PSI AT 28 DAYS. WELDED WIRE MESH TO COMPLY WITH ASTM A185.
2. NOTES A-4, A-5, A-6 & A-7 UNDER "UTILITY NOTES" SHALL APPLY TO ALL DRAINAGE STRUCTURES.
3. MANUFACTURER SHALL PROVIDE NECESSARY OPENINGS IN PROPER LOCATIONS AND PROPER SIZES FOR INLET & OUTLET PIPES.
4. CONTRACTOR SHALL SUBMIT SHOP DRAWINGS OF THE STRUCTURE FOR THE ENGINEER'S REVIEW.
5. FILTER FABRIC SHALL BE MIRAFI 160N OR FW402 FOR ADDED STRENGTH + HIGH FLOW RATE OF AN APPROVED EQUAL.

10 FOOT DIAMETER DRY WELL | 26

W = WIDTH (feet)
La = LENGTH (feet)
Do = DIAMETER (feet)
d50 = MEDIAN STONE DIAMETER (feet)
TW = TAILWATER (feet)
Q = DISCHARGE (cfs)
T = THICKNESS OF APRON (feet)

STRUCTURE	Q	Do	TW	W	La	d50	T
ES B-1	7.22	2	2	11	9	0.33	0.75

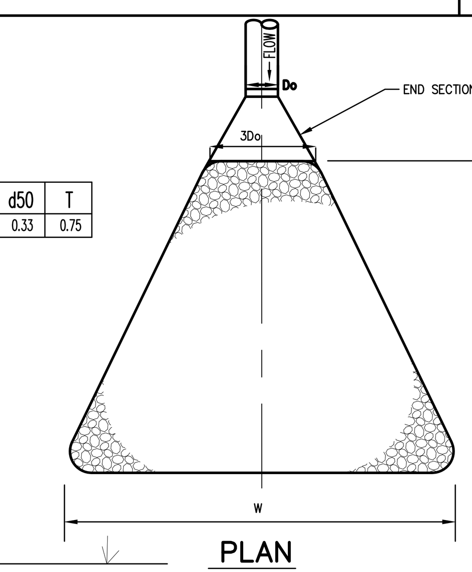

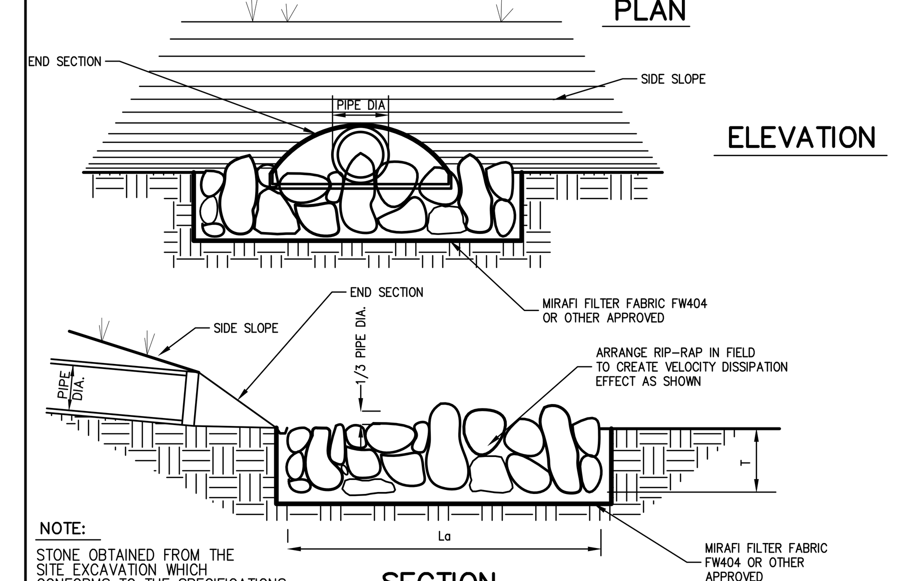

NOTE:
STONE OBTAINED FROM THE SITE EXCAVATION WHICH CONFORMS TO THE SPECIFICATIONS MAY BE USED AS RIP-RAP.

RIP-RAP APRON/ENERGY DISSIPATOR | 27
END SECTION

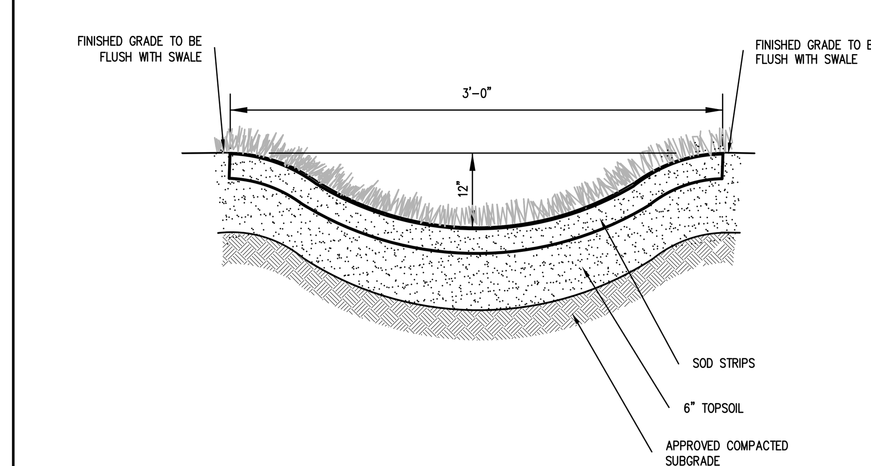

NOTES
1. IMMEDIATELY AFTER GRADING OPERATIONS, THE GRASS SWALE SHALL BE STABILIZED WITH SOD CONTAINING A MIXTURE OF 50% KENTUCKY BLUEGRASS, 25% CREEPING RED FESCUE AND 25% PERENNIAL RYEGRASS. SOD SHALL BE CUT IN UNIFORM WIDTH STRIPS OF LIVE GRASS.
2. FOR SWALE SLOPES EXCEEDING 8%, JUTE MESH SHALL BE UTILIZED TO STABILIZE THE SWALE BASE.
3. AREA ADJACENT TO SWALE TO BE BROUGHT TO FINISHED GRADE IMMEDIATELY AS REQUIRED, TOPSOILED, SEEDED AND MAINTAINED FOR EROSION CONTROL.

GRASS SWALE | 28

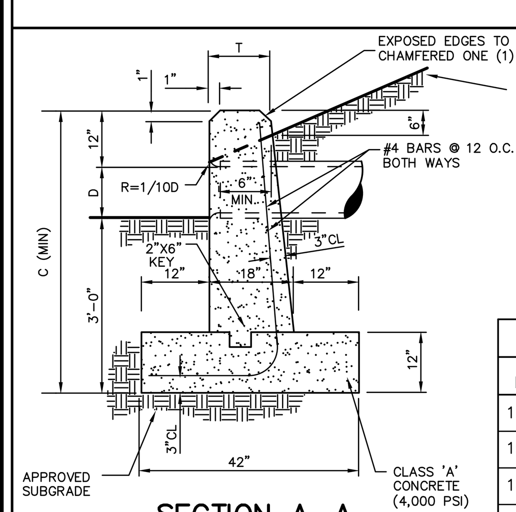

	C		1.5:1 SLOPE	2:1 SLOPE	3:1 SLOPE
D	MIN.	T	B	B	B
12"	5'-0"	8"	5'-0"	6'-0"	7'-0"
15"	5'-3"	8"	5'-6"	7'-0"	8'-9"
18"	5'-6"	8"	6'-0"	8'-0"	10'-6"
21"	5'-9"	10"	7'-0"	9'-0"	12'-3"
24"	6'-0"	10"	8'-0"	10'-0"	14'-0"
27"	6'-3"	12"	8'-6"	11'-0"	15'-9"
30"	6'-6"	12"	9'-0"	12'-0"	17'-6"
36"	7'-0"	12"	10'-6"	13'-6"	19'-6"
42"	7'-6"	12"	12'-0"	15'-0"	22'-6"
48"	8'-0"	12"	13'-6"	16'-6"	25'-6"
54"	8'-6"	12"	15'-0"	18'-0"	28'-6"

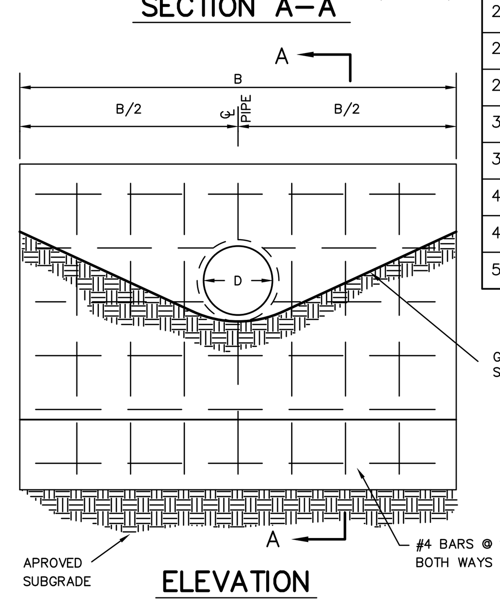

NOTE A
GROUND SLOPE TO BE 3 HORIZONTAL TO 1 VERTICAL UNLESS OTHERWISE SPECIFIED (SEE CHART)

STRAIGHT CONCRETE HEADWALL | 29

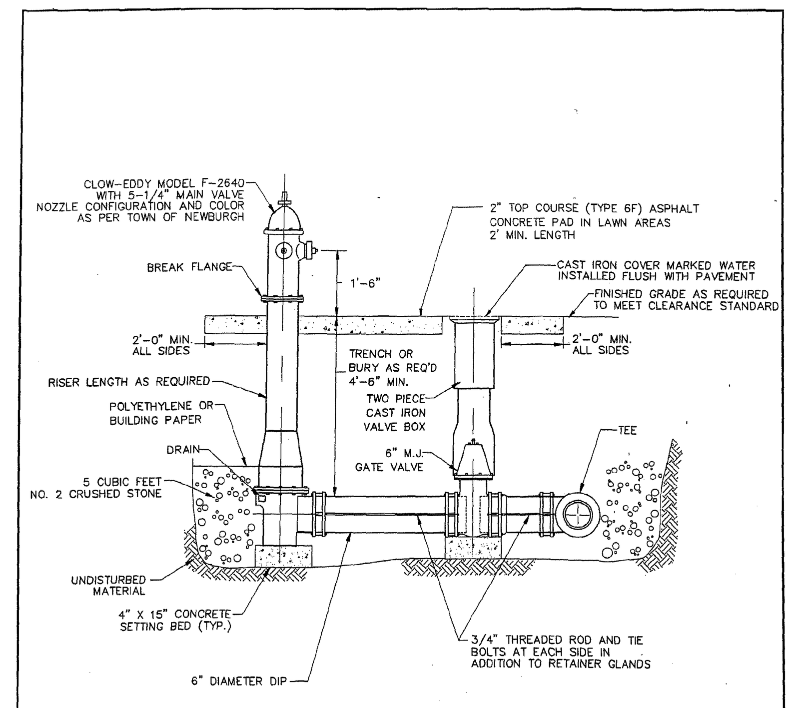

NOTES:
1. PROPOSED LOCATIONS OF HYDRANTS TO BE FIELD LOCATED (STAKED) AND APPROVED BY WATER SUPERINTENDENT PRIOR TO INSTALLATION.
2. HYDRANT TO BE INSTALLED WITHIN RIGHT-OF-WAY.
3. HYDRANT WITH PROPER RISER LENGTH (DEPTH OF BURY) SHALL BE INSTALLED AS REQUIRED TO MEET THE 2" MIN. TO 4" MAX. CLEARANCE BETWEEN THE CENTER OF THE BREAK FLANGES AND THE ASPHALT CONCRETE PAD.

TOWN OF NEWBURGH, NEW YORK
CONSOLIDATED WATER DISTRICT
STANDARD WATER DISTRIBUTION DETAILS

HYDRANT AND VALVE
ASSEMBLY INSTALLATION

DATE: NOVEMBER 2001 | BY: CLD | NO SCALE

NEWBURGH HYDRANT AND VALVE ASSEMBLY INSTALLATION | 30

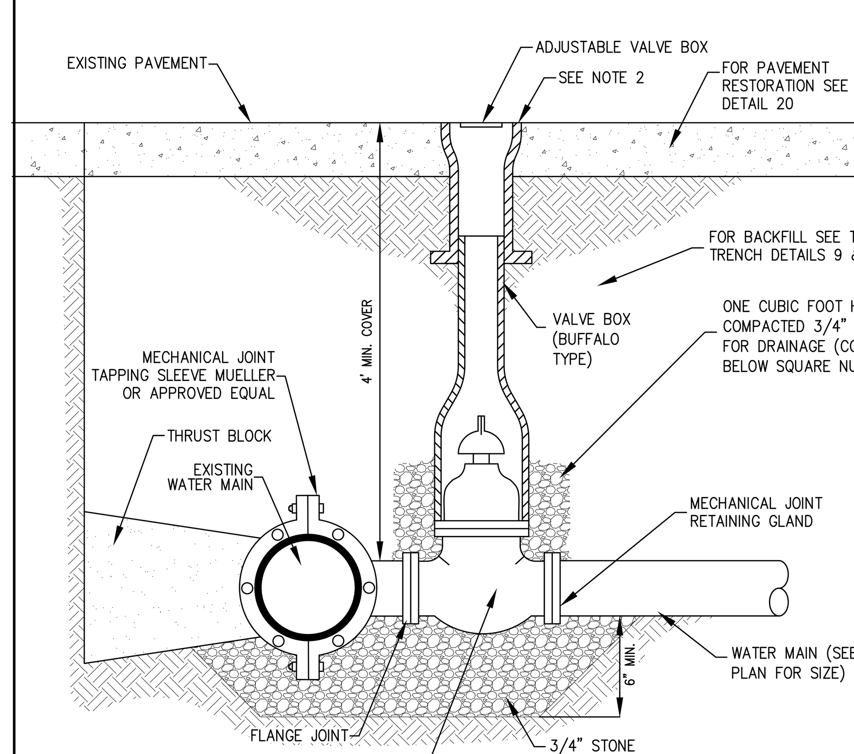

NOTES:
1. MAXIMUM BRANCH TAP IS MAIN DIAMETER – 2".
2. PROVIDE TWO LAYERS OF 15# ASPHALT FELT ROOFING PAPER BETWEEN VALVE BOX AND CONCRETE COLLAR TO PREVENT CONCRETE FROM ADHERING TO RISER.

WET TAP MAIN CONNECTION | 31

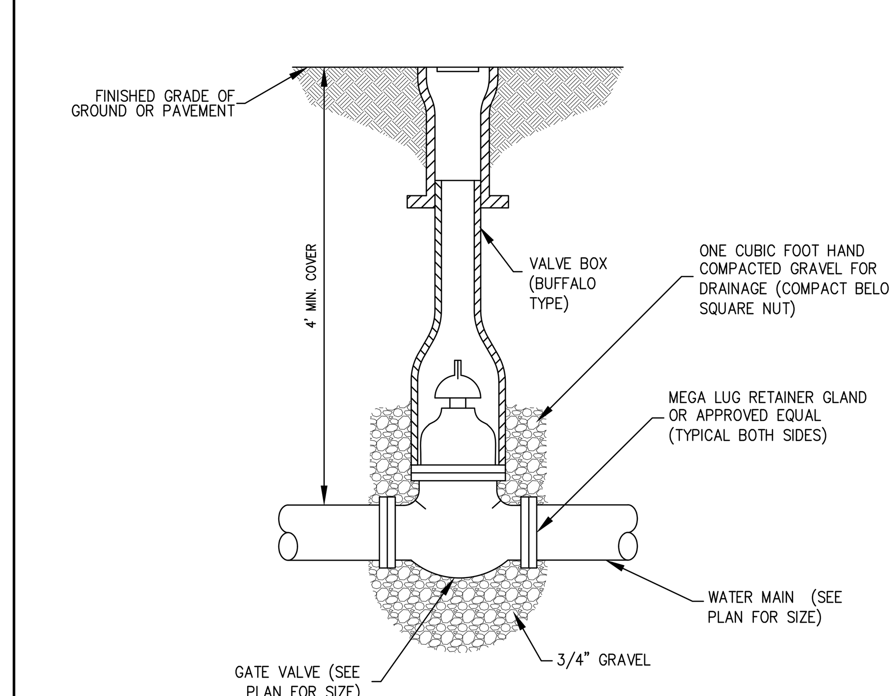

NOTES:
1. GATE VALVES SHALL CONFORM TO AWWA SPECIFICATION C-509-01. GATE VALVES SHALL BE SERIES 2360 AS MANUFACTURED BY MUELLER CO.
2. ALL VALVES SHALL OPEN TO THE LEFT (COUNTERCLOCKWISE).

GATE VALVE | 32

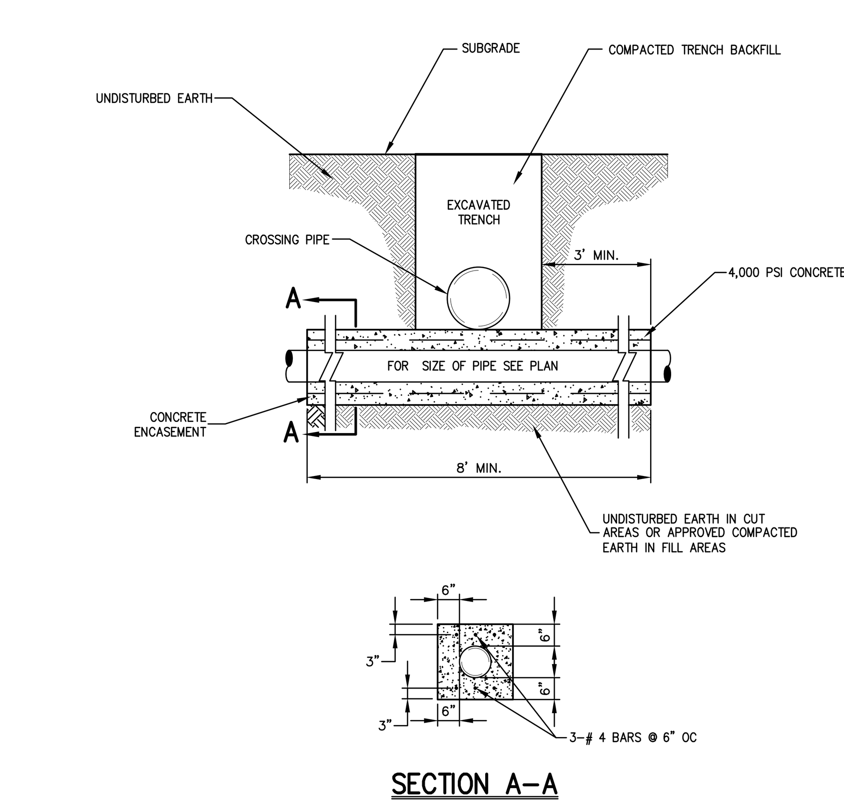

NOTE:
1. FULL LENGTH OF PIPE TO BE USED AT CROSSING. PIPE TO BE CENTERED ON CENTERLINE OF CROSSING PIPE. NO JOINTS SHALL BE LOCATED. WITHIN THE AREA OF CONCRETE ENCASEMENT.

CONCRETE ENCASEMENT | 33

No.	Revision	Date	By

Previous Editions Obsolete

APPLICANT:
FARRELL BUILDING COMPANY
2317 MONTAUK HIGHWAY
BRIDGEHAMPTON, NY 11932

JMC Planning, Engineering, Landscape Architecture & Land Surveying, PLLC
JMC Site Development Consultants, LLC
John Meyer Consulting, Inc.
120 BEDFORD ROAD • ARMONK, NY 10504
voice 914.273.5225 • fax 914.273.2102
www.jmcpllc.com

CONSTRUCTION DETAILS
FARRELL INDUSTRIAL PARK
ROUTE 300
TOWN OF NEWBURGH, NY

ANY ALTERATION OF PLANS, SPECIFICATIONS, PLATS AND REPORTS BEARING THE SEAL OF A LICENSED PROFESSIONAL ENGINEER OR LICENSED LAND SURVEYOR IS A VIOLATION OF SECTION 7209 OF THE NEW YORK STATE EDUCATION LAW, EXCEPT AS PROVIDED FOR BY SECTION 7209, SUBSECTION 2.

Drawn:	TC
Approved:	DL/JS
Scale:	NOT TO SCALE
Date:	12/03/2020
Project No:	18156
18156-DETAILS	C-902
Drawing No:	C-902

COPYRIGHT © 2020 by JMC All Rights Reserved. No part of this document may be reproduced, stored in a retrieval system, or transmitted in any form or by means, electronic, mechanical, photocopying, recording or otherwise, without the prior written permission of JMC PLANNING, ENGINEERING, LANDSCAPE ARCHITECTURE & LAND SURVEYING, PLLC | JMC SITE DEVELOPMENT CONSULTANTS, LLC | JOHN MEYER CONSULTING, INC. (JMC). Any modifications or alterations to this document without the written permission of JMC shall render them invalid and unusable.

NOT FOR CONSTRUCTION

ANCHOR AND THRUST BLOCKS — 34

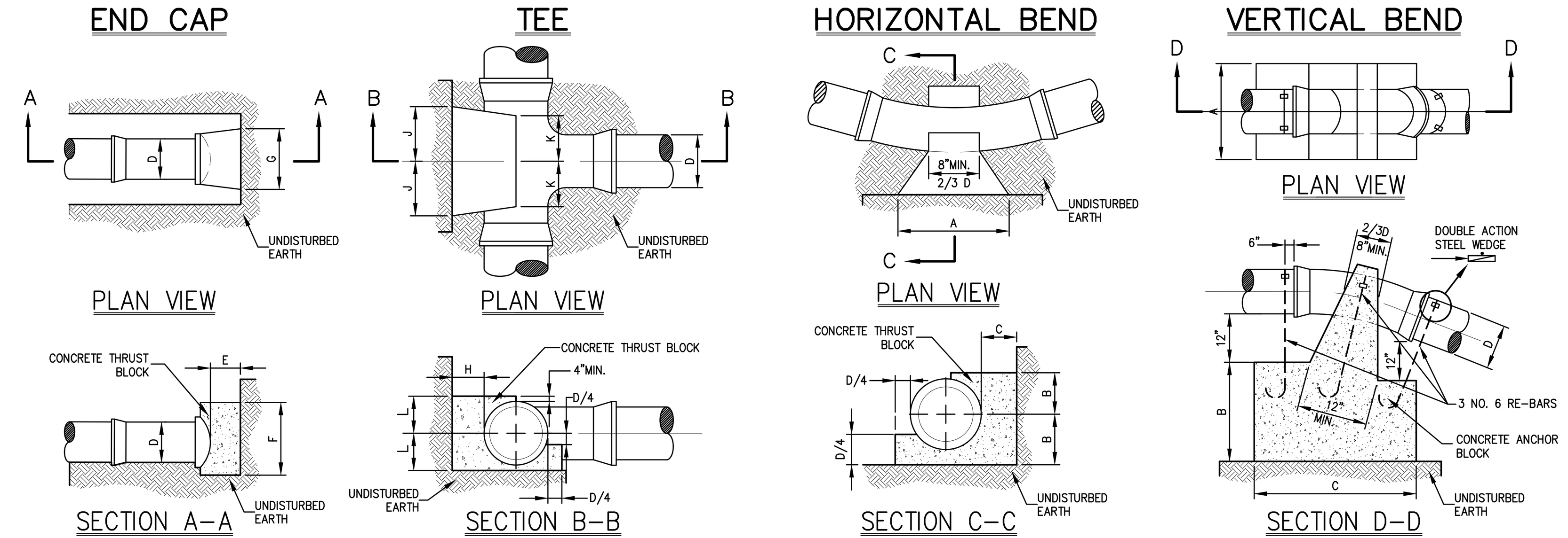

END CAP CHART

D	4"	6"	8"	10"	12"
E	6"	6"	8"	8"	10"
F	12"	12"	1'–4"	1'–8"	2'–0"
G	1'–5"	1'–5"	2'–0"	2'–5"	3'–0"

TEE CHART

D	4"	6"	8"	10"	12"
H	6"	7"	9"	10"	12"
L	8"	8"	10"	12"	1'–3"
J	7"	7"	9"	12"	1'–2"
K	6"	6"	8"	8"	8"

HORIZONTAL BEND CHART

BEND (DEGREES)		DIAMETER (D) 4"	6"	8"	10"	12"
1/32 (11¼°)	A	8"	8"	8"	10"	12"
	B	7"	7"	8"	9"	10"
	C	7"	7"	7"	8"	8"
1/16 (22½°)	A	9"	9"	12"	1'–6"	1'–9"
	B	7"	7"	8"	9"	10"
	C	8"	8"	9"	10"	11"
1/8 (45°)	A	1'–3"	1'–3"	1'–8"	2'–1"	2'–6"
	B	7"	7"	8"	9"	11"
	C	8"	8"	9"	10"	11"
1/4 (90°)	A	2'–0"	2'–0"	2'–6"	3'–0"	3'–6"
	B	7"	7"	9"	12"	1'–3"
	C	2'–0"	2'–0"	1'–9"	1'–8"	1'–7"

VERTICAL BEND CHART

BEND (DEGREES)		DIAMETER (D) 4"	6"	8"	10"	12"	16"
1/32 (11¼°)	A	1'–6"	1'–6"	2'–0"	2'–6"	3'–0"	3'–6"
	B	1'–3"	1'–3"	1'–9"	1'–3"	2'–0"	2'–0"
	C	2'–0"	2'–0"	2'–6"	2'–9"	3'–0"	4'–0"
1/16 (22½°)	A	2'–0"	2'–0"	3'–4"	3'–8"	4'–0"	4'–4"
	B	1'–9"	1'–9"	2'–3"	2'–6"	2'–6"	2'–6"
	C	2'–6"	2'–6"	2'–8"	4'–0"	4'–0"	5'–6"
1/8 (45°)	A	2'–6"	2'–6"	3'–0"	4'–0"	4'–6"	5'–2"
	B	2'–6"	2'–6"	2'–9"	3'–0"	3'–6"	4'–0"
	C	3'–0"	3'–0"	4'–0"	4'–6"	4'–9"	6'–6"

NOTES:

1. ALL CONCRETE TO BE CLASS A (4,000 PSI).
2. ALL DIMENSIONS ARE MINIMUMS; ALL ANCHOR AND THRUST BLOCKS SHALL BEAR ON UNDISTURBED EARTH.
3. IN ALL CASES SHOWN, MEASUREMENT "D" REFERS TO THE INSIDE PIPE DIAMETER.
4. ANCHOR AND THRUST BLOCK DIMENSIONS SHOWN ARE MINIMUM FOR 100 PSI WATER PRESSURE AND SOIL RESISTANCE OF 2 KIPS PER SQ FT. CONTRACTOR SHALL ADJUST FOR OTHER CONDITIONS AND SUBMIT FOR APPROVAL.
5. IF THE OWNER OF THE WATER SYSTEM REQUIRES A METHOD THAT RESTRAINS INDIVIDUAL JOINTS, EACH JOINT THAT FALLS WITHIN THE MINIMUM RESTRAINED LENGTH, MEASURED FROM THE CENTER OF THE FITTING, AS SHOWN ON THESE SHEETS SHALL BE RESTRAINED, AND SHALL WITHSTAND THE MAXIMUM PRESSURE APPLIED TO THE SYSTEM.
6. CLASS A CONCRETE SHALL NOT BE PLACED UNDER WATER. THE CONTRACTOR SHALL DEWATER THE EXCAVATION OR PLACE TYPE G CONCRETE USING APPROPRIATE UNDERWATER PLACEMENT TECHNIQUES.
7. CONCRETE FOR THRUST BLOCKS SHALL NOT BE ALLOWED TO COVER OR INTERFERE WITH JOINT OR RESTRAINT HARDWARE, PLASTIC SHEETING OR BUILDING FELT MAY BE PLACED OVER PIPE OR FITTINGS TO PREVENT CONCRETE FROM ADHERING TO SURFACES.
8. FOR BENDS, BEARING AREA SHALL BE PARALLEL TO THE EDGE OF THE FITTING AT THE FITTING MIDPOINT.
9. FOR TEES, BEARING AREA SHALL BE PERPENDICULAR TO THE BRANCH (SINGLE LEG) AXIS.
10. FOR REDUCERS, BEARING AREA SHALL BE PERPENDICULAR TO THE FITTING AXIS. THE MINIMUM THICKNESS ALONG THE FITTING AXIS SHALL BE 1'–0" OR THE LENGTH BETWEEN THE BELLS, WHICHEVER IS SMALLER.
11. THRUST RESTRAINTS FOR SIZES OR FITTINGS NOT SHOWN ON THESE SHEETS WILL BE DESIGNED ON A CASE BY CASE BASIS, AND WILL BE SHOWN IN THE CONTRACT DOCUMENTS.

ANTISEEP COLLAR — 35

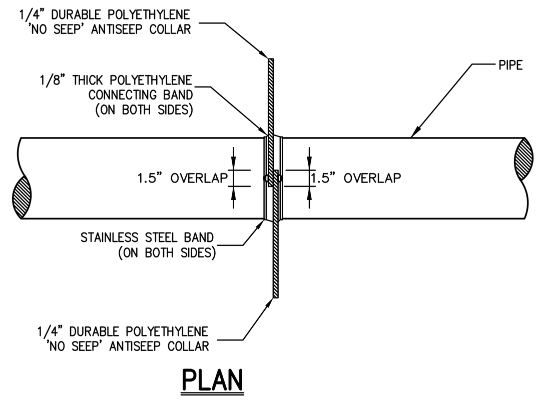

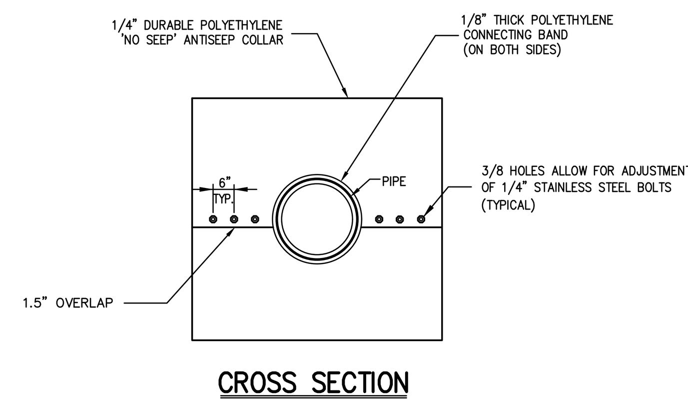

SEPARATION OF WATER AND SANITARY SEWER/STORM DRAIN LINES — 36

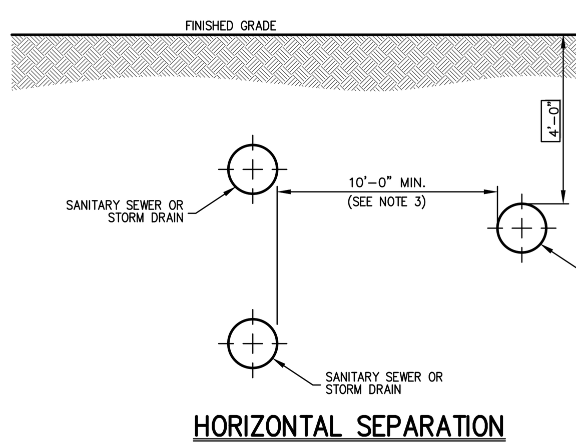

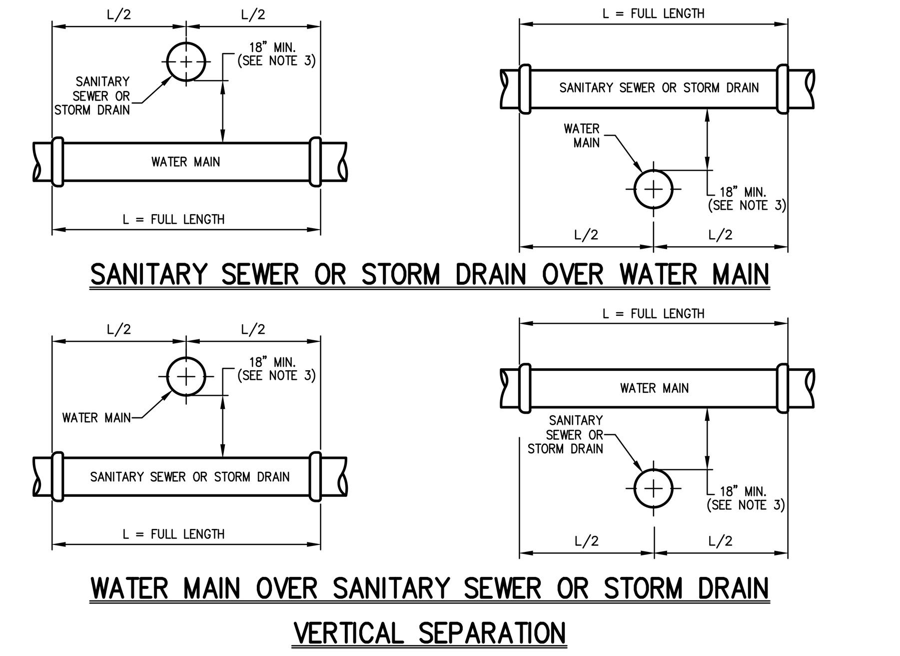

NOTES:

1. NORMAL CONDITIONS:
   A. WHENEVER A WATER MAIN MUST CROSS OVER OR UNDER A SANITARY SEWER OR STORM DRAIN, THE PIPES SHALL BE LAID TO PROVIDE A VERTICAL SEPARATION BETWEEN THEM OF AT LEAST 18 INCHES, AS MEASURED FROM THE BOTTOM OF THE HIGHER PIPE TO THE CROWN OF THE LOWER PIPE.
   B. FULL LENGTH OF WATER PIPE MUST BE CENTERED AT THE POINT OF CROSSING; NO JOINTS WILL BE PERMITTED AT THE POINT OF CROSSING.
2. WATER MAIN CROSSING UNDER SANITARY SEWERS:
   A. VERTICAL SEPARATION OF 18 INCHES MUST BE PROVIDED.
   B. ADEQUATE STRUCTURAL SUPPORT MUST BE PROVIDED FOR THE SANITARY SEWER TO PREVENT EXCESSIVE DEFLECTION OF JOINTS AND SETTLING.
   C. FULL LENGTH OF WATER PIPE MUST BE CENTERED AT THE POINT OF CROSSING; NO JOINTS WILL BE PERMITTED AT THE POINT OF CROSSING.
3. IF DURING CONSTRUCTION IT IS FOUND THAT THE REQUIRED SEPARATION OF WATER MAINS, SANITARY SEWERS, STORM SEWERS AND BUILDING SANITARY SEWERS CANNOT BE MET, THE CONTRACTOR OR HIS AUTHORIZED REPRESENTATIVE SHALL IN WRITING ADVISE JOHN MEYER CONSULTING OF THE SPECIFIC CONDITIONS ENCOUNTERED. APPROVAL OF ALTERNATIVE SEPARATION CRITERIA SHALL BE OBTAINED FROM THE [ ] PRIOR TO INSTALLATION.

SITE PAVEMENT (LIGHT DUTY) — 37

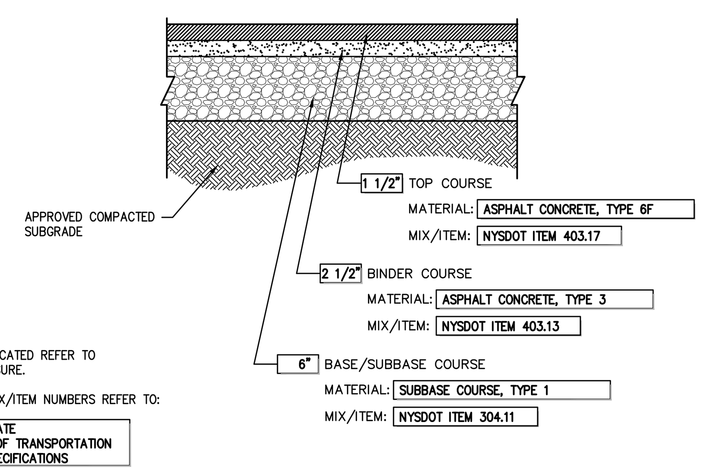

NOTES:

1. THICKNESSES INDICATED REFER TO COMPACTED MEASURE.
2. MATERIAL AND MIX/ITEM NUMBERS REFER TO:

NEW YORK STATE DEPARTMENT OF TRANSPORTATION STANDARD SPECIFICATIONS

CAST–IN–PLACE CONCRETE CURB — 39

NOTES:

1. INSTALL 1/2" PREMOLDED BITUMINOUS EXPANSION JOINT EVER 20 FEET.
2. UNLESS DIRECTED OTHERWISE, EXPANSION JOINTS SHALL ALSO BE INSTALLED AT THE PC AND PT OF ALL RADIUS CURB.
3. EACH EXPANSION JOINT SHALL BE LEFT EXPOSED AND NOT COVERED WITH A SKIM COAT OF CONCRETE.
4. INSTALL CONSTRUCTION JOINTS MID–WAY BETWEEN EXPANSION JOINTS SO THAT LENGTH OF CURB SEGMENTS WILL BE TEN (10) FEET.
5. LENGTH OF CURB SEGMENTS AT CLOSURES MAY BE VARIED BUT SHALL NOT BE LESS THAN FOUR (4) FEET.
6. WHEN INSTALLED ADJACENT TO SIDEWALK OR CONCRETE PAVEMENT, MATCH EXPANSION JOINTS.

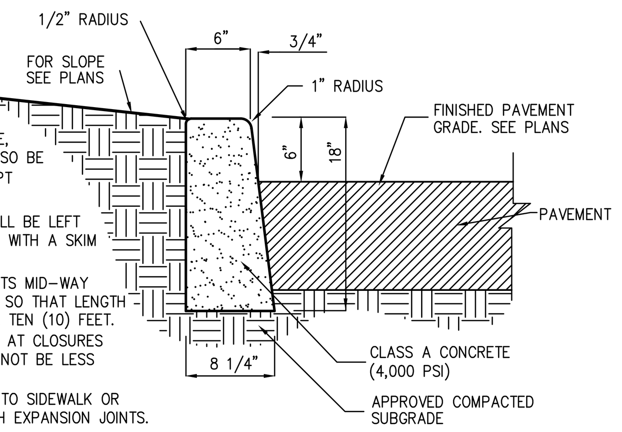

STONE CURB (GRANITE – SAWN TOP, SPLIT FACE) — 41

CURB TYPE	W (INCHES)	D (INCHES)
A	5	18
B	4	16

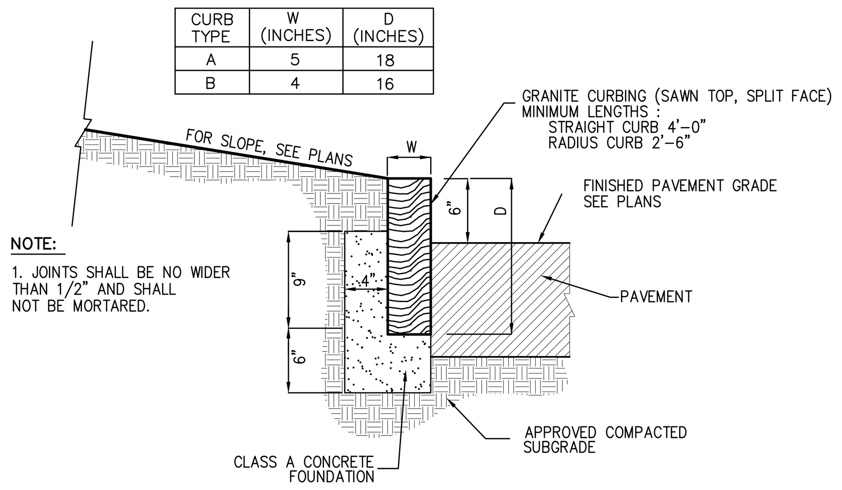

NOTE:

1. JOINTS SHALL BE NO WIDER THAN 1/2" AND SHALL NOT BE MORTARED.

MONOLITHIC CONCRETE CURB & SIDEWALK — 43

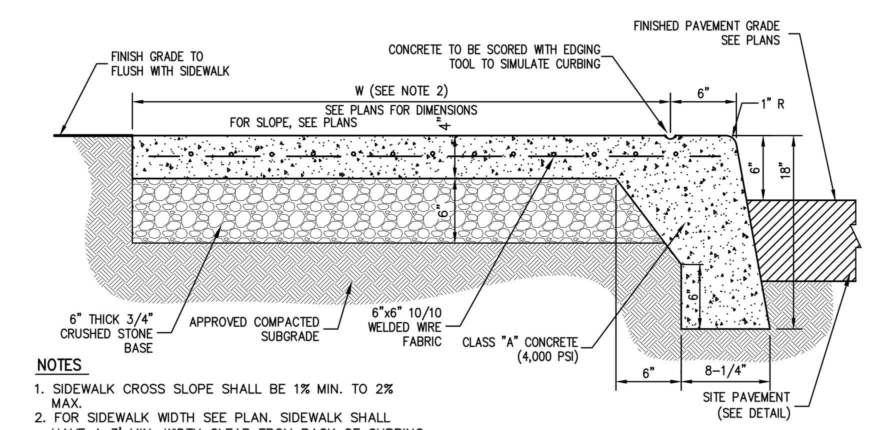

NOTES

1. SIDEWALK CROSS SLOPE SHALL BE 1% MIN. TO 2% MAX.
2. FOR SIDEWALK WIDTH SEE PLAN. SIDEWALK SHALL HAVE A 3' MIN. WIDTH CLEAR FROM BACK OF CURBING.
3. PROVIDE JOINT SEALER & PREMOULDED EXPANSION JOINT AT ALL BLDG. WALLS, CONSTRUCTION JOINTS AND OTHER FIXED OBJECTS (HYDRANTS, LIGHT POLES, ETC.)
4. SIDEWALK SHALL HAVE LIGHT BROOM FINISH.
5. PROVIDE 1/2" PREMOULDED EXPANSION JOINTS AT 20 FOOT INTERVALS UNLESS OTHERWISE DIRECTED.
6. REINFORCEMENT SHALL NOT EXTEND THROUGH EXPANSION JOINTS.

CONCRETE SIDEWALK — 45

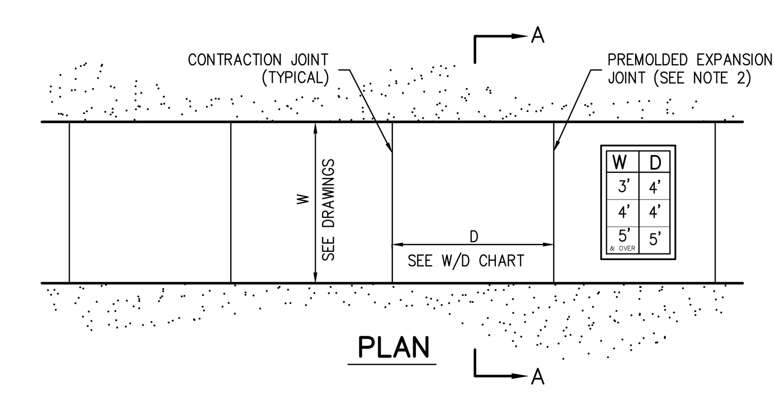

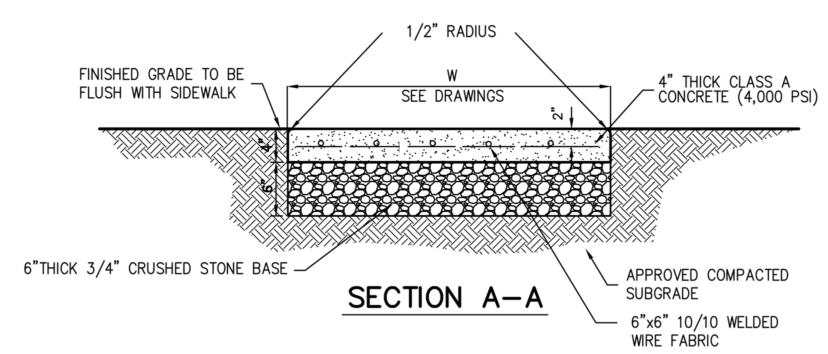

NOTES:

1. SIDEWALK CROSS SLOPE SHALL BE 1% MIN. TO 2% MAX.
2. PROVIDE 1/2" PREMOLDED EXPANSION JOINTS AT 20' INTERVALS UNLESS OTHERWISE DIRECTED.
3. REINFORCING SHALL NOT EXTEND THROUGH EXPANSION JOINTS.
4. SIDEWALK SHALL HAVE LIGHT BROOM FINISH

SITE PAVEMENT (HEAVY DUTY) — 38

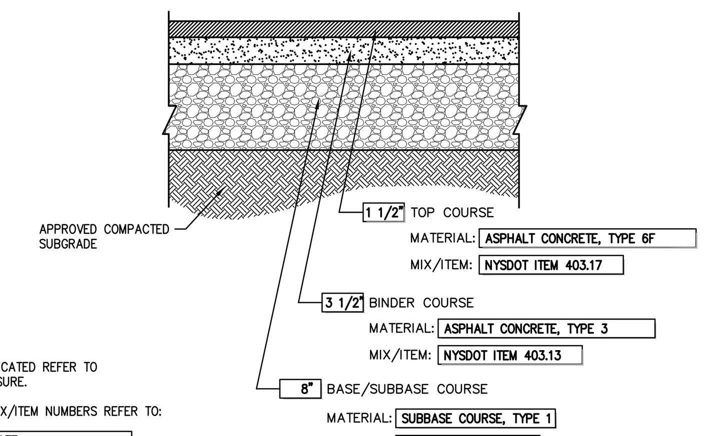

NOTES:

1. THICKNESSES INDICATED REFER TO COMPACTED MEASURE.
2. MATERIAL AND MIX/ITEM NUMBERS REFER TO:

NEW YORK STATE DEPARTMENT OF TRANSPORTATION STANDARD SPECIFICATIONS

CONCRETE CURB ENDING — 40

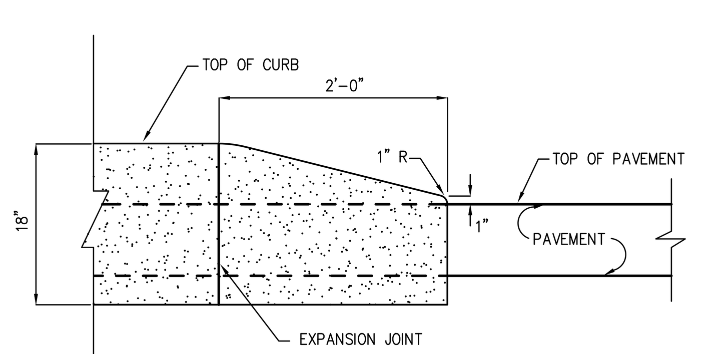

BUILDING PERIMETER MONOLITHIC CURB & SIDEWALK — 42

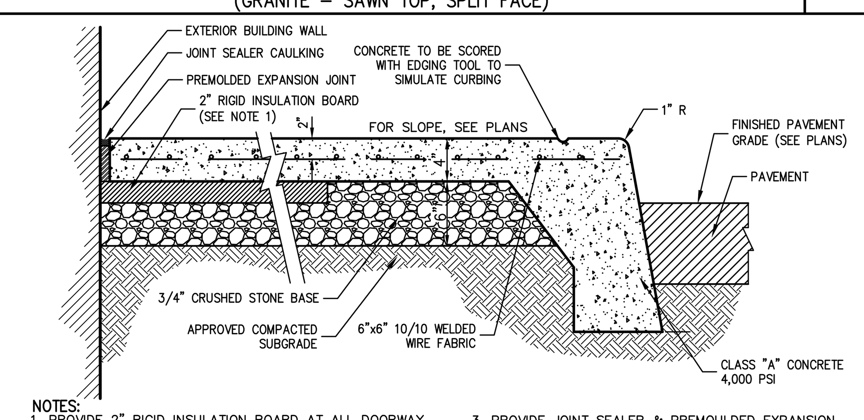

NOTES:

1. PROVIDE 2" RIGID INSULATION BOARD AT ALL DOORWAY OPENINGS AND EXTEND 8' MIN. IN ALL DIRECTIONS OR TO CONSTRUCTION/CONTRACTION JOINT, WHICHEVER IS GREATER.
2. JOINT SEALER CAULKING SHALL BE PSI–641 LOW MODULUS SILICONE SEALANT, BY POLYMERIC SYSTEMS INC. OR APPROVED EQUAL. PREMOULDED EXPANSION JOINT SHALL BE FLEXCELL OR APPROVED EQUAL.
3. PROVIDE JOINT SEALER & PREMOULDED EXPANSION JOINT AT ALL BLDG. WALLS, CONSTRUCTION JOINTS AND OTHER FIXED OBJECTS (HYDRANTS, LIGHT POLES, ETC.)
4. SIDEWALK SHALL HAVE LIGHT BROOM FINISH
5. SIDEWALK CROSS SLOPE SHALL BE 1% MIN. 2% MAX.
6. FOR SIDEWALK WIDTH SEE PLAN. SIDEWALK SHALL HAVE A 3' MIN. WIDTH CLEAR FROM BACK OF CURBING.

MONOLITHIC CONCRETE FLUSH CURB & SIDEWALK — 44

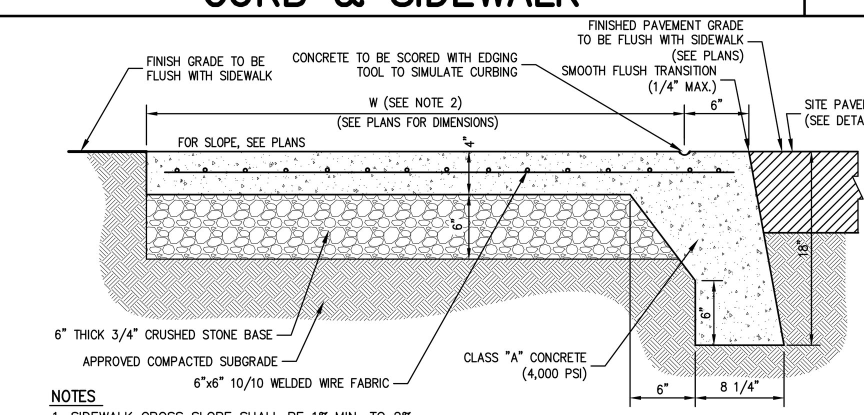

NOTES

1. SIDEWALK CROSS SLOPE SHALL BE 1% MIN. TO 2% MAX.
2. FOR SIDEWALK WIDTH SEE PLAN. SIDEWALK SHALL HAVE A 3' MIN. WIDTH CLEAR FROM BACK OF CURBING.
3. PROVIDE JOINT SEALER & PREMOULDED EXPANSION JOINT AT ALL BLDG. WALLS, CONSTRUCTION JOINTS AND OTHER FIXED OBJECTS (HYDRANTS, LIGHT POLES, ETC.)
4. SIDEWALK SHALL HAVE LIGHT BROOM FINISH.
5. PROVIDE 1/2" PREMOULDED EXPANSION JOINTS AT 20 FOOT INTERVALS UNLESS OTHERWISE DIRECTED.
6. REINFORCEMENT SHALL NOT EXTEND THROUGH EXPANSION JOINTS.

DROP CURB & RAMP (TYPE A) WITH DETECTABLE WARNING — 46

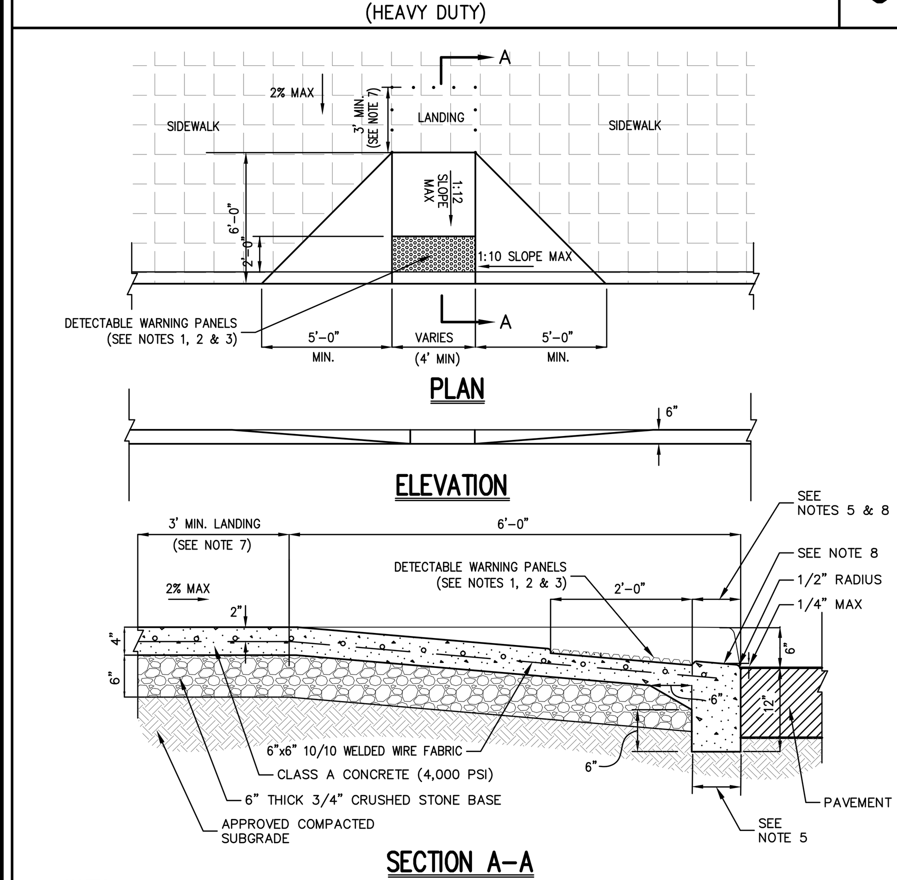

NOTES:

1. RAMPS SHALL HAVE CAST IN PLACE DETECTABLE/TACTILE WARNING SURFACE TILES AS MANUFACTURED BY ARMOR–TILE (OR APPROVED EQUAL) AND SHALL CONSIST OF RAISED TRUNCATED DOMES WITH A DIAMETER OF NOMINAL 0.9 INCHES, A HEIGHT OF NOMINAL 0.2 INCHES AND A CENTER TO CENTER SPACING OF NOMINAL 2.35 INCHES.
2. DETECTABLE WARNING PANELS SHALL CONTRAST VISUALLY WITH ADJOINING SURFACES, EITHER LIGHT–ON–DARK OR DARK–ON–LIGHT IN ACCORDANCE WITH SECTION 4.29.2, FEDERAL REGISTER, VOLUME 56, NO. 144, RULES AND REGULATIONS, APPENDIX A TO PART 36 – STANDARDS FOR ACCESSIBLE DESIGN (AMERICANS WITH DISABILITIES ACT), LATEST EDITION.
3. 24" WIDTH OF PANELS TO BE INSTALLED DIRECTLY BEHIND CURB AND IN ACCORDANCE WITH MANUFACTURER'S SPECIFICATIONS.
4. A MINIMUM OF 3 FEET CLEAR SHALL BE MAINTAINED AT ANY PERMANENT OBSTACLE IN ACCESSIBLE ROUTE (I.E., HYDRANTS, UTILITY POLES, TREE WELLS, SIGNS, ETC.).
5. CURB TREATMENT VARIES, SEE PLANS FOR CURB TYPE AND SEE CURB DETAIL FOR DIMENSIONS.
6. RAMP, CURB AND ADJACENT PAVEMENTS SHALL BE GRADED TO PREVENT PONDING.
7. WHEN LANDING OF RAMP ADJOINS A DOORWAY THEN THE MINIMUM DOORWAY MANEUVERING AREA SHALL BE AT LEAST THE WIDTH OF THE DOORWAY AND SHALL HAVE A MINIMUM DEPTH OF:
   MANUAL SWING DOORS = 60" MIN.
   FULL POWERED AUTOMATIC SLIDING DOORS = 48" MIN.
8. CONTRACTOR TO ENSURE TOP OF CURB MATCHES SLOPE OF RAMP.

DROP CURB & RAMP (TYPE B) WITH DETECTABLE WARNING — 47

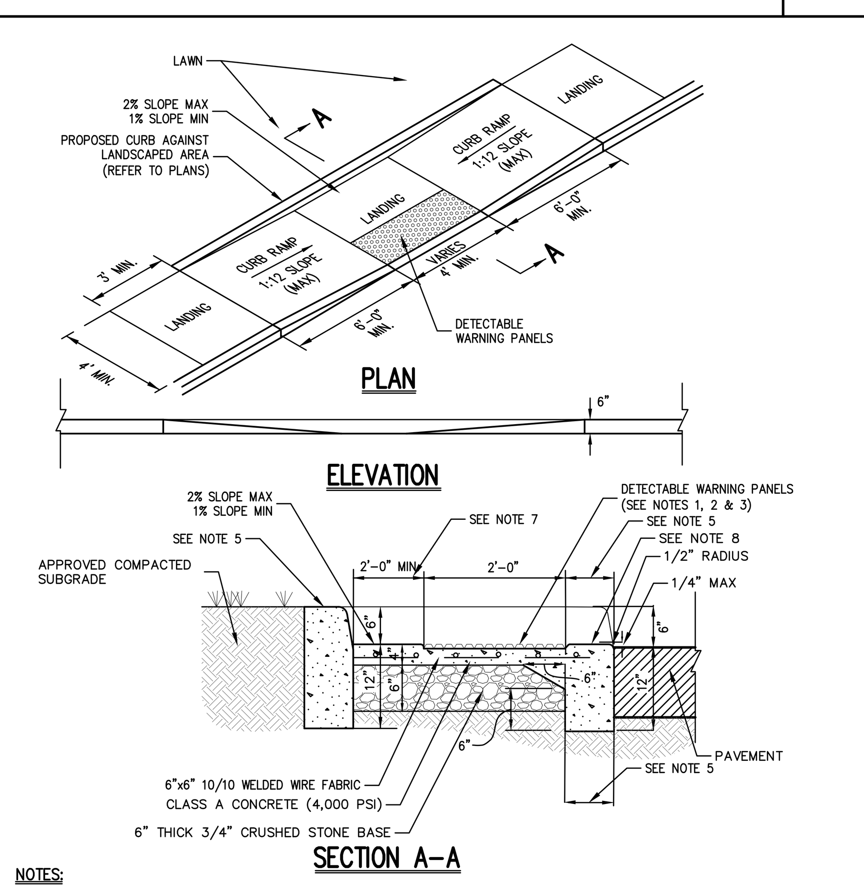

NOTES:

1. RAMPS SHALL HAVE CAST IN PLACE DETECTABLE/TACTILE WARNING SURFACE TILES AS MANUFACTURED BY ARMOR–TILE (OR APPROVED EQUAL) AND SHALL CONSIST OF RAISED TRUNCATED DOMES WITH A DIAMETER OF NOMINAL 0.9 INCHES, A HEIGHT OF NOMINAL 0.2 INCHES AND A CENTER TO CENTER SPACING OF NOMINAL 2.35 INCHES.
2. DETECTABLE WARNING PANELS SHALL CONTRAST VISUALLY WITH ADJOINING SURFACES, EITHER LIGHT–ON–DARK OR DARK–ON–LIGHT IN ACCORDANCE WITH SECTION 4.29.2, FEDERAL REGISTER, VOLUME 56, NO. 144, RULES AND REGULATIONS, APPENDIX A TO PART 36 – STANDARDS FOR ACCESSIBLE DESIGN (AMERICANS WITH DISABILITIES ACT), LATEST EDITION.
3. 24" WIDTH OF PANELS TO BE INSTALLED DIRECTLY BEHIND CURB AND IN ACCORDANCE WITH MANUFACTURER'S SPECIFICATIONS.
4. A MINIMUM OF 3 FEET CLEAR SHALL BE MAINTAINED AT ANY PERMANENT OBSTACLE IN ACCESSIBLE ROUTE (I.E., HYDRANTS, UTILITY POLES, TREE WELLS, SIGNS, ETC.).
5. CURB TREATMENT VARIES, SEE PLANS FOR CURB TYPE AND SEE CURB DETAIL FOR DIMENSIONS.
6. RAMP, CURB AND ADJACENT PAVEMENTS SHALL BE GRADED TO PREVENT PONDING.
7. WHEN LANDING OF RAMP ADJOINS A DOORWAY THEN THE MINIMUM DOORWAY MANEUVERING AREA SHALL BE AT LEAST THE WIDTH OF THE DOORWAY AND SHALL HAVE A MINIMUM DEPTH OF:
   MANUAL SWING DOORS = 60" MIN.
   FULL POWERED AUTOMATIC SLIDING DOORS = 48" MIN.
8. CONTRACTOR TO ENSURE TOP OF CURB MATCHES SLOPE OF RAMP.

90° PARKING (DOUBLE STRIPING – CURBED END) — 48

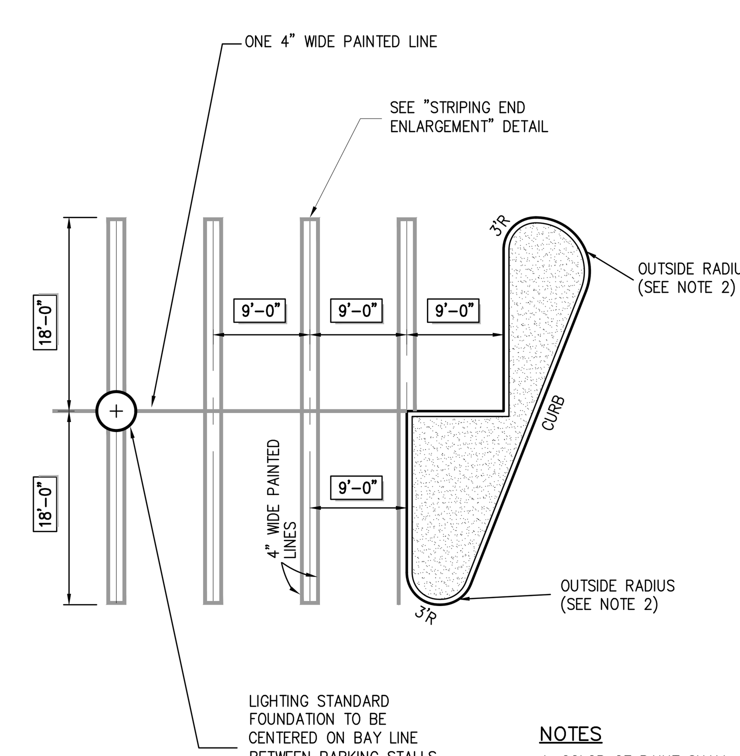

NOTES

1. COLOR OF PAINT SHALL BE XXXXXX
2. OUTSIDE RADIUS MAY VARY DEPENDING ON SHAPE OF ISLAND. RADIUS SHALL BE AS SHOWN ON LAYOUT PLAN.

90° PARKING (DOUBLE STRIPING – CURBED ISLAND) — 49

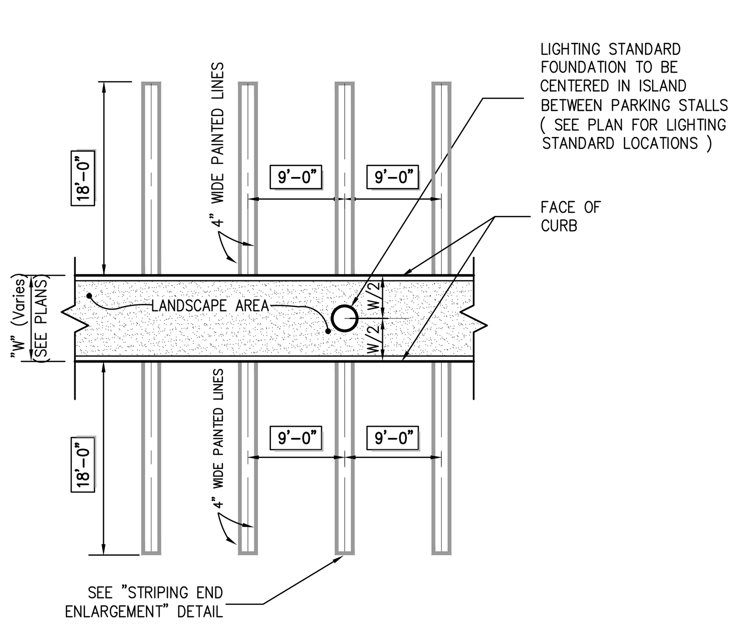

NOTE

1. COLOR OF PAINT SHALL BE XXXXXX

90° PARKING (DOUBLE STRIPING – W/O CURBED ISLAND) — 50

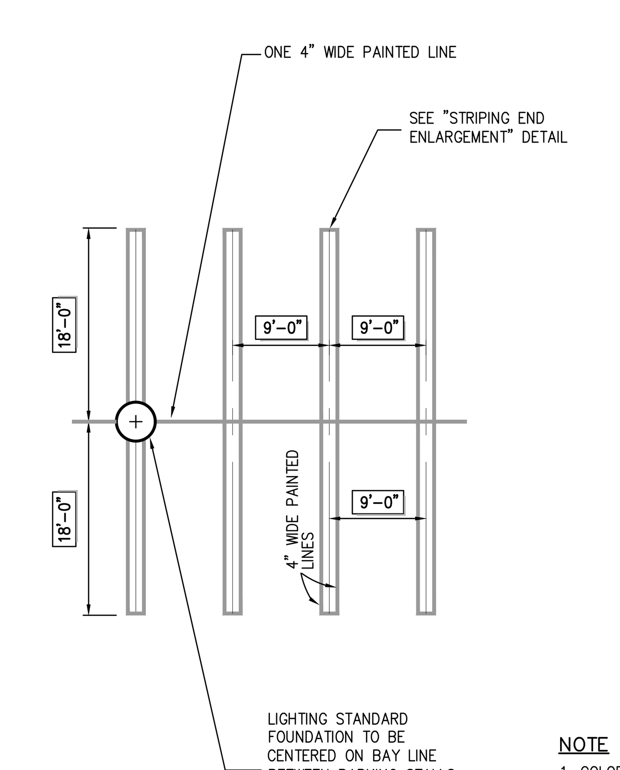

NOTE

1. COLOR OF PAINT SHALL BE XXXXXX

No.	Revision	Date	By

Previous Editions Obsolete

APPLICANT:

FARRELL BUILDING COMPANY
2317 MONTAUK HIGHWAY
BRIDGEHAMPTON, NY 11932

JMC Planning, Engineering, Landscape Architecture & Land Surveying, PLLC
JMC Site Development Consultants, LLC
John Meyer Consulting, Inc.
120 BEDFORD ROAD • ARMONK, NY 10504
voice 914.273.5225 • fax 914.273.2102
www.jmcpllc.com

CONSTRUCTION DETAILS

FARRELL INDUSTRIAL PARK
ROUTE 300
TOWN OF NEWBURGH, NY

ANY ALTERATION OF PLANS, SPECIFICATIONS, PLATS AND REPORTS BEARING THE SEAL OF A LICENSED PROFESSIONAL ENGINEER OR LICENSED LAND SURVEYOR IS A VIOLATION OF SECTION 7209 OF THE NEW YORK STATE EDUCATION LAW, EXCEPT AS PROVIDED FOR BY SECTION 7209, SUBSECTION 2.

Drawn:	TC	Approved:	DL/JS
Scale:	NOT TO SCALE		
Date:	12/03/2020		
Project No:	18156		
18156–DETAILS	C–903	–	
Drawing No:	C–903		

COPYRIGHT © 2020 by JMC All Rights Reserved. No part of this document may be reproduced, stored in a retrieval system, or transmitted in any form or by any means, electronic, mechanical, photocopying, recording or otherwise, without the prior written permission of JMC PLANNING, ENGINEERING, LANDSCAPE ARCHITECTURE & LAND SURVEYING, PLLC | JMC SITE DEVELOPMENT CONSULTANTS, LLC | JOHN MEYER CONSULTING, INC. (JMC). Any modifications or alterations to this document without the written permission of JMC shall render them invalid and unusable.
NOT FOR CONSTRUCTION

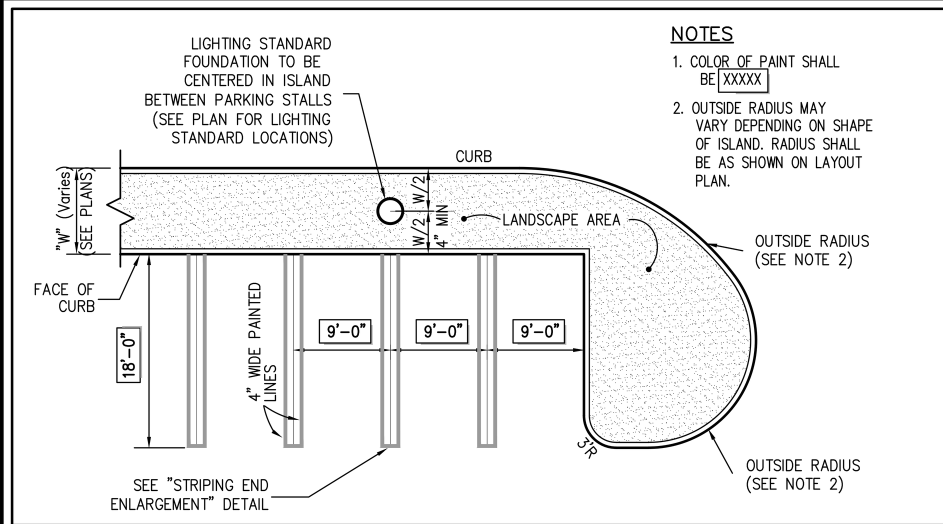

NOTES
1. COLOR OF PAINT SHALL BE XXXXX
2. OUTSIDE RADIUS MAY VARY DEPENDING ON SHAPE OF ISLAND. RADIUS SHALL BE AS SHOWN ON LAYOUT PLAN.

90° PARKING — 51
(DOUBLE STRIPING – CURBED ISLAND AND CURBED END)

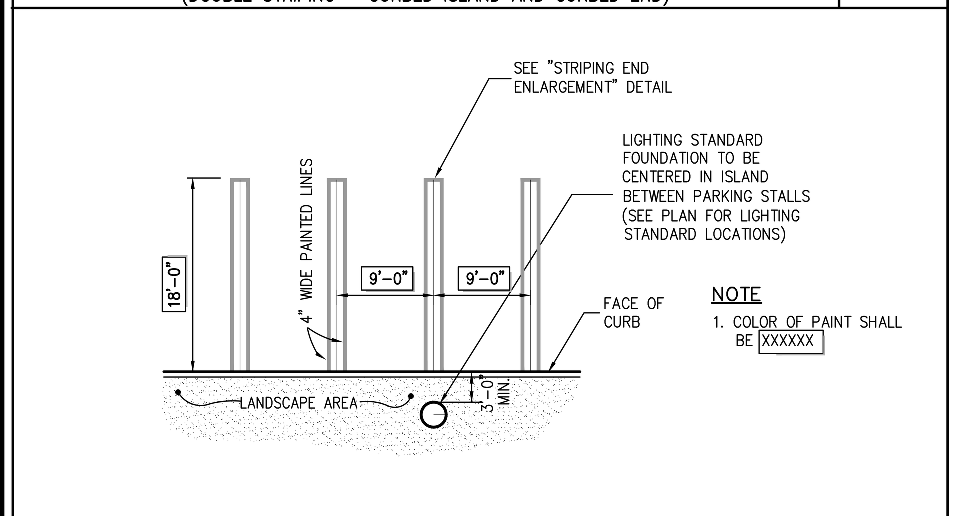

NOTE
1. COLOR OF PAINT SHALL BE XXXXXX

90° PARKING — 52
(DOUBLE STRIPING – CURBED PERIMETER)

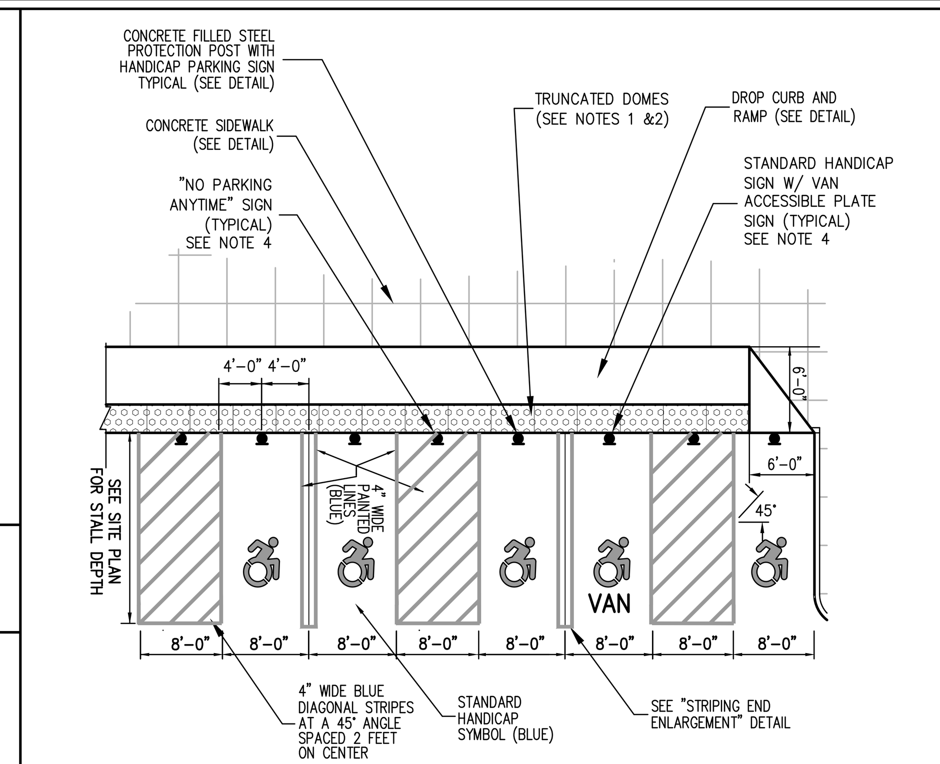

NOTES:

1. RAMPS AND SIDE RAMPS SHALL HAVE DETECTABLE WARNINGS CONSISTING OF RAISED TRUNCATED DOMES WITH A DIAMETER OF NOMINAL 0.9 INCHES, A HEIGHT OF NOMINAL 0.2 INCHES AND A CENTER TO CENTER SPACING OF NOMINAL 2.35 INCHES.
2. TRUNCATED DOMES SHALL CONTRAST VISUALLY WITH ADJOINING SURFACES, EITHER LIGHT–ON–DARK OR DARK–ON–LIGHT IN ACCORDANCE WITH SECTION 4.29.2, FEDERAL REGISTER, VOLUME 56, NO. 144, RULES AND REGULATIONS, APPENDIX A TO PART 36 – STANDARDS FOR ACCESSIBLE DESIGN (AMERICANS WITH DISABILITIES ACT), DATED JULY 26, 1991 AND SUBSEQUENT REVISIONS.
3. SLOPES IN HANDICAP PARKING AREAS SHALL NOT EXCEED 1.5% IN ANY DIRECTION.
4. SEE SITE PLANS/SIGN TABLE FOR SIGN DESIGNATIONS, LOCATIONS AND SPECIFICATIONS.

HANDICAP PARKING — 53
(DOUBLE STRIPING – CURBLINE ALIGNMENT – W/ SIDEWALK – NEW YORK)

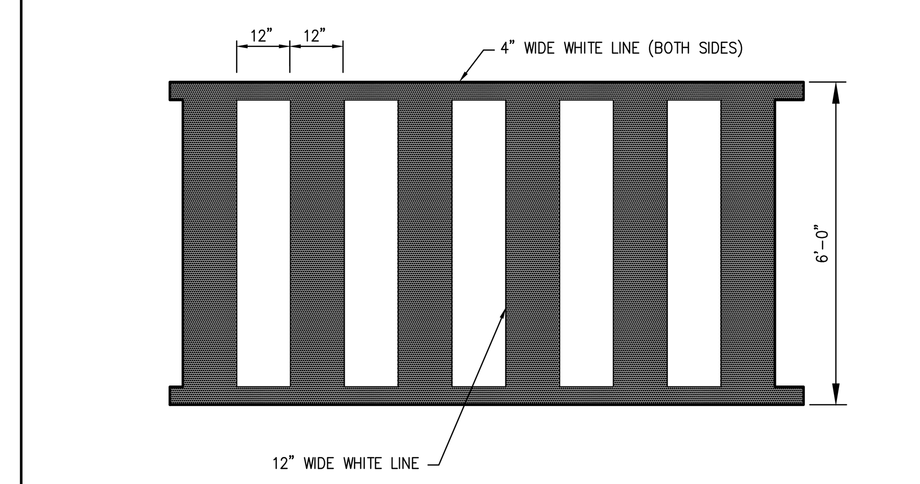

PEDESTRIAN CROSSING — 54

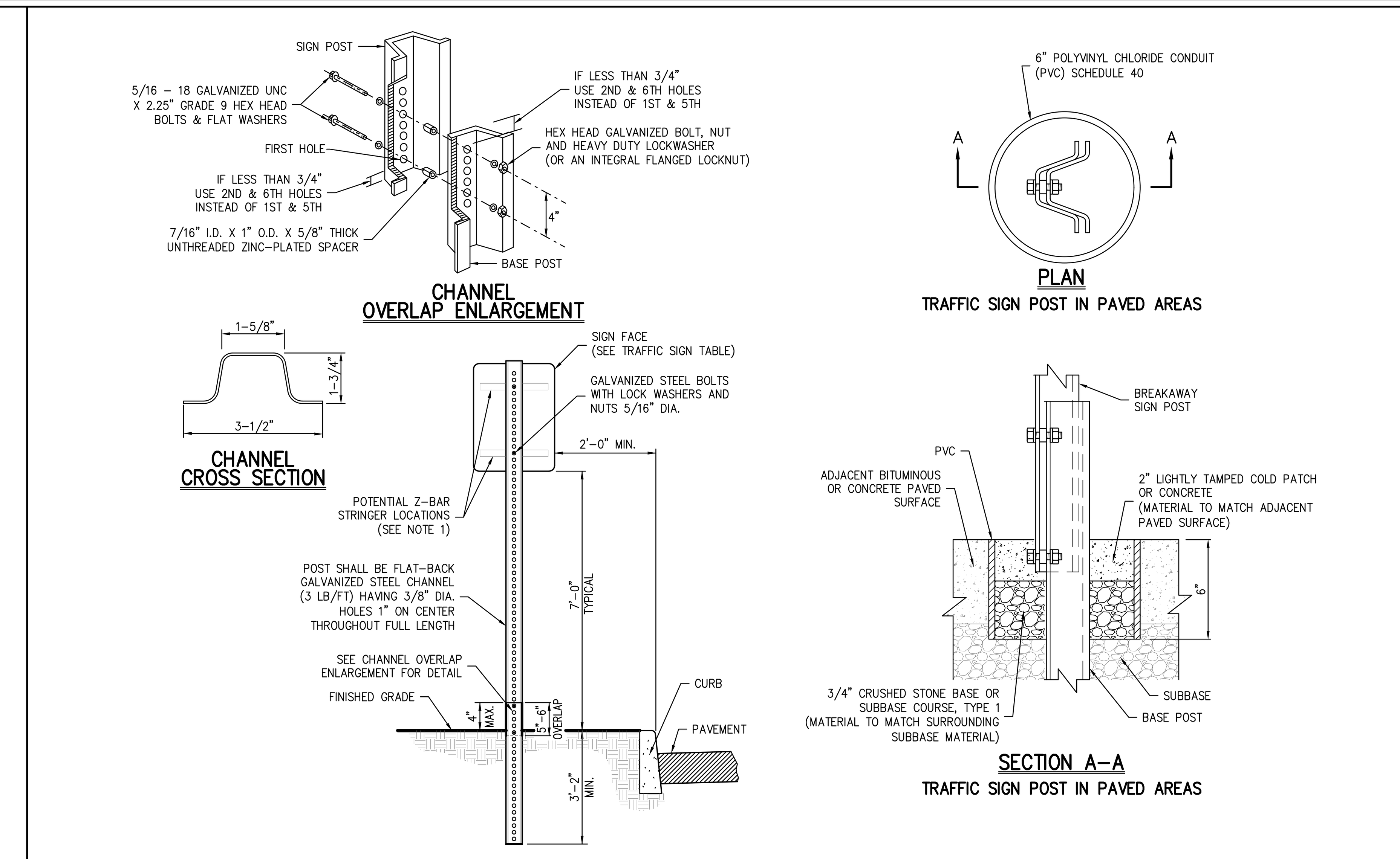

TRAFFIC SIGN POST — 55
(BREAKAWAY STEEL CHANNEL)

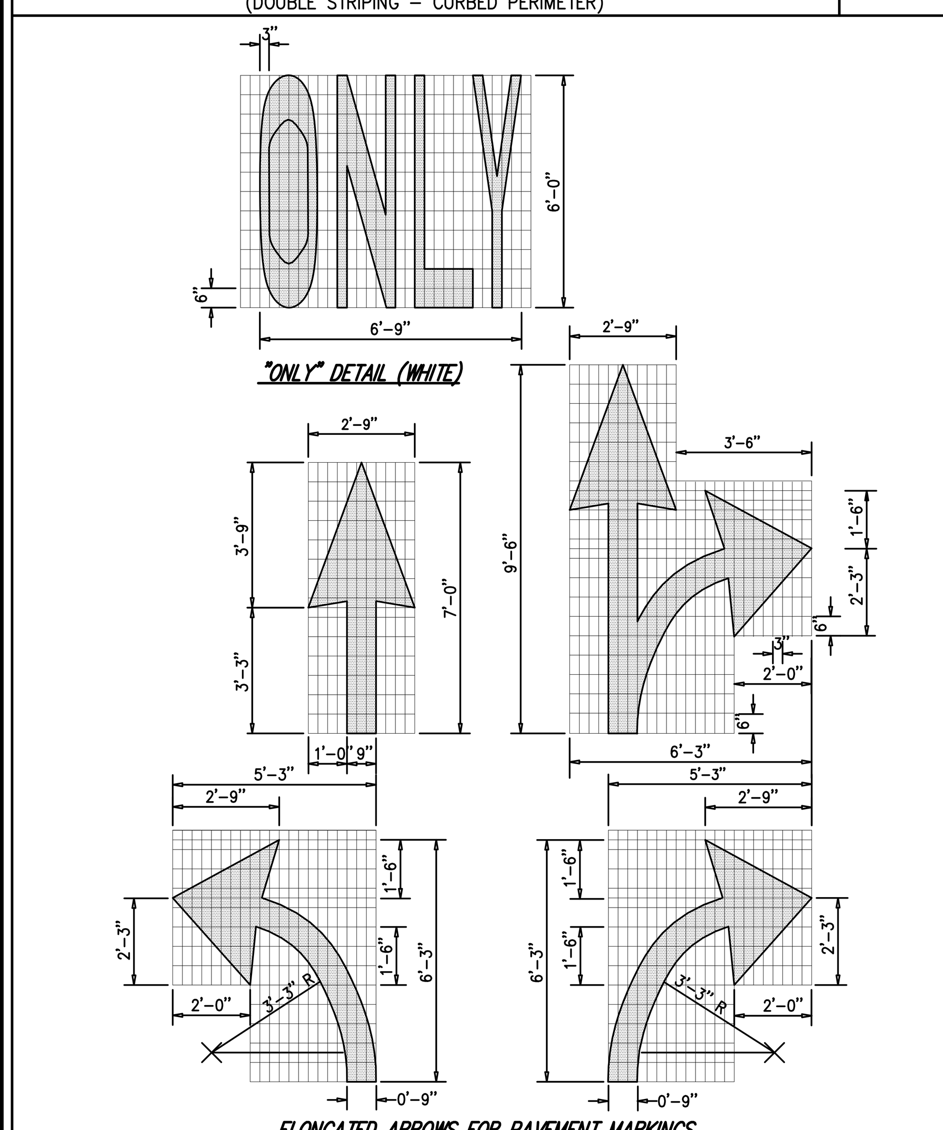

PAVEMENT TEXT & ARROWS — 56
(ON–SITE)

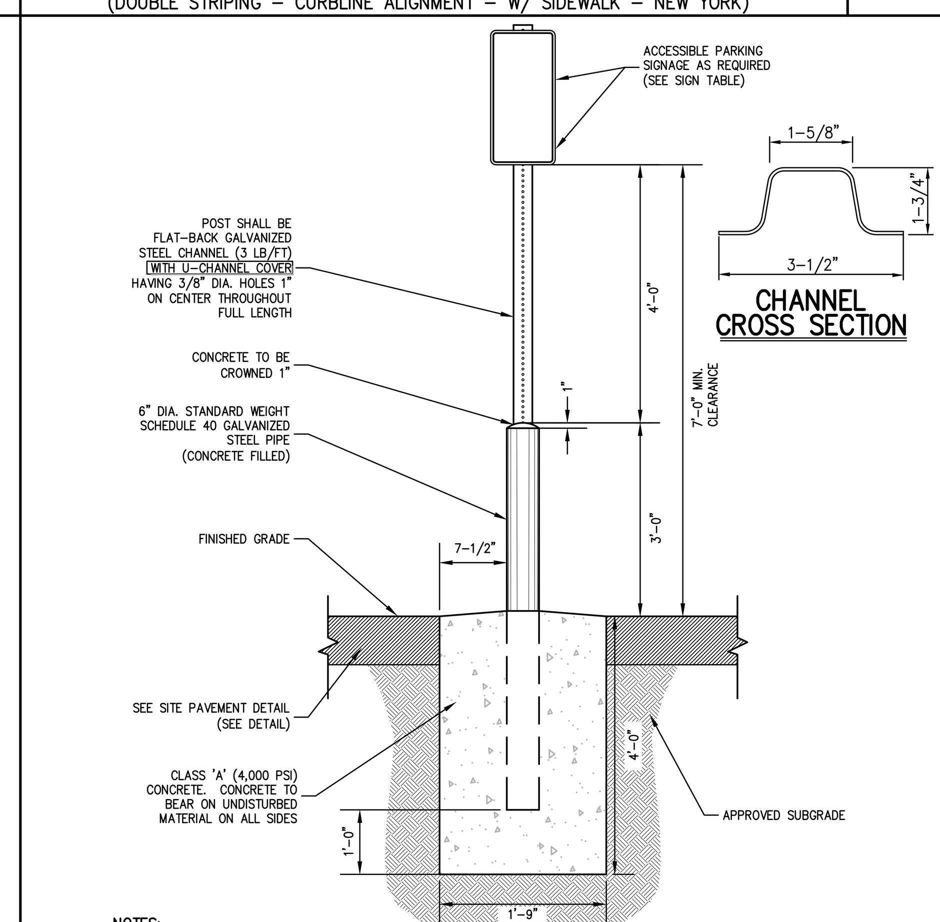

NOTES:

1. GALVANIZED STEEL CHANNEL SHALL BE EMBEDDED A MIN. OF 3 FT. INTO THE CONCRETE
2. POSTS FOR HANDICAP PARKING STALLS AND ACCESS AISLES SHALL BE PAINTED BLUE AS FOLLOWS:
   A. SOLVENT CLEAN TO REMOVE OIL, GREASE AND OTHER CONTAMINANTS.
   B. APPLY METAL PRIMER FOR GALVANIZED SURFACES.
   C. APPLY TWO (2) FINISH COATS OF APPROVED EXTERIOR PAINT FOR METAL SURFACES.
3. CONTRACTOR SHALL BE RESPONSIBLE FOR COORDINATING THE INSTALLATION OF THE PARKING SIGNS, BOLLARDS AND FOUNDATIONS WITH THE DESIGN AND INSTALLATION OF THE SITE SIDEWALKS, CURBING, PAVEMENT AND ANY OTHER SITE FEATURES SHOWN ON THE PLANS.
4. FASTEN SIGN TO POSTS WITH GALVANIZED STEEL BOLTS, LOCK WASHERS, AND NUTS (5/16" DIA.)
5. U–CHANNEL COVERS FOR POSTS SHALL BE BLUE WITH WHITE STRIPE FOR HANDICAP PARKING STALLS AND HANDICAP ACCESS AISLES.

ACCESSIBLE PARKING SIGN DETAIL — 57

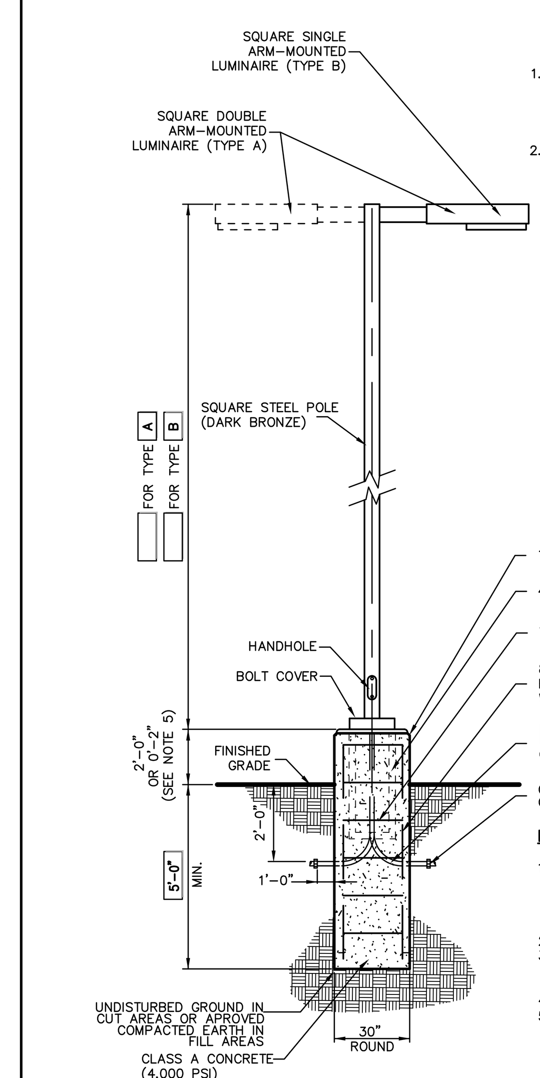

LUMINAIRE & POLE SPECIFICATIONS
1. TYPE A LIGHTING STANDARD (DOUBLE ARM–MOUNTED)
   LUMINAIRE:
   POLE:
2. TYPE B LIGHTING STANDARD (SINGLE ARM–MOUNTED)
   LUMINAIRE:
   POLE:

LUMINAIRES AND POLES ARE TO BE THE PRODUCT OF OR APPROVED EQUAL.

NOTES
1. IT SHALL BE THE CONTRACTOR'S RESPONSIBILITY TO CHECK AND VERIFY ALL ANCHOR BOLT DIMENSIONS (SIZE, BOLT CIRCLE, ETC.) WITH THE POLE MANUFACTURER PRIOR TO INSTALLATION OF THE FOUNDATIONS.
2. CHAMFER EXPOSED EDGES OF ALL FOUNDATIONS.
3. PROVIDE INSULATED GROUNDING BUSHING ON EXPOSED ENDS (IN BASE OF POLE) OF ALL GALVANIZED STEEL BENDS.
4. COLOR OF LUMINAIRE SHALL MATCH COLOR OF POLE.
5. CONCRETE BASE SHALL HAVE A 2'–0" EXTENSION ABOVE FINISHED GRADE FOR LIGHT DESIGNATION A,B & C, AND 0'–2" EXTENSION ABOVE FINISHED GRADE FOR LIGHT DESIGNATIONS A–1, B–1 & C–1 (SEE PLANS).

LIGHTING STANDARD — 58
(ARM MOUNTED)

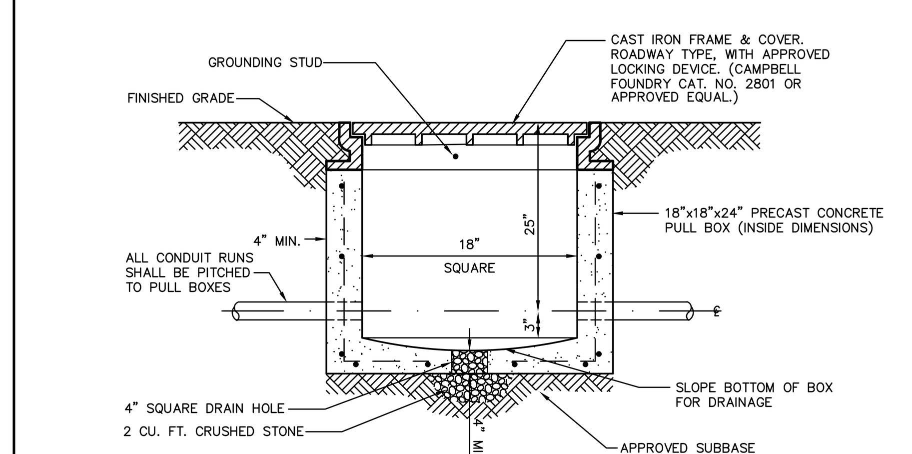

NOTE:
PRECAST CONCRETE PULL BOX TO BE DESIGNED FOR H–20 DESIGN LOAD.

ELECTRICAL PULL BOX — 59

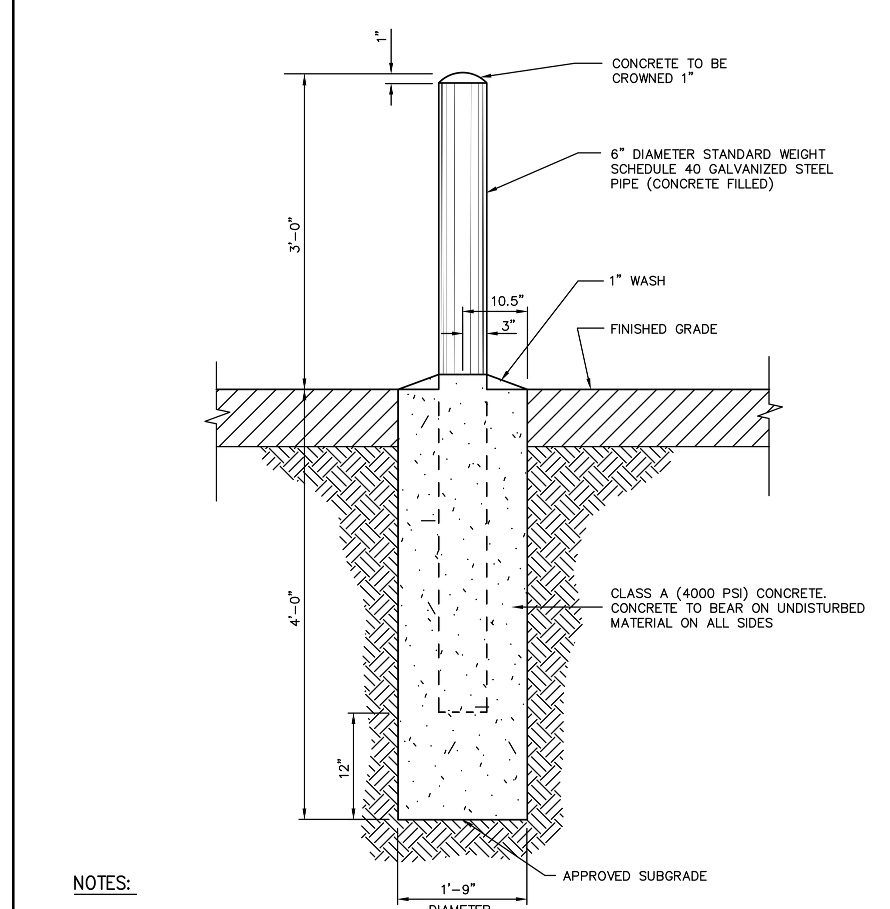

NOTES:
1. WHEN PROTECTION POSTS ARE TO BE USED FOR PROTECTION OF HANDICAP PARKING SIGNS OR OTHER TRAFFIC SIGNS, SIGN SUPPORTING POSTS SHALL BE IMBEDDED A MINIMUM OF THREE (3) FEET INTO THE CONCRETE.
2. POST FOR HANDICAP PARKING STALLS SHALL BE PAINTED BLUE AS FOLLOWS:
   A. SOLVENT CLEAN TO REMOVE OIL, GREASE AND OTHER CONTAMINANTS.
   B. APPLY METAL PRIMER FOR GALVANIZED SURFACES.
   C. APPLY TWO (2) FINISH COATS OF APPROVED EXTERIOR PAINT FOR METAL SURFACES.

STEEL PIPE PROTECTION POST — 60

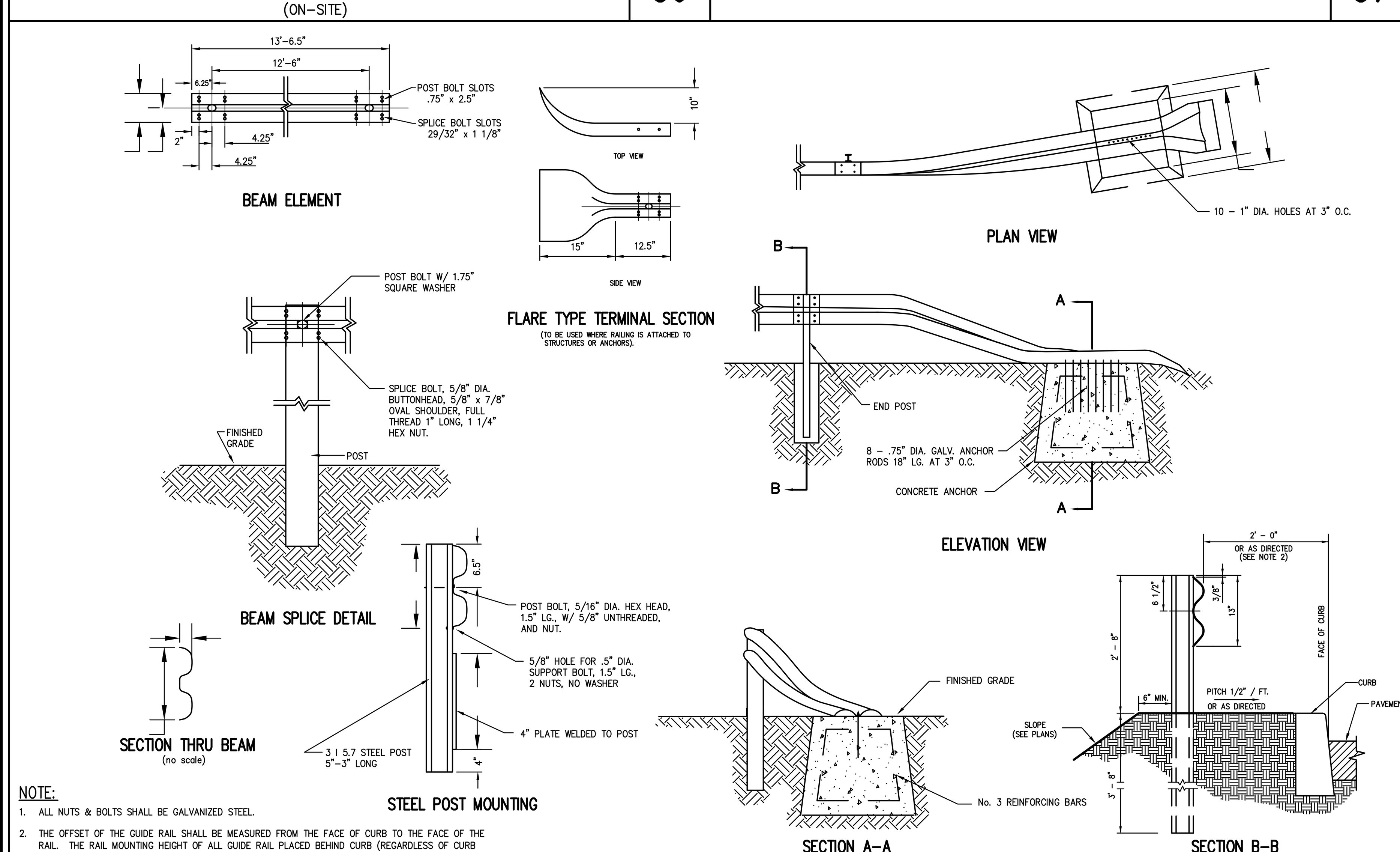

NOTE:
1. ALL NUTS & BOLTS SHALL BE GALVANIZED STEEL.
2. THE OFFSET OF THE GUIDE RAIL SHALL BE MEASURED FROM THE FACE OF CURB TO THE FACE OF THE RAIL. THE RAIL MOUNTING HEIGHT OF ALL GUIDE RAIL PLACED BEHIND CURB (REGARDLESS OF CURB HEIGHT OR SPEED) SHALL BE MEASURED FROM THE PAVEMENT WHEN THE OFFSET IS 1'–0" OR LESS AND TO THE GROUND SURFACE UNDER THE FACE OF THE RAIL WHEN THE OFFSET IS GREATER THAN 1'–0".

CORRUGATED STEEL GUIDE RAIL — 61
(HIGHWAY)

X

X

X

NOT FOR CONSTRUCTION

COPYRIGHT © 2020 by JMC All Rights Reserved. No part of this document may be reproduced, stored in a retrieval system, or transmitted in any form or by means, electronic, mechanical, photocopying, recording or otherwise, without the prior written permission of JMC PLANNING, ENGINEERING, LANDSCAPE ARCHITECTURE & LAND SURVEYING, PLLC | JMC SITE DEVELOPMENT CONSULTANTS, LLC | JOHN MEYER CONSULTING, INC. (JMC). Any modifications or alterations to this document without the written permission of JMC shall render them invalid and unusable.

No.	Revision	Date	By

Previous Editions Obsolete

APPLICANT:
FARRELL BUILDING COMPANY
2317 MONTAUK HIGHWAY
BRIDGEHAMPTON, NY 11932

JMC Planning, Engineering, Landscape Architecture & Land Surveying, PLLC
JMC Site Development Consultants, LLC
John Meyer Consulting, Inc.
120 BEDFORD ROAD • ARMONK, NY 10504
voice 914.273.5225 • fax 914.273.2102
www.jmcpllc.com

CONSTRUCTION DETAILS
FARRELL INDUSTRIAL PARK
ROUTE 300
TOWN OF NEWBURGH, NY

ANY ALTERATION OF PLANS, SPECIFICATIONS, PLATS AND REPORTS BEARING THE SEAL OF A LICENSED PROFESSIONAL ENGINEER OR LICENSED LAND SURVEYOR IS A VIOLATION OF SECTION 7209 OF THE NEW YORK STATE EDUCATION LAW, EXCEPT AS PROVIDED FOR BY SECTION 7209, SUBSECTION 2.

Drawn: TC Approved: DL/JS
Scale: NOT TO SCALE
Date: 12/03/2020
Project No: 18156
18156–DETAILS C–904 –
Drawing No:
C–904

SILT FENCE — 1

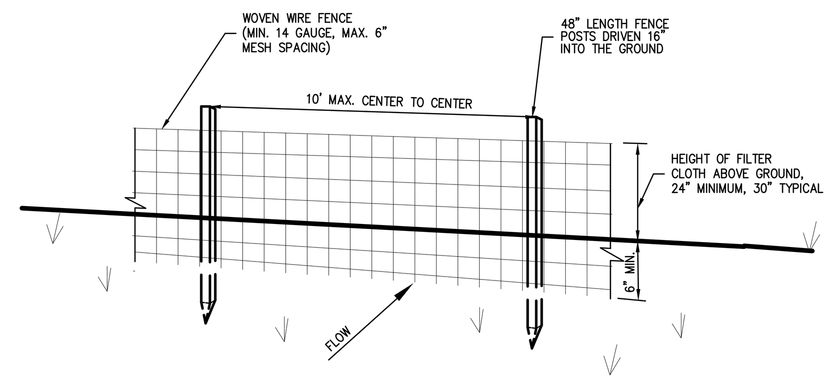

PERSPECTIVE VIEW

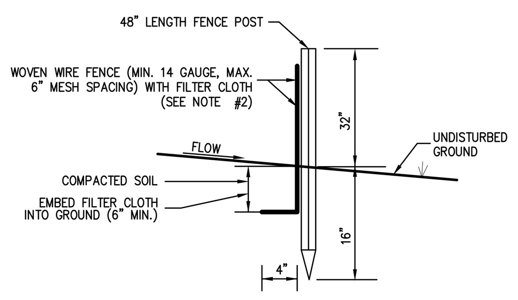

SECTION

SLOPE	STEEPNESS	SLOPE LENGTH/FENCE LENGTH (FT.)
2–10%	50:1 TO 10:1	250/2000
10–20%	10:1 TO 5:1	150/1000
20–33%	5:1 TO 3:1	80/750
33–50%	3:1 TO 2:1	70/350
>50%	>2:1	30/175

*ALL SILT FENCES SHALL BE PLACED AS CLOSE TO THE DISTURBED AREA AS POSSIBLE, BUT AT LEAST 10 FEET FROM THE TOE OF A SLOPE STEEPER THAN 3H:1V, TO ALLOW FOR MAINTENANCE AND ROLL DOWN. THE AREA BEYOND THE FENCE MUST BE UNDISTURBED OR STABILIZED.

NOTES:

1. WOVEN WIRE FENCE SHALL BE FASTENED SECURELY TO FENCE POSTS WITH WIRE TIES OR STAPLES. POSTS SHALL BE STEEL, EITHER T OR U TYPE OR HARDWOOD.
2. FILTER CLOTH SHALL BE FASTENED SECURELY TO WOVEN WIRE FENCE WITH TIES SPACED EVERY 24" AT TOP AND MID SECTION. FENCE SHALL BE WOVEN WIRE, 6" MAXIMUM MESH OPENING.
3. WHEN TWO SECTIONS OF FILTER CLOTH ADJOIN EACH OTHER, THEY SHALL BE OVERLAPPED BY SIX INCHES AND FOLDED. FILTER CLOTH SHALL BE EITHER FILTER X, MIRAFI 100X, STABLINKA T140N, OR APPROVED EQUAL.
4. PREFABRICATED UNITS SHALL BE GEOFAB, ENVIROFENCE, OR APPROVED EQUAL.
5. MAINTENANCE SHALL BE PERFORMED AS NEEDED AND MATERIAL REMOVED AND REPLACED WHEN "BULGES" DEVELOP IN THE SILT FENCE.

TYPE II TRENCH — 2

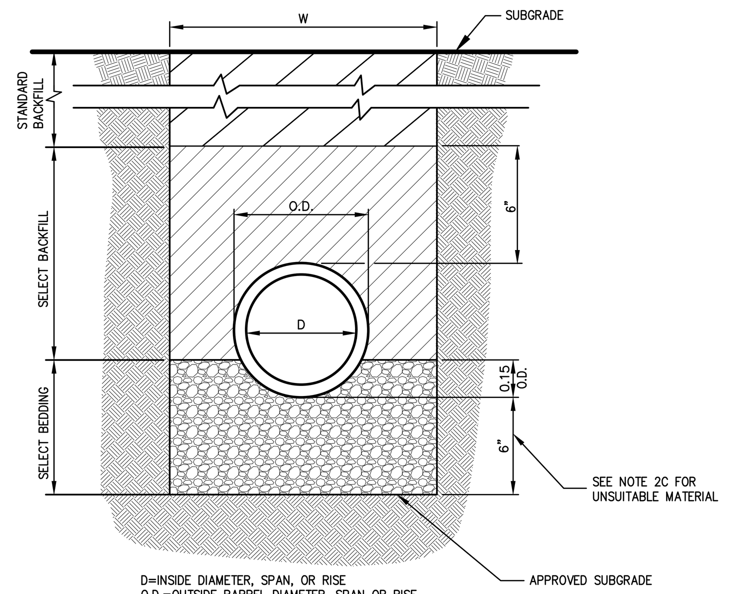

D=INSIDE DIAMETER, SPAN, OR RISE
O.D.=OUTSIDE BARREL DIAMETER, SPAN OR RISE
H.D.=OUTSIDE DIAMETER, SPAN, OR RISE @ BELL OR BAND
W=H.D. + 2.0' – FOR 48" OR SMALLER DIAMETER, SPAN, OR RISE
W=H.D. + 2.5' – FOR GREATER THAN 48" DIAMETER, SPAN, OR RISE

NOTES:

1. FOR TYPE II TRENCH, MATERIAL FOR SELECT BEDDING AND SELECT BACKFILL SHALL BE:
   A. EITHER SAND OR CRUSHED STONE IF NO WATER IS ENCOUNTERED IN TRENCH.
   B. 3/4"CRUSHED STONE IF WATER IS ENCOUNTERED IN TRENCH.
2. TYPE II TRENCH SHALL BE USED IN ALL OF THE FOLLOWING CASES:
   A. FOR ALL CORRUGATED POLYETHYLENE DRAIN PIPE (CPDP) AND PVC PIPE AND CONDUIT INSTALLATION.
   B. WHEN ROCK OR HARDPAN IS ENCOUNTERED IN BOTTOM OF TRENCH.
   C. WHEN UNSUITABLE MATERIAL IS ENCOUNTERED IN BOTTOM OF TRENCH. IN SUCH CASE DEPTH OF UNDERCUTTING SHALL BE AS DIRECTED BY THE ENGINEER WITH 6" MINIMUM.
3. FOR ALL TRENCH EXCAVATION IN FILL AREAS, ALL EMBANKMENTS SHALL BE CONSTRUCTED TO A MINIMUM OF 2 FEET ABOVE THE OUTSIDE TOP (AT THE BELL) OF THE PIPE PRIOR TO BEGINNING ANY TRENCH EXCAVATION.
4. BACKFILL FOR PIPE AND CONDUIT SHALL BE PLACED EVENLY AND CAREFULLY AROUND AND OVER THE PIPE OR CONDUIT IN SIX (6) INCH MAXIMUM LAYERS. EACH LAYER SHALL BE THOROUGHLY AND CAREFULLY COMPACTED UNTIL TWELVE (12) INCHES OF COVER EXISTS OVER THE PIPE OR CONDUIT. THE REMAINDER OF THE BACKFILL MAY THEN BE PLACED AND COMPACTED IN A MAXIMUM OF TWELVE (12) INCH LAYERS. EACH LAYER SHALL BE COMPACTED BY APPROVED MECHANICAL TAMPING MACHINES. UNLESS OTHERWISE SPECIFIED BACKFILL SHALL BE COMPACTED TO NOT LESS THAN 92% MAXIMUM MODIFIED DENSITY IN ACCORDANCE WITH ASTM DESIGNATION D-1557 IN THE MANNER HEREIN DESCRIBED. BACKFILL SHALL PROCEED UP TO THE LINES AND GRADES AS SHOWN ON THE DRAWINGS.

ABSORPTION TRENCH — 3

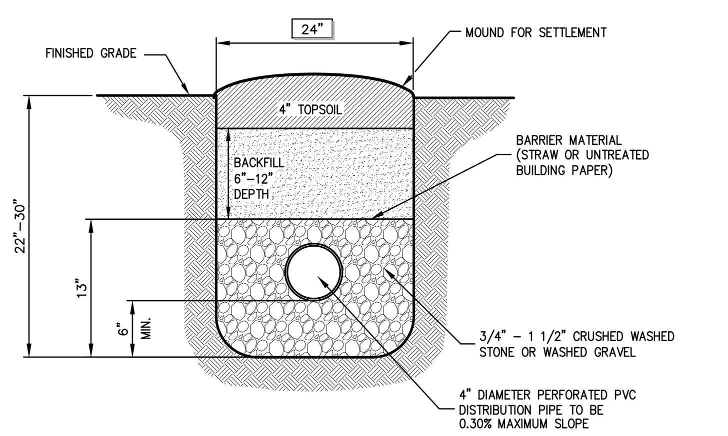

NOTES:

1. PERFORATED LATERALS SHALL BE SET LEVEL.
2. PERFORATIONS SHALL FACE DOWN.
3. DO NOT INSTALL IN WET SOIL. RAKE SIDES AND BOTTOM OF TRENCH PRIOR TO PLACING AGGREGATE.
4. ENDS OF LATERALS MUST BE CAPPED.
5. THERE SHALL BE 4' OF UNDISTURBED SOIL BETWEEN TRENCHES.
6. TRENCHES SHALL BE 6' (MINIMUM) ON CENTER.
7. TRENCH BOTTOMS SHALL BE LEVEL.

MANHOLE (TYPE A) — 4

(H < 5'–0")

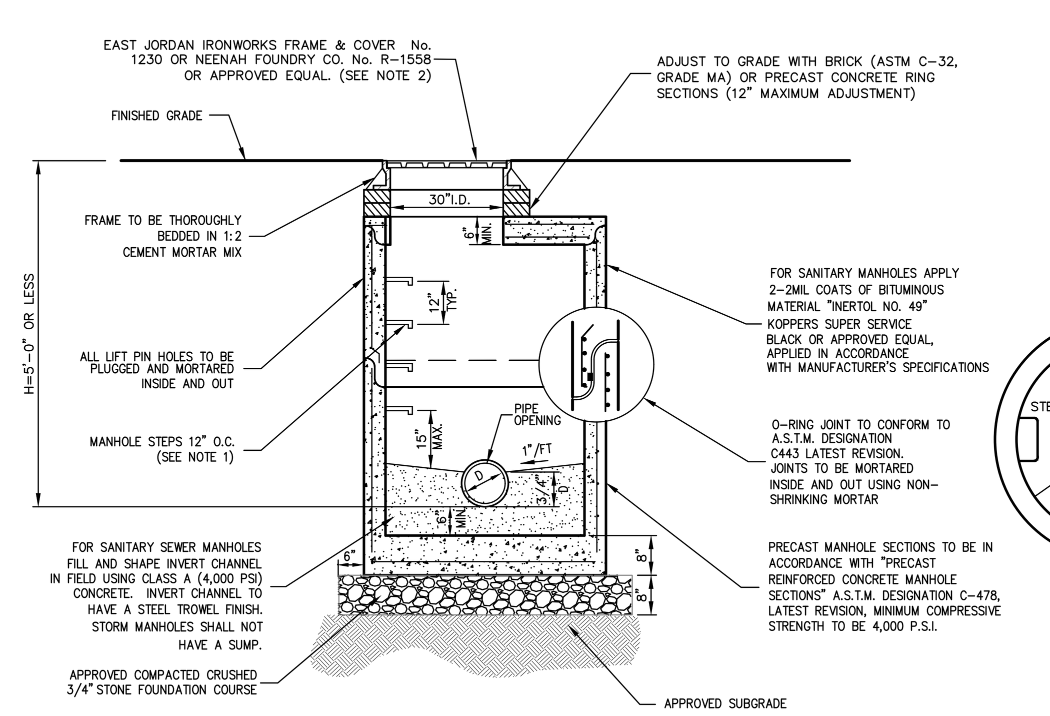

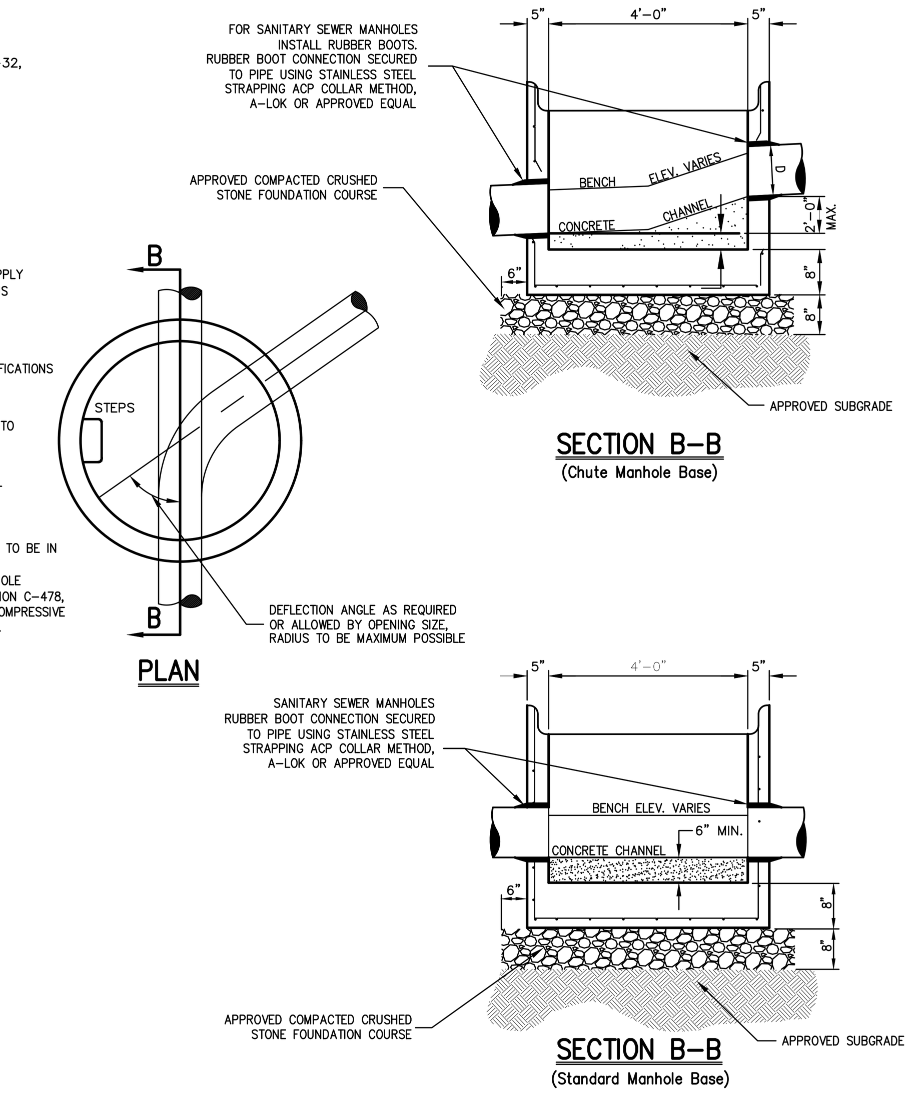

NOTES:

1. MANHOLE STEPS SHALL BE CAST IRON NEENAH No. R-1981-0 OR CAMPBELL FOUNDRY No. 2588-1 OR POLYPROPYLENE COATED STEEL (SEE SPECIFICATIONS) OR APPROVED EQUAL.
2. UNLESS OTHERWISE SPECIFIED, SANITARY SEWER MANHOLES SHALL HAVE LETTERS "SEWER" AND STORM DRAIN MANHOLES SHALL HAVE LETTERS "DRAIN" CAST ON COVER. THE COVERS SHALL HAVE VENT HOLES.
3. MANHOLES SHALL MEET OR EXCEED A.S.T.M. AND O.S.H.A. REQUIREMENTS.
4. SEE "NOTES PERTAINING TO MANHOLES" UNDER "UTILITY NOTES" ON DRAWING XXXX

MANHOLE (TYPE B) — 5

(H > 5'–0" < 10'–0")

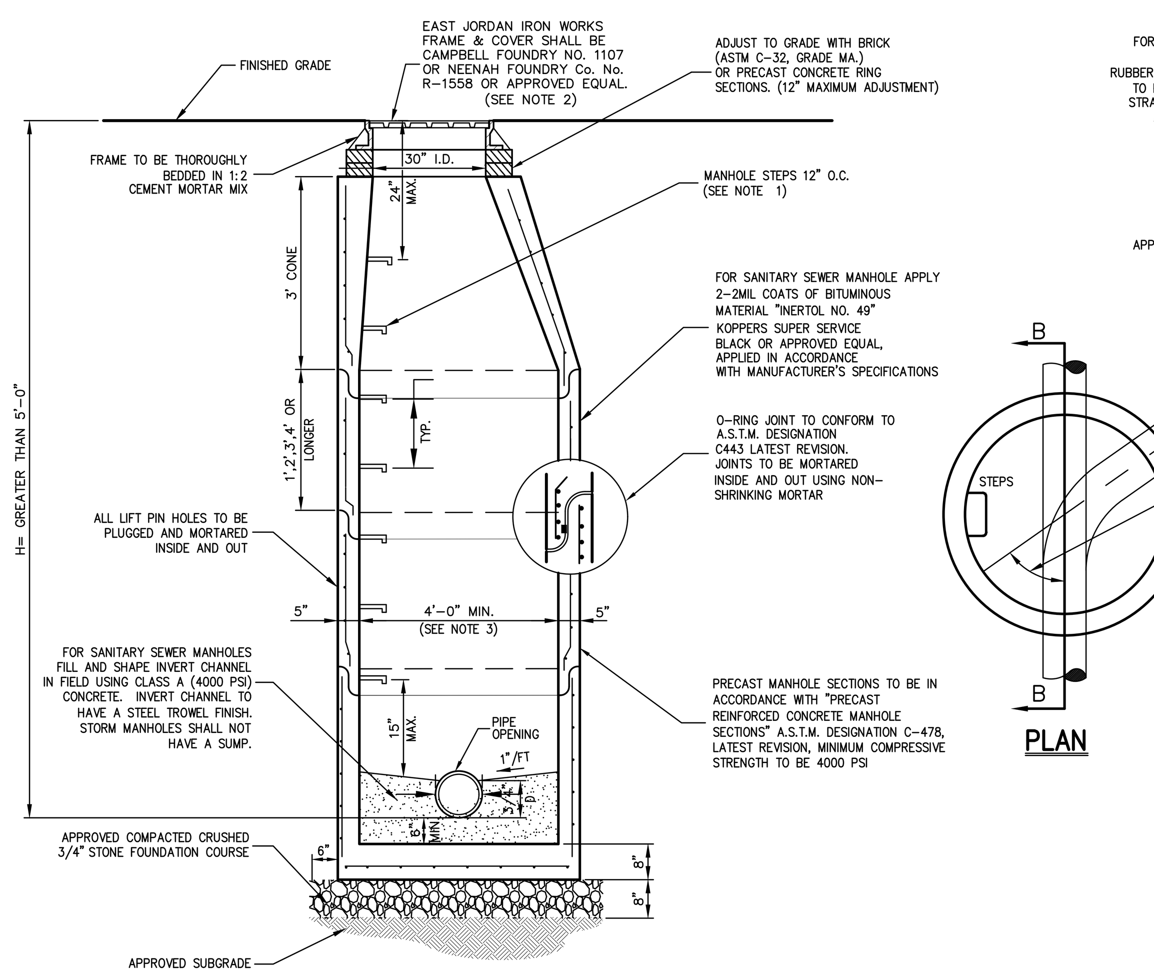

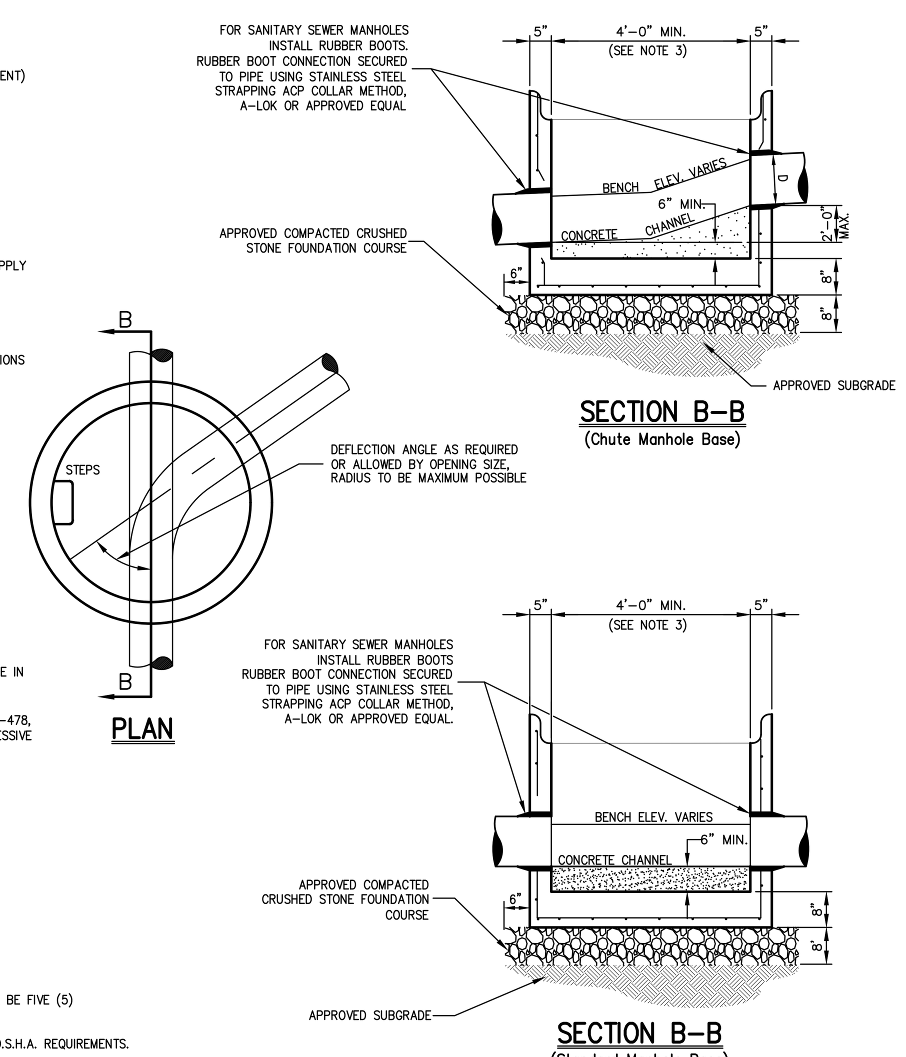

NOTES:

1. MANHOLE STEPS SHALL BE CAST IRON NEENAH No. R-1981-0 OR CAMPBELL FOUNDRY No. 2588-1 OR POLYPROPYLENE COATED STEEL (SEE SPECIFICATIONS) OR APPROVED EQUAL.
2. UNLESS OTHERWISE SPECIFIED, SANITARY SEWER MANHOLES SHALL HAVE LETTERS "SEWER" AND STORM DRAIN MANHOLES SHALL HAVE LETTERS "DRAIN" CAST ON COVER. THE COVERS SHALL HAVE VENT HOLES.
3. MANHOLES WITH DEPTH (h) 10' OR GREATER SHALL BE FIVE (5) FEET IN DIAMETER.
4. MANHOLES SHALL MEET OR EXCEED A.S.T.M. AND O.S.H.A. REQUIREMENTS.
5. SEE "NOTES PERTAINING TO MANHOLES" UNDER "UTILITY NOTES" ON DRAWING XXXX

8–OUTLET DISTRIBUTION BOX — 6

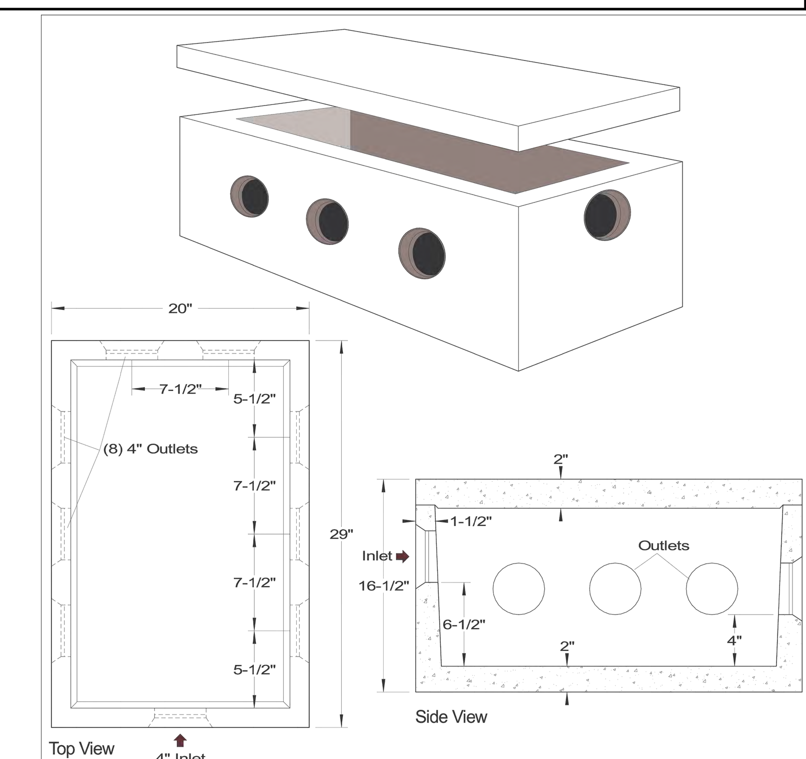

SPECIFICATIONS	PRECAST DISTRIBUTION BOXES MODEL DB-9 / 8 OUTLET BOX
Concrete Min. Strength: 4,000 psi at 28 days Reinforcement: Fiber, 10ga. wire mesh Air Entrainment: 5% Pipe Connection: Polylok Seal (patented) Load Rating: 300 psf Weight = 290 lbs	Woodard's Concrete Products, Inc. 629 Lybolt Road, Bullville, NY 10915 (845) 361-3471 / Fax 361-1050 Page 5B 1/12/05

NOTES:

1. PIPE PENETRATION SHALL INCORPORATE POLYLOK SEALS
2. CONTRACTOR SHALL ONLY USE THE AMOUNT OF PENETRATIONS REQUIRED
3. SPEED LEVELERS ARE REQUIRED TO AID IN THE EQUAL DISTRIBUTION OF EFFLUENT TO ALL LATERALS
4. MAXIMUM EARTH COVER SHALL BE 12"
5. BOX SHALL BE SET ON A MINIMUM OF 12" CRUSHED STONE BEDDING BELOW FROST LINE TO ASSURE THAT ALL OUTLET INVERTS ARE AND SHALL BE MAINTAINED AT THE SAME ELEVATION

4–OUTLET CUE BOX SYSTEM — 8

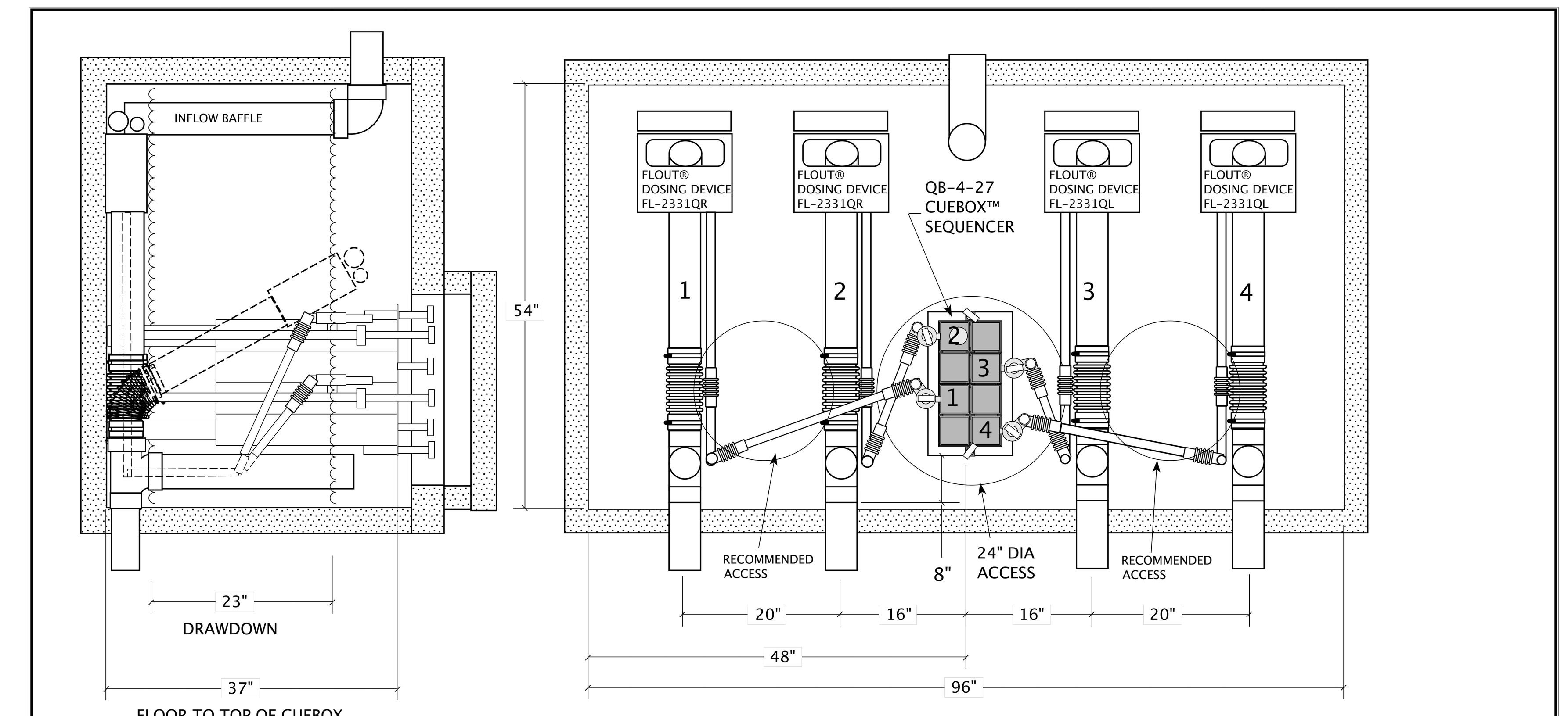

NOTES:

1. MAXIMUM EARTH COVER SHALL BE 12"
2. BOX SHALL BE SET ON A MINIMUM OF 12" CRUSHED STONE BEDDING BELOW FROST LINE TO ASSURE THAT ALL OUTLET INVERTS ARE AND SHALL BE MAINTAINED AT THE SAME ELEVATION.

A PROPOSED DOSING CHAMBER WITH FOUR FLOUT® DOSING DEVICES EACH WITH ONE 3 INCH DIAMETER OUTLET . DOSING SEQUENCE CONTROLLED BY A CUEBOX™ SEQUENCER. 23 INCH DRAWDOWN.
DOSING DEVICES BY RISSY PLASTICS, 350 CEDAR LANE TORRINGTON, CT 06790 860-482-1645 RISSYPLASTICS.COM
FLOUT.NET TANXRUS@AOL.COM PRECAST CONCRETE/ OTHER MATERIAL CHAMBER BY OTHERS

FLOUT® US PATENT 5290434 CUEBOX™ US PATENT PENDING ©2010 JAMES RICHARD DRAWING BY JAMES RICHARD

SCALE: 1 INCH = 1 FOOT SYSTEM : FLQ-2331X4

3,500 GALLON SEPTIC TANK — 9

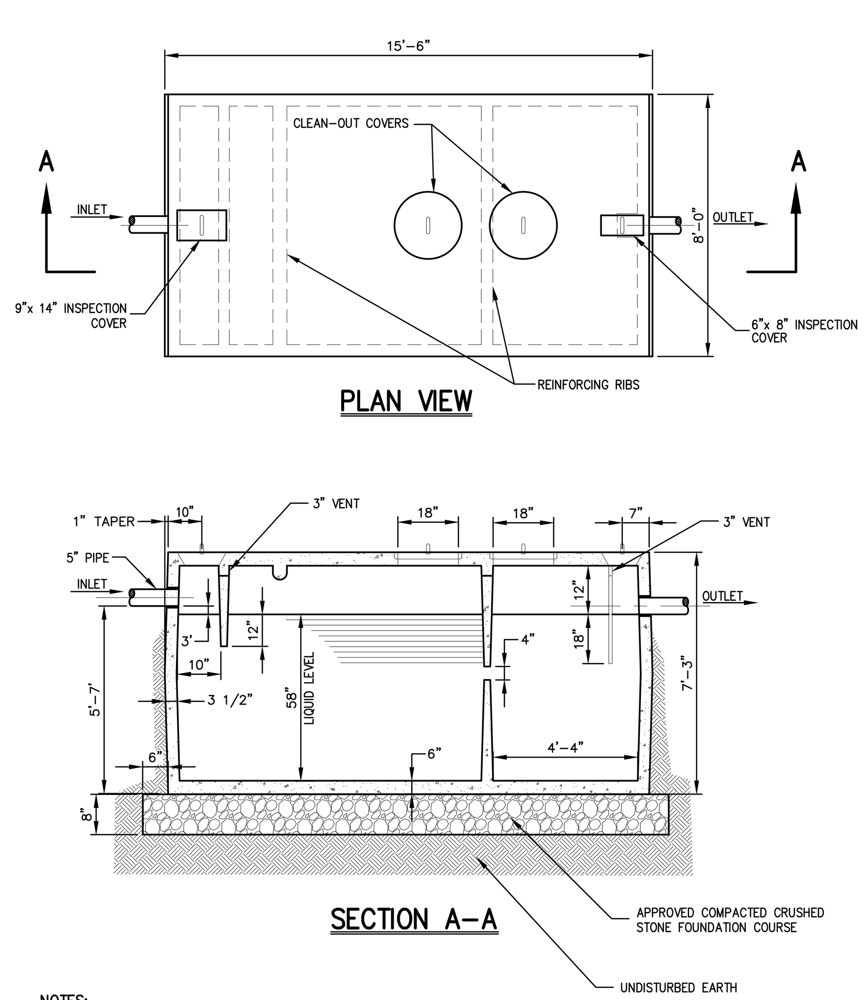

NOTES:

1. SEPTIC TANK SHALL BE WOODARD'S CONCRETE PRODUCTS, INC. PRODUCT 3,500 GALLON, OR APPROVED EQUAL.
2. CONCRETE MINIMUM STRENGTH: 4,000 PSI @ 28 DAYS.
3. TANK SHALL BE PLACED ON 3" BED OF SAND OR PEA GRAVEL.

2,000 GALLON SEPTIC TANK — 10

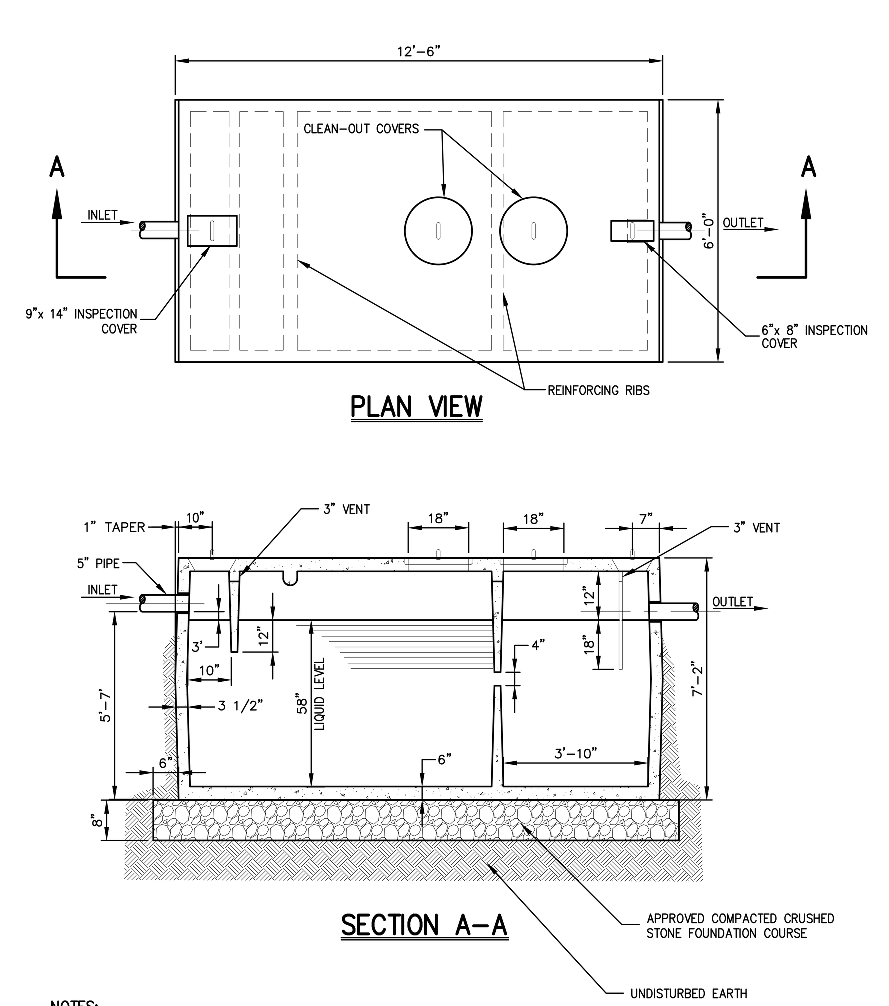

NOTES:

1. SEPTIC TANK SHALL BE WOODARD'S CONCRETE PRODUCTS, INC. PRODUCT 2,000 GALLON, OR APPROVED EQUAL.
2. CONCRETE MINIMUM STRENGTH: 4,000 PSI @ 28 DAYS.
3. TANK SHALL BE PLACED ON 3" BED OF SAND OR PEA GRAVEL.

UTILITY NOTES — X

NOTES PERTAINING TO MANHOLES

- B–1 PRECAST CONCRETE MANHOLES SHALL COMPLY WITH ASTM STANDARD C-478. MANHOLE JOINTS SHALL COMPLY WITH ASTM STANDARD C-443.
- B–2 FOR PRECAST CONCRETE MANHOLES FIVE (5) FEET OR LESS IN HEIGHT, TOP CONE SECTION SHALL BE REPLACED WITH PRECAST REINFORCED CONCRETE SLAB (6" MIN. THICKNESS) WITH OPENING OF SUFFICIENT SIZE TO ACCOMMODATE MANHOLE CASTING.
- B–3 FOR MANHOLES 10 FEET OR MORE IN DEPTH, MANHOLE DIAMETER SHALL BE FIVE (5) FEET.
- B–4 TERMINAL MANHOLE FLOORS SHALL BE SLOPED TOWARD OUTFALL PIPE.
- B–5 INVERT CHANNELS FOR PRECAST CONCRETE MANHOLES SHALL BE CONSTRUCTED OF CONCRETE.
- B–6 NOTES A-1, A-2, A-4, A-5, A-6 & A-7 UNDER "NOTES PERTAINING TO DRAIN INLETS" ABOVE SHALL APPLY TO MANHOLES.

NOTES PERTAINING TO PRECAST CONCRETE STRUCTURES FOR STORM DRAINS, SANITARY SEWERS AND WATER LINES

- C–1 ALL PRECAST CONCRETE STRUCTURES SHALL BE DESIGNED TO ACCOMMODATE AN H-20 DESIGN LOAD.
- C–2 STEPS SHALL BE LOCATED WITHIN STRUCTURE TO AVOID PLACEMENT OVER PIPES WHEN PRACTICABLE.

X

X

No.	Revision	Date	By

Previous Editions Obsolete

APPLICANT:

FARRELL BUILDING COMPANY
2317 MONTAUK HIGHWAY
BRIDGEHAMPTON, NY 11932

JMC Planning, Engineering, Landscape Architecture & Land Surveying, PLLC
JMC Site Development Consultants, LLC
John Meyer Consulting, Inc.
120 BEDFORD ROAD • ARMONK, NY 10504
voice 914.273.5225 • fax 914.273.2102
www.jmcpllc.com

CONSTRUCTION DETAILS (OWTS)

FARRELL INDUSTRIAL PARK
ROUTE 300
TOWN OF NEWBURGH, NY

ANY ALTERATION OF PLANS, SPECIFICATIONS, PLATS AND REPORTS BEARING THE SEAL OF A LICENSED PROFESSIONAL ENGINEER OR LICENSED LAND SURVEYOR IS A VIOLATION OF SECTION 7209 OF THE NEW YORK STATE EDUCATION LAW, EXCEPT AS PROVIDED FOR BY SECTION 7209, SUBSECTION 2.

Drawn: TC		Approved: DL/JS	
Scale: NOT TO SCALE			
Date: 12/03/2020			
Project No: 18156			
18156-DETAILS	C-905	-	
Drawing No: C–905			

COPYRIGHT © 2020 by JMC All Rights Reserved. No part of this document may be reproduced, stored in a retrieval system, or transmitted in any form or by any means, electronic, mechanical, photocopying, recording or otherwise, without the prior written permission of JMC PLANNING, ENGINEERING, LANDSCAPE ARCHITECTURE & LAND SURVEYING, PLLC | JMC SITE DEVELOPMENT CONSULTANTS, LLC | JOHN MEYER CONSULTING, INC. (JMC). Any modifications or alterations to this document without the written permission of JMC shall render them invalid and unusable.

NOT FOR CONSTRUCTION

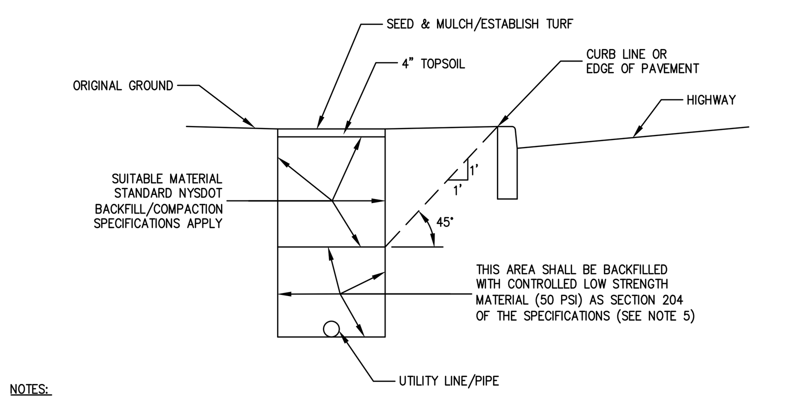

NOTES:

1. ALL MATERIALS SHALL BE PROVIDED AND WORK SHALL BE COMPETED IN ACCORDANCE WITH THE NEW YORK STATE DEPARTMENT OF TRANSPORTATION AND STANDARD SPECIFICATIONS AND ALL CURRENT ADDENDUM.
2. FOR LIGHTWEIGHT PIPE INSTALLATIONS, IT MAY BE NECESSARY TO COUNTERACT THE BUOYANCY OF THE PIPE DURING THE CLSM PLACEMENT. METHODS SUCH AS PARTIALLY FILLING WATERTIGHT PIPES WITH WATER, OR USING ANCHOR STRAPS OR GRAVEL BAGS TO HOLD DOWN THE PIPES CAN BE USED TO PREVENT FLOTATION.
3. DO NOT PLACE CLSM IN CONTACT WITH ALUMINUM PIPE OR CONNECTIONS UNLESS ALUMINUM IS COATED WITH AN APPROVED PRIMER.
4. DO NOT PLACE CLSM CONTAINING FLY ASH IN CONTACT WITH CAST IRON OR DUCTILE IRON PIPES OR FITTINGS.
5. THE CONTRACTOR MAY SURROUND THE PIPE OR UTILITY WITH SPECIAL MATERIAL SUBJECT TO APPROVAL OF THE ENGINEER.

NYSDOT RESTORATION DETAIL FOR UTILITY LINE EXCAVATION/TRENCH 1
(EXCAVATION OUTSIDE PAVED SURFACE)

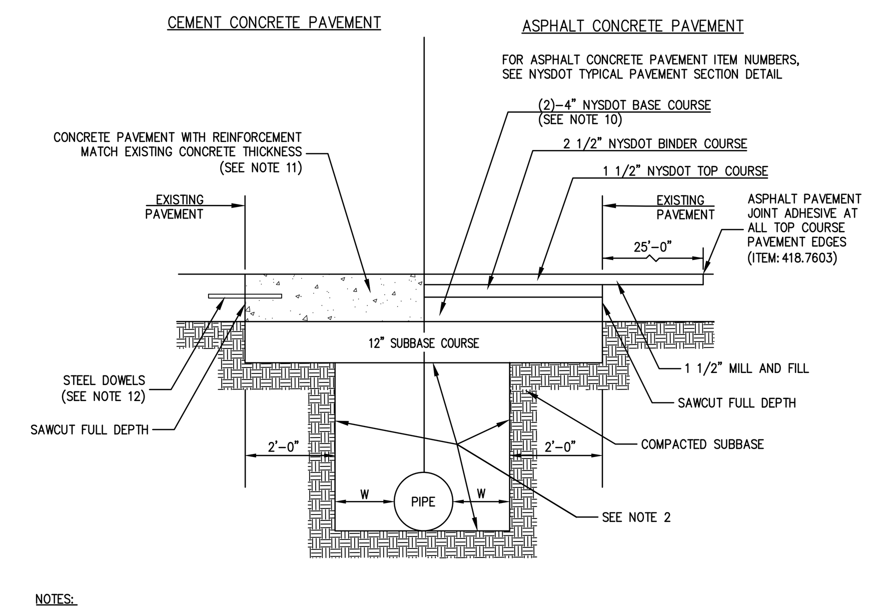

NOTES:

1. ALL MATERIALS SHALL BE PROVIDED AND WORK SHALL BE COMPETED IN ACCORDANCE WITH THE NEW YORK STATE DEPARTMENT OF TRANSPORTATION AND STANDARD SPECIFICATIONS AND ALL CURRENT ADDENDUM.
2. WHEN "W" IS LESS THAN 18", CONTROLLED LOW STRENGTH BACKFILL (CLSM) SHALL BE USED. WHEN "W" IS 18" OR GREATER, THE BACKFILL SHALL BE SELECT GRANULAR FILL. MATERIAL AND PLACEMENT SHALL BE IN ACCORDANCE WITH SECTION 200 OF THE STANDARD SPECIFICATIONS. COMPACTION TESTS WILL BE COMPLETED ON IN-PLACE SELECT GRANULAR FILL. THE CLSM HAS TO SET PRIOR TO BACKFILLING. THE CONTRACTOR MAY SURROUND THE PIPE OR UTILITY WITH SPECIAL MATERIAL SUBJECT TO APPROVAL OF THE ENGINEER.
3. FOR LIGHTWEIGHT PIPE INSTALLATIONS, IT MAY BE NECESSARY TO COUNTERACT THE BUOYANCY OF THE PIPE DURING THE CLSM PLACEMENT. METHODS SUCH AS PARTIALLY FILLING WATERTIGHT PIPES WITH WATER, OR USING ANCHOR STRAPS OR GRAVEL BAGS TO HOLD DOWN THE PIPES CAN BE USED TO PREVENT FLOTATION.
4. WHERE THE DISTANCE BETWEEN THE TOP OF PIPE ELEVATION AND THE TOP OF THE SUBGRADE ELEVATION IS LESS THAN 2', CLSM SHALL BE USED FOR BACKFILL MATERIAL TO TOP OF SUBGRADE ELEVATION.
5. WHERE UNSUITABLE MATERIAL IS ENCOUNTERED AT THE BOTTOM OF THE TRENCH, A LAYER OF SELECT GRANULAR FILL OR CLSM SHALL BE PLACED TO PROVIDE A STABLE BEDDING.
6. DO NOT PLACE CLSM IN CONTACT WITH ALUMINUM PIPE OR CONNECTIONS UNLESS ALUMINUM IS COATED WITH AN APPROVED PRIMER.
7. DO NOT PLACE CLSM CONTAINING FLY ASH IN CONTACT WITH CAST IRON OR DUCTILE IRON PIPES OR FITTINGS.
8. ALL PAVEMENT JOINTS SHALL BE SEALED.
9. ALL DISTURBED OR NEW PAVEMENT SHALL HAVE TEMPORARY PAVEMENT STRIPING INSTALLED WITHIN 24 HOURS, AND FINAL STRIPING BEFORE ACCEPTANCE OF WORK.
10. THE 8" ASPHALT PAVEMENT BASE COURSES SHALL BE PLACED IN LIFTS NO GREATER THAN 4". IF THE EXISTING PAVEMENT IS GREATER THAN 12" TOTAL THICKNESS, THE BASE COURSE THICKNESS SHALL BE INCREASED SO THE BOTTOM OF THE RESTORATION PAVEMENT MATCHES THE EXISTING PAVEMENT.
11. THE CEMENT CONCRETE PAVEMENT SHALL MEET THE REQUIREMENTS OF SECTION 502 OF THE SPECIFICATIONS. THE THICKNESS SHALL MATCH THE EXISTING CONCRETE PAVEMENT. THE STEEL REINFORCEMENT SHALL BE #4 BARS @ 12" CENTERS IN BOTH DIRECTIONS AND MEET REQUIREMENTS OF SECTION 556 OF THE SPECIFICATIONS. THE BARS SHALL HAVE 4" COVER AND BE PLACED NO LOWER THAN THE MIDPOINT OF THE SLAB.
12. DRILL AND GROUT #8 BARS INTO EXISTING CONCRETE SLAB 12" MINIMUM @ 18" ON CENTER. BARS SHALL BE A MINIMUM OF 24" LONG.
13. WHEN CEMENT CONCRETE PAVEMENT HAVING AN ASPHALT OVERLAY IS ENCOUNTERED, PAVEMENT REPLACEMENT OVER TRENCH SHALL FOLLOW THE REQUIREMENTS FOR ASPHALT CONCRETE PAVEMENT REPLACEMENT.

NYSDOT DETAIL OF PAVEMENT REPLACEMENT OVER TRENCH 2

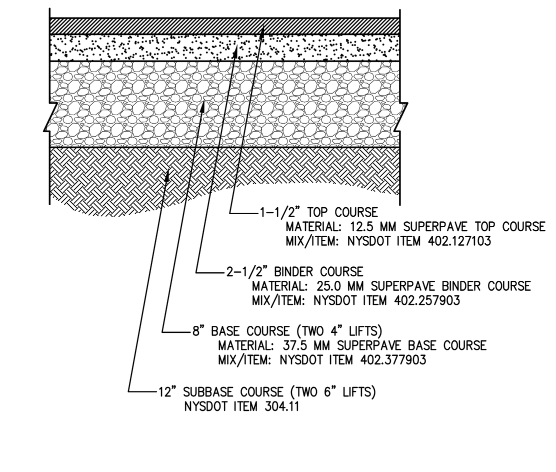

NOTES:

1. THICKNESSES INDICATED REFER TO COMPACTED MEASURE.
2. MATERIAL AND MIX/TIEM NUMBERS REFER TO:

   NEW YORK STATE
   DEPARTMENT OF TRANSPORTATION
   STANDARD SPECIFICATIONS
3. TACK COATS (ITEM 407.0103) SHALL BE INSTALLED BETWEEN ALL SUPERPAVE COURSES, BETWEEN EXISTING PAVEMENT COURSES & OVERLAYS AND BETWEEN NEW PAVEMENT & EXISTING PAVEMENT EDGES.
4. ASPHALT PAVEMENT JOINT ADHESIVE (ITEM 418.7603) SHALL BE INSTALLED AT ALL TOP COURSE PAVEMENT EDGES.

NYSDOT FULL DEPTH PAVEMENT SECTION 3

DEFINITION OF TERMS:

DRIVEWAY - EVERY ENTRANCE OR EXIT USED BY VEHICULAR TRAFFIC TO AND FROM LANDS OR BUILDINGS ABUTTING A HIGHWAY.

RESIDENTIAL DRIVEWAY - A DRIVEWAY SERVING FOUR OR FEWER PRIVATE HOMES OR AN APARTMENT BUILDING FOR FOUR OR FEWER FAMILY UNITS.

COMMERCIAL DRIVEWAY - A DRIVEWAY SERVING A COMMERCIAL ESTABLISHMENT, INDUSTRY, GOVERNMENTAL OR EDUCATIONAL INSTITUTION, PRIVATE UTILITY, HOSPITAL, CHURCH, APARTMENT BUILDING, OR OTHER COMPARABLE TRAFFIC GENERATOR.

MAJOR COMMERCIAL DRIVEWAY - ANY COMMERCIAL DRIVEWAY WHERE THE ACTUAL OR ANTICIPATED TRAFFIC VOLUME ON A TYPICAL DAY IS DEFINED BY THE DRIVEWAY POLICY AS DEFINED IN THE HIGHWAY DESIGN MANUAL (HDM) CHAPTER 5 APPENDIX 5A.

MINOR COMMERCIAL DRIVEWAY - ANY COMMERCIAL DRIVEWAY WHERE THE ACTUAL OR ANTICIPATED TRAFFIC VOLUMES ON A TYPICAL DAY ARE LESS THAN THE VALUES STIPULATED FOR A MAJOR COMMERCIAL DRIVEWAY.

FIELD ENTRANCE - A DRIVEWAY SERVING A FARMYARD, CULTIVATED OR UNCULTIVATED FIELD, TIMBERLAND, OR UNDEVELOPED LAND NOT USED FOR INDUSTRIAL, COMMERCIAL, OR RESIDENTIAL PURPOSES.

URBAN / RURAL - THE AREA CHARACTER BASED ON NYSDOT HIGHWAY DESIGN MANUAL CHAPTER 2, SECTION 2.4.

DRIVEWAY OFFSET - THE DISTANCE IN FEET MEASURED FROM THE INSIDE EDGE OF THE OUTERMOST TRAVEL LANE, OR TURNING LANE, TO THE HIGHWAY EDGE OF PAVEMENT. THE DISTANCE IS EQUAL TO THE WIDTH OF THE OUTERMOST LANE AND THE WIDTH OF THE PAVED SHOULDER, OR CURB OFFSET.

HIGHWAY EDGE OF PAVEMENT - THE OUTSIDE EDGE OF THE PAVED HIGHWAY SURFACE.

SHOULDER WIDTH - THE WIDTH IN FEET OF PAVED SHOULDER INCLUDING A PARKING LANE, BIKE LANE, CURB OFFSET, OR OTHER PAVED AREA OUTSIDE OF THE TRAVEL LANE.

MINIMUM PAVING LIMIT (MPL) - THE MINIMUM DISTANCE IN FEET MEASURED ALONG THE CENTERLINE OF A DRIVEWAY FROM THE OUTSIDE EDGE OF THE OUTERMOST TRAVEL LANE THAT A DRIVEWAY MUST BE PAVED (INCLUDES THE SHOULDER WIDTH).

PAVEMENT LENGTH (PL) - THE DISTANCE IN FEET MEASURED ALONG THE CENTERLINE OF A DRIVEWAY FROM THE HIGHWAY EDGE OF PAVEMENT TO THE END OF PROPOSED DRIVEWAY PAVEMENT.

TRANSITION LENGTH (TL) - THE DISTANCE IN FEET MEASURED ALONG THE CENTERLINE OF A DRIVEWAY BEYOND THE DRIVEWAY PAVEMENT LENGTH (PL) TO THE END OF PROPOSED DRIVEWAY WORK. THE TRANSITION LENGTH (TL) IS TYPICALLY USED FOR GRADING, LAYOUT, OR TRANSITION REASONS. THE TRANSITION LENGTH (TL) ONLY APPLIES TO DRIVEWAYS THAT ARE UNPAVED.

BUFFER ZONE - A PHYSICAL DISTANCE SEPARATING THE PEDESTRIAN ACCESS ROUTE AND THE VEHICLE TRAVELED WAY. THE BUFFER ZONE BUFFERS PEDESTRIANS FROM TRAFFIC AND PROVIDES SPACE FOR SNOW STORAGE, UTILITIES, PLANTS, AND OTHER STREET APPURTENANCES. THE BUFFER ZONE MAY BE PLANTED OR PAVED.

SHARED-USE-PATH (SUP) - A BICYCLE AND PEDESTRIAN FACILITY, TYPICALLY WITHIN THE RIGHT-OF-WAY, SEPARATED FROM MOTORIZED VEHICULAR TRAFFIC BY A BUFFER ZONE OR BARRIER. REFER TO HIGHWAY DESIGN MANUAL CHAPTER 17 AND AASHTO GUIDE FOR THE DEVELOPMENT OF BICYCLE FACILITIES FOR GUIDANCE ON BUFFER ZONE WIDTH AND SEPARATION OF SHARED USE PATHS FROM ROADWAYS.

SIDEWALK - A SMOOTH, STABLE AND SLIP RESISTANT EXTERIOR PATHWAY INTENDED FOR PEDESTRIAN USE ALONG A VEHICULAR WAY SEPARATED WITH A CURB OFFSET.

HMA - HOT MIX ASPHALT

PCC - PORTLAND CEMENT CONCRETE

DESIGN ELEMENT TOLERANCES		
ELEMENT	DESIGN AND FIELD LAYOUT LIMIT	LIMIT FOR WORK ACCEPTANCE
SIDEWALK CROSS SLOPE - SEE NOTE 12	1.5% MAX.	2.0% MAX.
SIDEWALK GRADE (RUNNING SLOPE) - SEE NOTE 11	4.5% MAX.	5.0% MAX.
CURB RAMP GRADE (RUNNING SLOPE) - SEE NOTE 21	7.5% MAX.	8.3% MAX.
BLENDED TRANSITION GRADE (RUNNING SLOPE) - SEE NOTE 7	4.5% MAX.	5.0% MAX.

NOTES REFERENCED IN THE TABLE ABOVE CAN BE FOUND ON STANDARD SHEET 608-01 SHEET 1 OF 9.

ALL VALUES SHOWN ON THE 608-03 STANDARD SHEETS REFER TO DESIGN AND FIELD LAYOUT LIMITS.

FOR ADDITIONAL REQUIREMENTS AND TOLERANCES, SEE "CRITICAL ELEMENTS FOR THE DESIGN, LAYOUT, AND CONSTRUCTION OF PEDESTRIAN FACILITIES" AVAILABLE ON THE NYSDOT HIGHWAY DESIGN MANUAL CHAPTER 18 WEBSITE.

GENERAL NOTES FOR DRIVEWAY STANDARD SHEETS:

1. THE DRIVEWAY STANDARD SHEETS APPLY TO FIELD ENTRANCES, RESIDENTIAL DRIVEWAYS AND MINOR COMMERCIAL DRIVEWAYS. FIELD ENTRANCES AND RESIDENTIAL DRIVEWAYS ACCOMMODATE AN AASHTO PASSENGER CAR DESIGN VEHICLE. MINOR COMMERCIAL DRIVEWAYS ACCOMMODATE AN AASHTO SINGLE UNIT TRUCK DESIGN VEHICLE.
2. DRIVEWAY WORK PERFORMED OFF THE RIGHT-OF-WAY REQUIRES AN EASEMENT OR A DRIVEWAY RELEASE. A DRIVEWAY RELOCATION WILL REQUIRE A TEMPORARY EASEMENT MAP.
3. IF COMMERCIAL PROPERTY DEVELOPMENT PLANS INVOLVE NEW OR MODIFIED ACCESS TO A STATE HIGHWAY A COMMERCIAL HIGHWAY WORK PERMIT APPLICATION (FORM PERM 33-COM) MUST BE FILLED OUT AND SUBMITTED TO THE REGIONAL PERMIT COORDINATOR.
4. SEE THE DRIVEWAY TABLE IN THE CONTRACT PLANS FOR SPECIFIC DRIVEWAY LOCATIONS, WIDTHS ("W"), CORNER ANGLES, LENGTHS ("L"), MATERIAL, AND ENTRANCE TYPE.
5. DETECTABLE WARNING SURFACES SHALL BE PROVIDED WHERE THE PEDESTRIAN ACCESS ROUTE CROSSES DRIVEWAYS WITH SIGNAL, YIELD OR STOP CONTROL. DETECTABLE WARNING SURFACES SHALL NOT BE PROVIDED AT CROSSINGS OF UNCONTROLLED DRIVEWAY APRONS.
6. THE TAPER METHOD IS GENERALLY NOT RECOMMENDED FOR DRIVEWAYS WITH A DRIVEWAY OFFSET LESS THAN 16 FEET, UNLESS IT CAN BE FIELD VERIFIED THAT THE DRIVEWAY ENTRANCE WIDTH WILL ACCOMMODATE THE VEHICLES THAT USE THE DRIVEWAY ON A REGULAR BASIS.
7. TYPE 3 AND TYPE 4 DRIVEWAY ENTRANCES CAN BE USED WITHOUT CURB IF A TAPER STYLE ENTRANCE BETTER MATCHES THE HIGHWAY CORRIDOR AESTHETICS OR SPECIFIC SITE CONDITIONS THAN A RADIUS STYLE ENTRANCE.
8. UP TO 10" OF HMA MAY BE REQUIRED FOR HEAVY TRUCKS PER CONTRACT DOCUMENTS.
9. UP TO 9" OF PCC MAY BE REQUIRED FOR HEAVY TRUCKS PER CONTRACT DOCUMENTS.
10. UP TO 12" OF SUBBASE MAY BE REQUIRED FOR HEAVY TRUCKS PER CONTRACT DOCUMENTS.
11. THE DETAILS SHOW THE PAVEMENT LENGTH ("PL") EXTENDING TO THE MINIMUM PAVING LIMIT ("MPL"). HOWEVER, THE "PL" CAN EXTEND BEYOND THE "MPL" AS SPECIFIED IN THE CONTRACT DOCUMENTS.
12. A DRIVEWAY TIP-UP SECTION SHOULD EXTEND TO A LOGICAL TERMINI (EXAMPLE: SIDEWALK EDGE, WHERE THE DRIVEWAY GRADE MATCHES EXISTING GROUND, OR LAYOUT POINT). FOR REFERENCE, A REASONABLE LENGTH FOR TAPERING THE TIP-UP SECTION BACK TO THE EDGE OF DRIVEWAY IS 3 TO 4 TIMES THE LENGTH OF CURB DROP. THE TIP-UP SECTION IS NOT PART OF THE DRIVEWAY OPENING WIDTH. REFER TO NYSDOT STANDARD SHEET 609-02 "MISCELLANEOUS CURB DETAILS" FOR THE CURB TRANSITION.
13. TO DETERMINE THE LIMITS OF SHOULDER RECONSTRUCTION, REFER TO THE DRIVEWAY OPENING TABLES ON SHEET 4 FOR NO SHOULDER (0' OFFSET).
14. FOR PCC SHOULDERS, SEE STANDARD SHEET 502-02 FOR LONGITUDINAL JOINT TIE DETAILS.
15. DIMENSIONS AND ANGLES MAY BE INTERPOLATED FOR VALUES OTHER THAN THOSE SHOWN IN THE TABLES.
16. THE SHOULDER PAVEMENT THICKNESSES SHOWN ARE DEFAULT VALUES UNLESS OTHERWISE SHOWN IN THE PLANS. MATERIALS SHALL BE AS SPECIFIED IN THE CONTRACT DOCUMENTS.

WIDTH / LENGTH:

17. WHERE THERE ARE CONSTRAINTS THAT PREVENT THE CONSTRUCTION OF THE DRIVEWAY OPENING USING EITHER OF THE LAYOUT METHODS, THE ENGINEER MAY SPECIFY A SMALL CORNER CURB RADIUS OF 2' (OR A "1/2 BULL NOSE" CURB ALONG LOW SPEED HIGHWAYS), PROVIDED THE DRIVEWAY OPENING MEETS THE REQUIREMENTS OF THE "DRIVEWAY OPENING" TABLES ON SHEET 4.
18. FOR RESIDENTIAL DRIVEWAYS, THE MINIMUM PAVING LIMIT SHALL BE 10' FROM THE OUTSIDE EDGE OF TRAVEL LANE OR 2' BEHIND ANY SIDEWALK, IF PRESENT, WHICHEVER IS GREATER. FOR MINOR COMMERCIAL DRIVEWAYS, THE MINIMUM PAVING LIMIT SHALL BE 30' FROM THE OUTSIDE EDGE OF TRAVEL LANE, OR 2' BEHIND ANY SIDEWALK, IF PRESENT, OR EXTEND TO THE RIGHT-OF-WAY LINE, WHICHEVER IS GREATER. THE PAVING LIMIT MAY EXTEND BEYOND THE MINIMUM PAVING LIMIT FOR NEW DRIVEWAYS AND TO TRANSITION TO EXISTING PAVED DRIVEWAYS. THE PAVING LIMIT WILL BE NOTED IN THE DRIVEWAY TABLE OF THE CONTRACT PLANS.
19. FOR GRADING AND CONSTRUCTION REQUIREMENTS OF TRANSITIONS FROM PLACED HMA TO EXISTING HMA DRIVEWAYS, REFER TO DETAIL 9 - "TIE-IN TO EXISTING DRIVEWAYS" ON SHEET 9, AND TABLE 3 - "DRIVEWAY MATERIALS AND THICKNESS" ON SHEET 2.
20. FOR PCC DRIVEWAYS, REFER TO THE 502 SERIES STANDARD SHEETS FOR METAL REINFORCEMENT, JOINT TIES, SAWING AND SEALING, ETC.
21. A 5' MINIMUM BUFFER ZONE SHALL BE USED UNLESS OTHERWISE SPECIFIED IN THE CONTRACT DOCUMENTS.

SITE CONDITIONS (SIDEWALK / CURB):

22. ANY PCC SIDEWALK WHICH CROSSES A DRIVEWAY SHALL HAVE A MINIMUM THICKNESS OF 6" AND INCLUDE STEEL MESH REINFORCEMENT WITH 3" OF TOP COVER.
23. FOR GRADE CHANGES REFER TO THE DRIVEWAY PROFILES ON SHEET 8. VERTICAL CURVES ARE RECOMMENDED TO CONNECT TANGENTS. SEE TABLE 5 - 'MINIMUM LENGTH OF VERTICAL CURVE' ON SHEET 2 FOR TYPICAL VERTICAL CURVE LENGTHS "L".
24. WHERE THE EXISTING GRADE OF THE DRIVEWAY PROFILE IS LESS THAN OR EQUAL TO 2%, MATCH THE CROSS SLOPE OF THE SIDEWALK TO THE EXISTING DRIVEWAY PROFILE GRADE.
25. WHERE THE EXISTING GRADE OF THE DRIVEWAY PROFILE EXCEEDS 2% SAWCUT THE DRIVEWAY AND RECONSTRUCT A MINIMUM OF 2' ON BOTH SIDES OF THE SIDEWALK, TO TRANSITION FROM THE EXISTING GRADE OF THE DRIVEWAY PROFILE TO THE SIDEWALK CROSS SLOPE.
26. TO PREVENT DRIVEWAY GRADES FROM EXCEEDING THE VALUES IN TABLE 2 - 'MAXIMUM DRIVEWAY SLOPE' ON SHEET 2, IT MAY BE NECESSARY TO DEPRESS THE SIDEWALK ACROSS THE DRIVEWAY. SIDEWALK RAMPS SHALL HAVE THE LEAST RUNNING SLOPE POSSIBLE, WITH A MAXIMUM DESIGN AND LAYOUT SLOPE OF 7.5%. THE RUNNING SLOPE FOR WORK ACCEPTANCE SHALL BE A MAXIMUM OF 8.3%. WHERE EXISTING CONDITIONS DO NOT ALLOW THE CONSTRUCTION OF A SIDEWALK RAMP AT 8.3% OR LESS RUNNING SLOPE, THE RAMP LENGTH SHALL NOT BE REQUIRED TO EXCEED 15'-1" FOR DESIGN AND LAYOUT. THE RAMP LENGTH SHALL NOT BE REQUIRED TO EXCEED 15'-0" FOR WORK ACCEPTANCE.
27. WHERE DRAINAGE IS CARRIED ALONG THE CURB, CONSTRUCT THE DRIVEWAY WITH A SHORT UPGRADE TO PREVENT RUNOFF FROM PONDING AT THE DRIVEWAY ENTRANCE (FLAT DRIVEWAY) OR RUNNING DOWN THE DRIVEWAY (DOWNHILL DRIVEWAY SLOPE). IF CONDITIONS MAKE THE ADDITION OF A SHORT UPGRADE IMPRACTICAL, USE 1" CURB REVEAL AND CONTINUE CURB ACROSS THE DRIVEWAY OPENING. TYPICALLY, CURB REVEAL WILL NOT BE CONSTRUCTED IN RURAL AREAS. IF CURB REVEAL IS SPECIFIED FOR A SPECIFIC DRIVEWAY, IT WILL BE NOTED IN THE DRIVEWAY TABLE OF THE CONTRACT PLANS IN THE 'COMMENTS' COLUMN.

ENTRANCE TYPE:

28. THE ENGINEER MAY INTERCHANGE TYPE 1, TYPE 3 AND TYPE 4 RESIDENTIAL DRIVEWAYS TO BETTER MATCH THE EXISTING ENTRANCE TYPES ALONG THE HIGHWAY CORRIDOR WHILE CONSIDERING AVAILABLE SPACE, CONSTRUCTABILITY, SAFETY, AND FUNCTIONALITY. THE DRIVEWAY TYPE SHALL COMPLY WITH TABLE 4 - 'DRIVEWAY ENTRANCE TYPE SELECTION' ON SHEET 2.
29. FOR DRIVEWAYS WITH VARYING WIDTHS AND/OR CURVED ALIGNMENTS, DETERMINE THE DRIVEWAY WIDTH AND CORNER ANGLE 20'-0" FROM THE EDGE OF TRAVEL LANE.
30. FOR A ONE-WAY DRIVEWAY ENTRANCE OR EXIT, THE DRIVEWAY ENTRANCE WIDENING IS ONLY NECESSARY ON ONE SIDE OF THE DRIVEWAY TO ACCOMMODATE THE SHARPER TURNING MOVEMENT. ONE-WAY DRIVEWAYS WILL BE IDENTIFIED ON THE DRIVEWAY TABLE OF THE CONTRACT PLANS UNDER 'COMMENTS'. FOR CURBED HIGHWAYS, A SMALL CORNER CURB RADIUS OF 2' (OR '1/2 BULLNOSE' CURB ALONG LOW SPEED HIGHWAYS) SHALL BE CONSTRUCTED TO ELIMINATE A SHARP CORNER BEND IN THE CURB LINE (WHICH IS SAFER FOR SNOWPLOW OPERATIONS).

MATERIAL:

31. FOR DRIVEWAY MATERIAL REQUIREMENTS, USE TABLE 3 - 'DRIVEWAY MATERIALS AND THICKNESS' ON SHEET 2.
32. FOR FIELD ENTRANCES, THE MATERIAL WITHIN THE PAVEMENT LENGTH ("PL") CAN CONSIST OF GRAVEL OR STONE AND BE CONNECTED TO THE EDGE OF THE HIGHWAY SHOULDER WITHOUT REMOVING ANY OF THE EXISTING SHOULDER MATERIAL.

NEW YORK STATE OF OPPORTUNITY. | Department of Transportation
U.S. CUSTOMARY STANDARD SHEET
RESIDENTIAL AND MINOR COMMERCIAL DRIVEWAYS (SHEET 1 OF 9)
APPROVED MARCH 07, 2016 | ISSUED UNDER EB 16-012
/S/ RICHARD W. LEE, P.E. DEPUTY CHIEF ENGINEER (DESIGN) | 608-03

NYSDOT RESIDENTIAL AND MINOR COMMERCIAL DRIVEWAYS 4

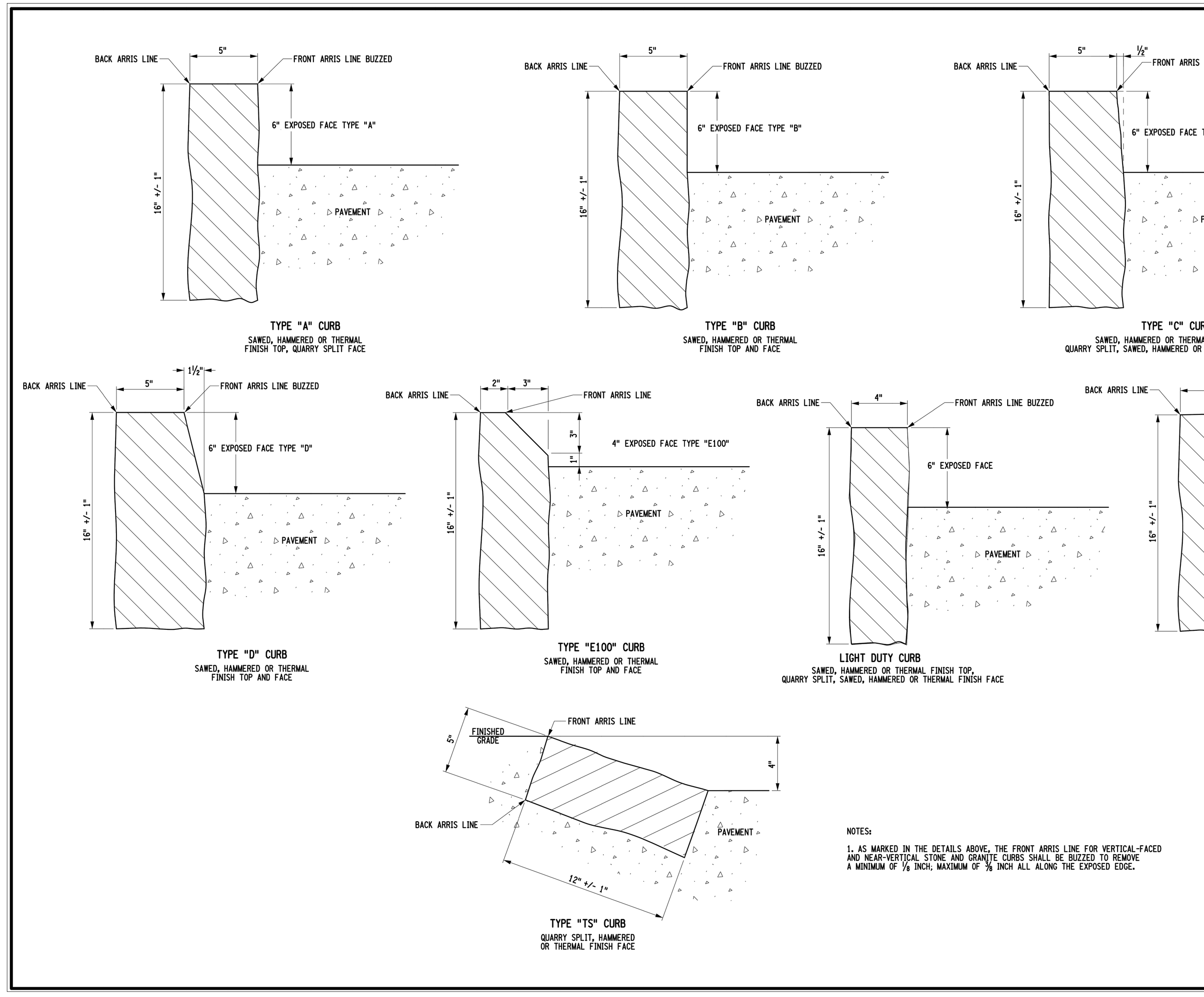

NOTES:

1. AS MARKED IN THE DETAILS ABOVE, THE FRONT ARRIS LINE FOR VERTICAL-FACED AND NEAR-VERTICAL STONE AND GRANITE CURBS SHALL BE BUZZED TO REMOVE A MINIMUM OF 1/8 INCH; MAXIMUM OF 3/8 INCH ALL ALONG THE EXPOSED EDGE.

NEW YORK STATE OF OPPORTUNITY. | Department of Transportation
U.S. CUSTOMARY STANDARD SHEET
STONE CURB AND GRANITE CURB
APPROVED: MAY 12, 2016 | ISSUED UNDER EB 16-019
/S/ RICHARD W. LEE, P.E. DEPUTY CHIEF ENGINEER (DESIGN) | 609-01

NYSDOT STONE CURB AND GRANITE CURB 5
(ON SITE)

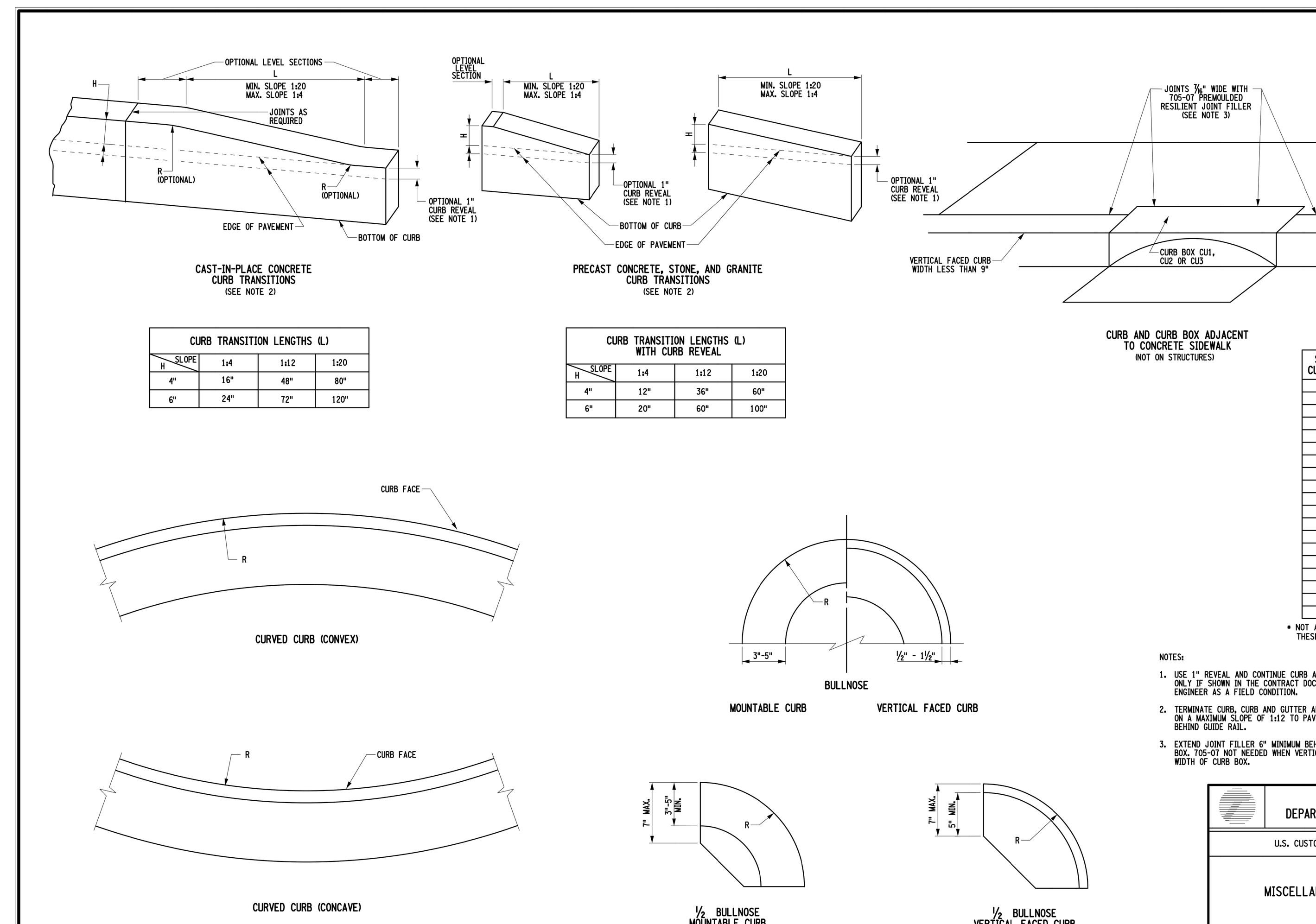

CURB TRANSITION LENGTHS (L)			
H \ SLOPE	1:4	1:12	1:20
4"	16"	48"	80"
6"	24"	72"	120"

CURB TRANSITION LENGTHS (L) WITH CURB REVEAL			
H \ SLOPE	1:4	1:12	1:20
4"	12"	36"	60"
6"	20"	60"	100"

STANDARD PRECAST CURB RADII IN INCHES
12" BULLNOSE *
18" BULLNOSE *
24" HALF BULLNOSE *
30" HALF BULLNOSE
60"
72" *
120"
180"
240"
300"
360"
420" *
480"
540" *
600"
720"
840"
960"
1080"

* NOT ALL PRECASTERS MANUFACTURE THESE RADII

NOTES:

1. USE 1" REVEAL AND CONTINUE CURB ACROSS DRIVEWAY ENTRANCES ONLY IF SHOWN IN THE CONTRACT DOCUMENTS, OR DIRECTED BY THE ENGINEER AS A FIELD CONDITION.
2. TERMINATE CURB, CURB AND GUTTER AND ASPHALT CURB BY TRANSITIONING ON A MAXIMUM SLOPE OF 1:12 TO PAVEMENT SURFACE, EXCEPT WHEN BEHIND GUIDE RAIL.
3. EXTEND JOINT FILLER 6" MINIMUM BEHIND CURB ON BOTH SIDES OF CURB BOX. 705-07 NOT NEEDED WHEN VERTICAL FACED CURB WIDTH EQUAL TO WIDTH OF CURB BOX.

STATE OF NEW YORK DEPARTMENT OF TRANSPORTATION
U.S. CUSTOMARY STANDARD SHEET
MISCELLANEOUS CURB DETAILS
APPROVED: JUNE 14, 2013 | ISSUED UNDER EB 13-007
/S/ RICHARD W. LEE, P.E. ACTING DEPUTY CHIEF ENGINEER (DESIGN) | 609-02
EFFECTIVE DATE: 01/09/14

NYSDOT MISCELLANEOUS CURB DETAILS 6

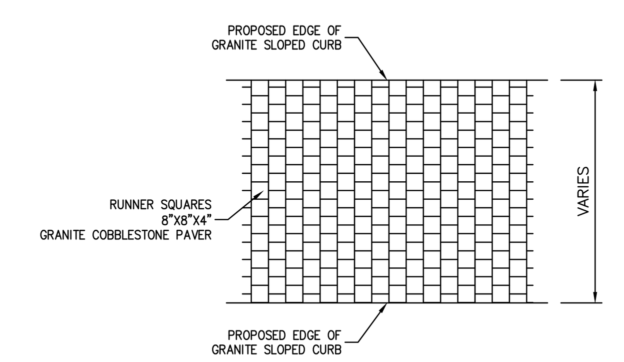

PLAN VIEW

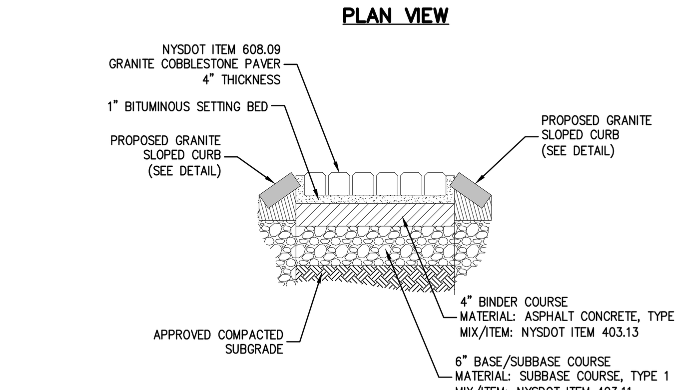

CROSS SECTION

PAVER NOTES:

1. SAMPLES OF THE PAVERS SHALL BE SUBMITTED TO THE CITY ENGINEER FOR COLOR APPROVAL.
2. WHEN PAVING BLOCKS ARE BEING INSTALLED, AN EVEN MIX OF PAVERS ARE TO BE TAKEN FROM THREE DIFFERENT PALLETS.
3. WHERE REQUIRED, CUT PAVING BLOCKS WITH WET OR DIAMOND BLADE SAW, NEATLY AND WITHOUT DAMAGED EDGES.
4. PAVERS SHALL BE SET AS SHOWN IN PLANS AND DETAILS.
5. COMPACT SOIL SUBGRADE AND SUBBASE MATERIAL AS APPROVED BY CITY ENGINEER.
6. GRANITE COBBLESTONE PAVERS SHALL BE FROM A SINGLE SOURCE.

GENERAL NOTES:

1. THICKNESSES INDICATED REFER TO COMPACTED MEASURE.
2. MATERIAL AND MIX/ITEM NUMBERS REFER TO:
   NEW YORK STATE
   DEPARTMENT OF TRANSPORTATION
   STANDARD SPECIFICATIONS

GRANITE COBBLESTONE PAVER ISLAND 7
(ON SITE)

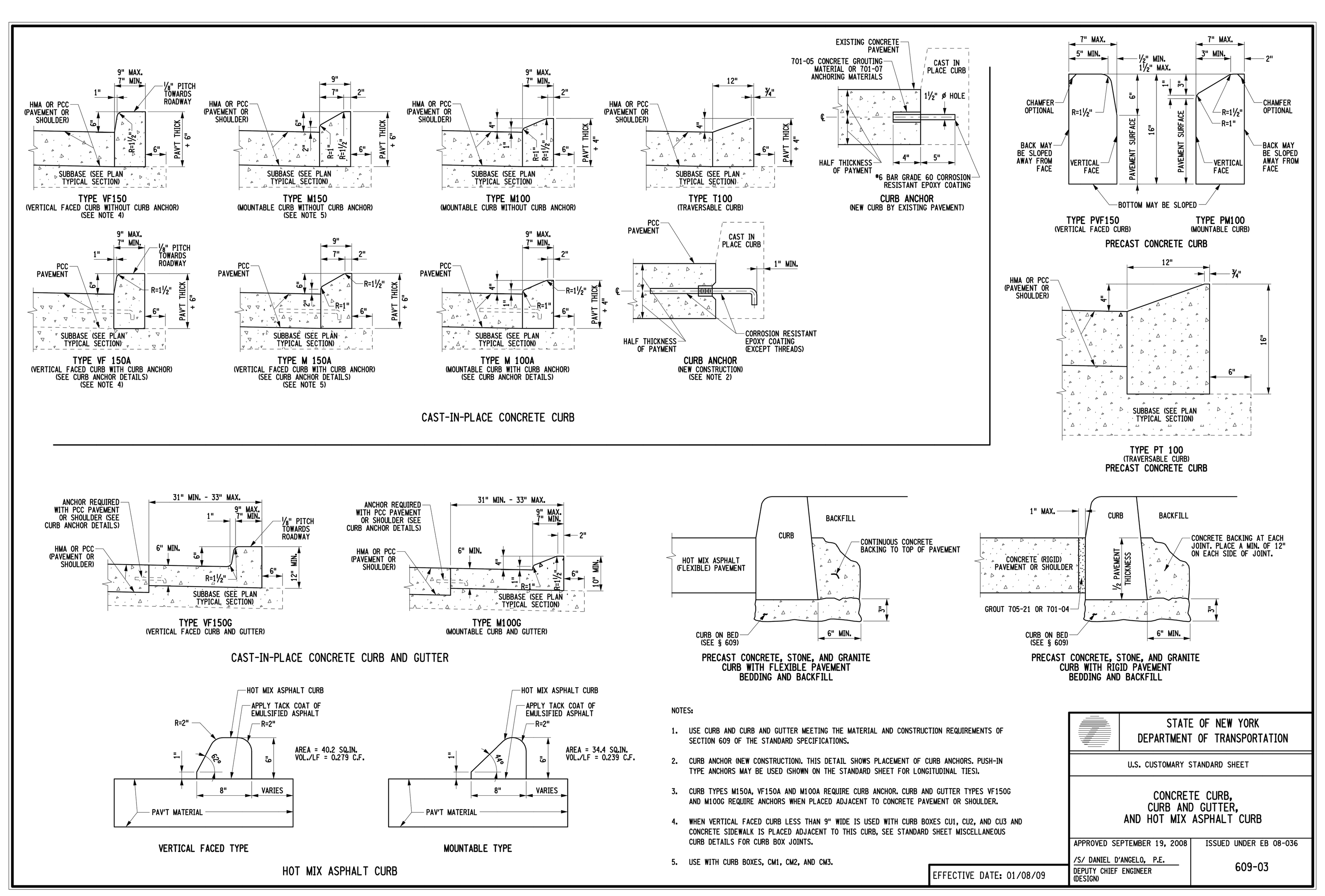

NOTES:

1. USE CURB AND CURB AND GUTTER MEETING THE MATERIAL AND CONSTRUCTION REQUIREMENTS OF SECTION 609 OF THE STANDARD SPECIFICATIONS.
2. CURB ANCHOR (NEW CONSTRUCTION). THIS DETAIL SHOWS PLACEMENT OF CURB ANCHORS. PUSH-IN TYPE ANCHORS MAY BE USED (SHOWN ON THE STANDARD SHEET FOR LONGITUDINAL TIES).
3. CURB TYPES M150A, VF150A AND M100A REQUIRE CURB ANCHOR. CURB AND GUTTER TYPES VF150G AND M100G REQUIRE ANCHORS WHEN PLACED ADJACENT TO CONCRETE PAVEMENT OR SHOULDER.
4. WHEN VERTICAL FACED CURB LESS THAN 9" WIDE IS USED WITH CURB BOXES CU1, CU2, AND CU3 AND CONCRETE SIDEWALK IS PLACED ADJACENT TO THIS CURB, SEE STANDARD SHEET MISCELLANEOUS CURB DETAILS FOR CURB BOX JOINTS.
5. USE WITH CURB BOXES, CM1, CM2, AND CM3.

STATE OF NEW YORK DEPARTMENT OF TRANSPORTATION
U.S. CUSTOMARY STANDARD SHEET
CONCRETE CURB, CURB AND GUTTER, AND HOT MIX ASPHALT CURB
APPROVED SEPTEMBER 19, 2008 | ISSUED UNDER EB 08-036
/S/ DANIEL D'ANGELO, P.E. DEPUTY CHIEF ENGINEER (DESIGN) | 609-03
EFFECTIVE DATE: 01/08/09

NYSDOT CONCRETE CURB, CURB AND GUTTER, AND HOT MIX ASPHALT CURB 8

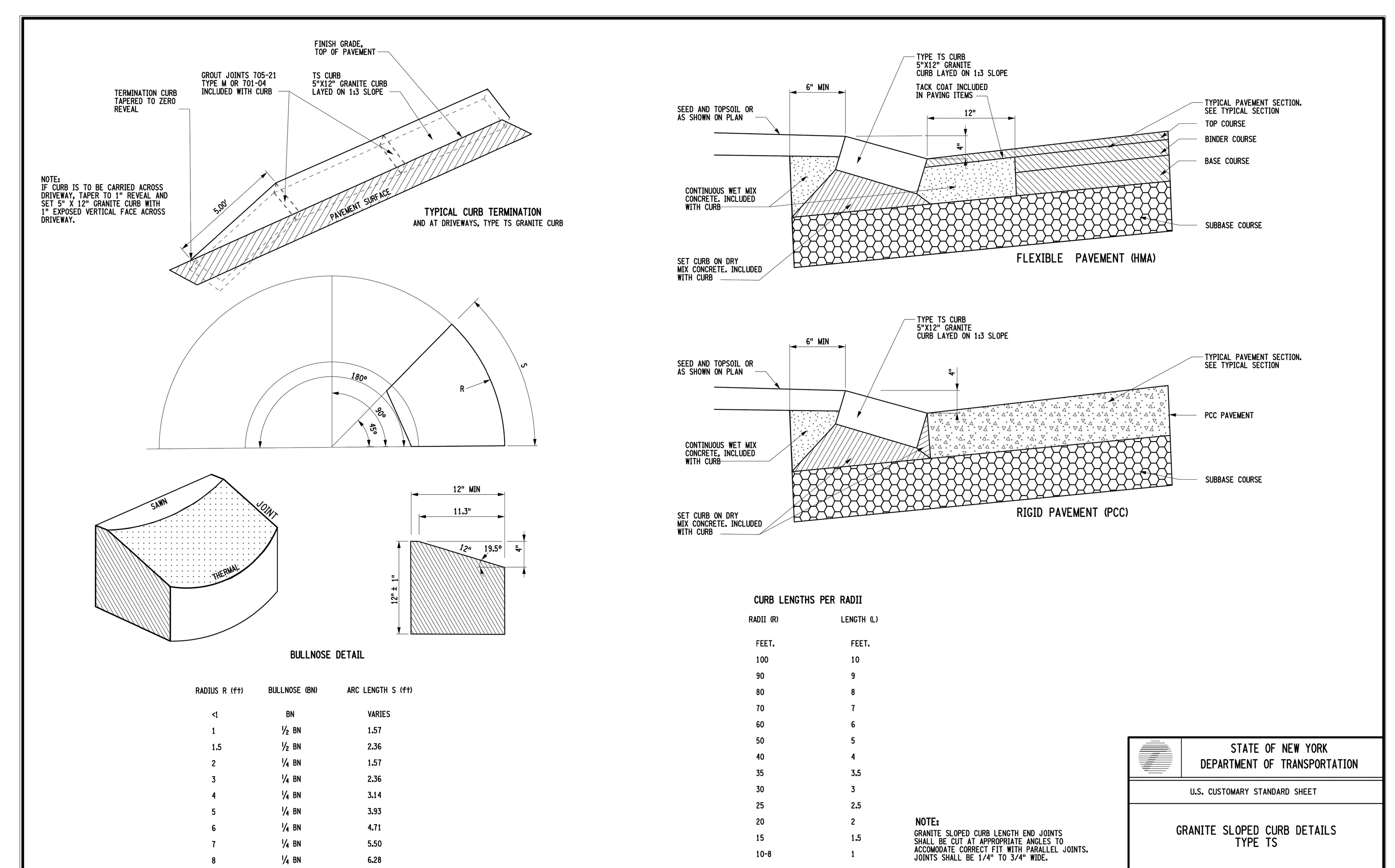

RADIUS R (ft)	BULLNOSE (BN)	ARC LENGTH S (ft)
<1	BN	VARIES
1	1/2 BN	1.57
1.5	1/2 BN	2.36
2	1/4 BN	1.57
3	1/4 BN	2.36
4	1/4 BN	3.14
5	1/4 BN	3.93
6	1/4 BN	4.71
7	1/4 BN	5.50
8	1/4 BN	6.28

CURB LENGTHS PER RADII

RADII (R) FEET.	LENGTH (L) FEET.
100	10
90	9
80	8
70	7
60	6
50	5
40	4
35	3.5
30	3
25	2.5
20	2
15	1.5
10-8	1

NOTE: GRANITE SLOPED CURB LENGTH END JOINTS SHALL BE CUT AT APPROPRIATE ANGLES TO ACCOMODATE CORRECT FIT WITH PARALLEL JOINTS. JOINTS SHALL BE 1/4" TO 3/4" WIDE.

STATE OF NEW YORK DEPARTMENT OF TRANSPORTATION
U.S. CUSTOMARY STANDARD SHEET
GRANITE SLOPED CURB DETAILS TYPE TS
APPROVED: JUNE 14, 2013 | ISSUED UNDER EB 13-007
/S/ RICHARD W. LEE, P.E. ACTING DEPUTY CHIEF ENGINEER (DESIGN) | 609-04
EFFECTIVE DATE: 01/09/14

NYSDOT GRANITE SLOPED CURB DETAILS TYPE TS 9
(ON SITE)

X

No.	Revision	Date	By

Previous Editions Obsolete

APPLICANT: FARRELL BUILDING COMPANY
2317 MONTAUK HIGHWAY
BRIDGEHAMPTON, NY 11932

JMC Planning, Engineering, Landscape Architecture & Land Surveying, PLLC
JMC Site Development Consultants, LLC
John Meyer Consulting, Inc.
120 BEDFORD ROAD • ARMONK, NY 10504
voice 914.273.5225 • fax 914.273.2102
www.jmcpllc.com

CONSTRUCTION DETAILS (SITE ENTRANCE)
FARRELL INDUSTRIAL PARK
ROUTE 300
TOWN OF NEWBURGH, NY

ANY ALTERATION OF PLANS, SPECIFICATIONS, PLATS AND REPORTS BEARING THE SEAL OF A LICENSED PROFESSIONAL ENGINEER OR LICENSED LAND SURVEYOR IS A VIOLATION OF SECTION 7209 OF THE NEW YORK STATE EDUCATION LAW, EXCEPT AS PROVIDED FOR BY SECTION 7209, SUBSECTION 2.

Drawn:	TC Approved: DL/JS
Scale:	NOT TO SCALE
Date:	12/03/2020
Project No:	18156
18156-DETAILS	C-906 –
Drawing No:	C-906

COPYRIGHT © 2020 by JMC All Rights Reserved. No part of this document may be reproduced, stored in a retrieval system, or transmitted in any form or by any means, electronic, mechanical, photocopying, recording or otherwise, without the prior written permission of JMC PLANNING, ENGINEERING, LANDSCAPE ARCHITECTURE & LAND SURVEYING, PLLC | JMC SITE DEVELOPMENT CONSULTANTS, LLC | JOHN MEYER CONSULTING, INC. (JMC). Any modifications or alterations to this document without the written permission of JMC shall render them invalid and unusable.
NOT FOR CONSTRUCTION

10 — NYSDOT WORK ZONE TRAFFIC CONTROL LEGENDS AND NOTES

TABLE NY1-A
BARRIER VEHICLE USE REQUIREMENTS
(LONG TERM, INTERMEDIATE TERM, AND SHORT TERM STATIONARY CLOSURES)

CLOSURE TYPE	EXPOSURE CONDITION [1]	USE REQUIREMENTS [4,5] FREEWAY	NON-FREEWAY (PRECONSTRUCTION POSTED SPEED LIMIT) ≥ 45 MPH	35-40 MPH	≤ 30 MPH
LANE CLOSURE	WORKERS ON FOOT OR IN VEHICLES EXPOSED TO TRAFFIC	REQUIRED[3]	REQUIRED[3]	REQUIRED[3]	OPTIONAL[2]
	NON-TRAVERSABLE HAZARD (IE. EQUIPMENT, MATERIALS, EXCAVATION) ONLY NO WORKERS EXPOSED	REQUIRED[3]	REQUIRED[3]	OPTIONAL[2]	OPTIONAL[2]
SHOULDER CLOSURE	WORKERS ON FOOT OR IN VEHICLES EXPOSED TO TRAFFIC	REQUIRED[3]	REQUIRED[3]	OPTIONAL[2]	OPTIONAL[2]
	NON-TRAVERSABLE HAZARD (IE. EQUIPMENT, MATERIALS, EXCAVATION) ONLY NO WORKERS EXPOSED	REQUIRED[3]	OPTIONAL[2]	OPTIONAL[2]	OPTIONAL[2]

1. THE EXPOSURE CONDITIONS DESCRIBED IN TABLE NY1-A ASSUMES THERE IS NO POSITIVE PROTECTION (TEMPORARY TRAFFIC BARRIER) PRESENT. WHERE WORKERS OR HAZARDS ARE PROTECTED BY A TEMPORARY TRAFFIC BARRIER, BARRIER VEHICLES ARE NOT REQUIRED.
2. WHERE THE REQUIREMENT IS "OPTIONAL", EITHER A BARRIER VEHICLE OR THE STANDARD LONGITUDINAL BUFFER SPACE (TABLE 6C-2) SHALL BE PROVIDED.
3. REQUIREMENTS SHALL INCLUDE PROVIDING A SEPARATE BARRIER VEHICLE FOR EACH CLOSED LANE AND EACH CLOSED PAVED SHOULDER 8' OR GREATER IN WIDTH. IF THE WORK SPACE MOVES WITHIN THE STATIONARY CLOSURE, THE BARRIER VEHICLE SHALL BE REPOSITIONED ACCORDINGLY. BARRIER VEHICLES PROTECTING NON-TRANSVERSABLE HAZARDS SHALL REMAIN IN PLACE DURING BOTH WORKING AND NON-WORKING HOURS UNTIL THE HAZARD NO LONGER EXISTS. EXCEPTIONS TO THESE REQUIREMENTS MAY BE MADE, AS APPROVED BY THE REGIONAL DIRECTOR OR HIS/HER DESIGNEE WHERE BARRIER VEHICLE PLACEMENT WOULD BE INEFFECTIVE OR WOULD INTERFERE WITH THE SAFE OPERATION OF TRAFFIC.
4. BARRIER VEHICLES ARE NOT REQUIRED FOR MILLING AND/OR PAVING OPERATIONS, BUT THE STANDARD LONGITUDINAL BUFFER SPACE (TABLE 6C-2) SHALL BE PROVIDED.
5. BARRIER VEHICLES ARE NOT REQUIRED FOR FLAGGING OPERATIONS, BUT THE STANDARD LONGITUDINAL BUFFER SPACE (TABLE6C-2) SHALL BE PROVIDED.

TABLE NY1-B
SHADOW VEHICLE USE REQUIREMENTS
(MOBILE CLOSURES)

CLOSURE TYPE	EXPOSURE CONDITION	USE REQUIREMENTS FREEWAY	NON-FREEWAY (PRECONSTRUCTION POSTED SPEED LIMIT) ≥ 45 MPH	35-40 MPH	≤ 30 MPH
LANE CLOSURE	WHEN ANY WORKER, VEHICLE, OR OTHER HAZARD IS EXPOSED TO TRAFFIC	REQUIRED[2,4]	REQUIRED[2,4]	REQUIRED[2,4]	REQUIRED[2,4]
SHOULDER CLOSURE	WHEN ANY WORKER, VEHICLE, OR OTHER HAZARD IS EXPOSED TO TRAFFIC	REQUIRED[2,4]	REQUIRED[2,4]	REQUIRED[2,4]	REQUIRED[2,4]

1. A MOBILE CLOSURE SHALL BE USED FOR ANY WORK ACTIVITY THAT MOVES CONTINUOUSLY OR INTERMITTENTLY ALONG THE TRAVELED WAY OR SHOULDER SLOWER THAN THE PREVAILING SPEED OF TRAFFIC. CHANNELIZING DEVICES ARE NOT USED FOR MOBILE CLOSURES.
2. SHADOW VEHICLES SHALL BE EQUIPPED WITH AN APPROVED REAR MOUNTED ATTENUATOR (TRUCK MOUNTED OR TRAILER MOUNTED) FOR THE FOLLOWING MOBILE CLOSURES: LANE CLOSURES ON FREEWAYS, LANE CLOSURES ON NON-FREEWAY ROADWAYS HAVING A PRE-CONSTRUCTION POSTED SPEED LIMIT OF 35 MPH OR MORE, SHOULDER CLOSURES ON FREEWAYS, AND SHOULDER CLOSURES ON NON-FREEWAY ROADWAYS HAVING A PRE-CONSTRUCTION SPEED LIMIT OF 45 MPH OR MORE.
3. FOR MOBILE LANE CLOSURES ON NON-FREEWAY ROADWAYS HAVING A PRE-CONSTRUCTION POSTED SPEED LIMIT OF 30 MPH OR LESS AND MOBILE SHOULDER CLOSURES ON NON-FREEWAY ROADWAYS HAVING A PRE-CONSTRUCTION SPEED LIMIT OF 40 MPH OR LESS, SHADOW VEHICLES ARE NOT REQUIRED TO BE EQUIPPED WITH A REAR MOUNTED ATTENUATOR.
4. A SHADOW VEHICLE IS USED TO PROTECT EXPOSED WORKERS (ON FOOT OR IN A VEHICLE) AND SHALL BE REQUIRED FOR ALL MOBILE CLOSURES. SHADOW VEHICLE REQUIREMENTS SHALL INCLUDE PROVIDING A SEPARATE SHADOW VEHICLE FOR EACH CLOSED LANE AND EACH CLOSED PAVED SHOULDER 8' OR GREATER IN WIDTH. ADDITIONAL SHADOW VEHICLES MAY BE REQUIRED TO PROMOTE THE SAFE OPERATION OF TRAFFIC AND THE INCREASED PROTECTION OF EXPOSED WORKERS, AS DIRECTED BY THE REGIONAL DIRECTOR OR HIS/HER DESIGNEE.

TABLE 6H-4 FORMULAS FOR DETERMINING TAPER LENGTHS

SPEED LIMIT (S) (MPH)	TAPER LENGTH (L) (FT.)
(40 MPH) OR LESS	$L = WS^2 / 60$
(45 MPH) OR MORE	L = WS

L = TAPER LENGTH
W = WIDTH OF OFFSET (FT.)
S = PRECONSTRUCTION POSTED SPEED LIMIT (MPH)

STANDARD TAPER LENGTHS

LATERAL SHIFT OF TRAFFIC FLOW PATH	25 MPH	30 MPH	35 MPH	40 MPH	45 MPH	50 MPH	55 MPH	60 MPH	65 MPH	70 MPH
4	45	60	85	110	180	200	220	240	260	280
5	55	75	105	135	225	250	275	300	325	350
6	65	90	125	160	270	300	330	360	390	420
7	75	105	145	190	315	350	385	420	455	490
8	85	120	165	215	360	400	440	480	520	560
9	95	135	185	240	405	450	495	540	585	630
10	105	150	205	270	450	500	550	600	650	700
11	115	165	225	295	495	550	605	660	715	770
12	125	180	245	320	540	600	660	720	780	840

(Column headings: TEMPORARY TRAFFIC CONTROL ZONE POSTED SPEED LIMIT)

TABLE 6C-3
TAPER LENGTH FOR TEMPORARY TRAFFIC CONTROL ZONES

TYPE OF TAPER	TAPER LENGTH (L)
MERGING TAPER	L
SHIFTING TAPER	L/2
SHOULDER TAPER	L/3
ONE-LANE, TWO-WAY TRAFFIC TAPER	100 FT. MAXIMUM
DOWNSTREAM TAPER	100 FT. PER LANE

TABLE 6C-2
LONGITUDINAL BUFFER SPACE

PRECONSTRUCTION POSTED SPEED LIMIT (MPH)	DISTANCE
25	155 FT.
30	200 FT.
35	250 FT.
40	305 FT.
45	360 FT.
50	425 FT.
55	495 FT.
60	570 FT.
65	645 FT.

TABLE NY2-A
PLACEMENT DISTANCE FOR BARRIER VEHICLES

PRECONSTRUCTION POSTED SPEED LIMIT (MPH)	(18000 LBS.) MINIMUM	(18000 LBS.) MAXIMUM	(24000 LBS.) MINIMUM	(24000 LBS.) MAXIMUM
> 55	100 FT.	200 FT.	100 FT.	200 FT.
45 - 55	100 FT.	200 FT.	85 FT.	165 FT.
< 45	85 FT.	165 FT.	50 FT.	100 FT.

(PLACEMENT DISTANCE (FT.) — BARRIER VEHICLES•)

• AS DEFINED IN NYSDOT STANDARD SPECIFICATION 619:

BARRIER VEHICLE - VEHICLE USED FOR STATIONARY SHOULDER CLOSURES, LANE CLOSURES, AND OTHER STATIONARY WORK ZONES.

MINIMUM DISTANCE SHOWN REFLECTS THE ACTUAL ROLL AHEAD DISTANCE FROM MANUFACTURER.

TABLE NY2-B
PLACEMENT DISTANCE FOR SHADOW VEHICLES

PRECONSTRUCTION POSTED SPEED LIMIT (MPH)	(18000 LBS.) MINIMUM	(18000 LBS.) MAXIMUM	(24000 LBS.) MINIMUM	(24000 LBS.) MAXIMUM
> 55	230 FT.	330 FT.	180 FT.	280 FT.
45 - 55	180 FT.	280 FT.	150 FT.	250 FT.
< 45	100 FT.	200 FT.	100 FT.	200 FT.

(PLACEMENT DISTANCE (FT.) — SHADOW VEHICLES••)

• AS DEFINED IN NYSDOT STANDARD SPECIFICATION 619:

SHADOW VEHICLE - VEHICLE USED FOR MOBILE OR SHORT DURATION WORK OPERATIONS.

MINIMUM DISTANCE SHOWN REFLECTS THE ACTUAL ROLL AHEAD DISTANCE FROM MANUFACTURER.

TABLE 619-4
FLARE RATES FOR POSITIVE BARRIER

TYPE OF POSITIVE BARRIER	30 MPH	40 MPH	50 MPH	55 MPH	65 MPH
TEMPORARY CONCRETE BARRIER	8:1	11:1	14:1	16:1	20:1
BOX BEAM OR HEAVY POST CORRUGATED BEAM	7:1	9:1	11:1	12:1	15:1

(POSTED SPEED LIMIT)

TABLE NY6H-3
ADVANCE WARNING SIGN SPACING

ROAD TYPE	A (FT.)	B (FT.)	C (FT.)	XX	YY
URBAN (≤ 30 MPH•)	100	100	100	AHEAD	AHEAD
URBAN (35-40 MPH•)	200	200	200	AHEAD	AHEAD
URBAN (≥ 45 MPH•)	350	350	350	1000 FT.	AHEAD
RURAL	500	500	500	1500 FT.	1000 FT.
EXPRESSWAY / FREEWAY	1000	1500	2640	1 MILE	½ MILE

(DISTANCE BETWEEN SIGNS: A, B, C; SIGN LEGEND: XX, YY)

• PRECONSTRUCTION POSTED SPEED LIMIT

URBAN: (MEETS MORE THAN 1 OF THE FOLLOWING CRITERIA) SIDEWALKS, BICYCLE USAGE, CURBING, CLOSED DRAINAGE SYSTEMS, DRIVEWAY DENSITIES GREATER THAN 24 DRIVEWAYS PER MILE, MINOR COMMERCIAL DRIVEWAY DENSITIES OF 10 DRIVEWAYS PER MILE OR GREATER, MAJOR COMMERCIAL DRIVEWAYS, NUMEROUS RIGHT OF WAY CONSTRAINTS, HIGH DENSITY OF CROSS STREETS, 85TH PERCENTILE SPEEDS OF 45 MPH OR LESS.

RURAL: ANY AREA NOT EXHIBITING MORE THAN ONE OF THE ABOVE CHARACTERISTICS.

EXPRESSWAY: DIVIDED HIGHWAYS FOR TRAFFIC WITH FULL OR PARTIAL CONTROL OF ACCESS AND GENERALLY WITH GRADE SEPARATIONS AT MAJOR CROSSROADS.

FREEWAYS/INTERSTATE: LOCAL OR INTER REGIONAL HIGH-SPEED, DIVIDED, HIGH-VOLUME FACILITIES WITH FULL OR PARTIAL CONTROL OF ACCESS.

WORK DURATION DEFINITIONS

LONG-TERM STATIONARY IS WORK THAT OCCUPIES A LOCATION MORE THAN 3 CONSECUTIVE DAYS.

INTERMEDIATE-TERM STATIONARY IS WORK THAT OCCUPIES A LOCATION MORE THAN ONE DAYLIGHT PERIOD UP TO 3 CONSECUTIVE DAYS, OR NIGHTTIME WORK LASTING MORE THAN 1 HOUR.

SHORT-TERM STATIONARY IS DAYTIME WORK THAT OCCUPIES A LOCATION FOR MORE THAN 1 HOUR WITHIN A SINGLE DAYLIGHT PERIOD.

SHORT DURATION IS WORK THAT OCCUPIES A LOCATION UP TO 1 HOUR.

MOBILE IS WORK THAT MOVES INTERMITTENTLY OR CONTINUOUSLY.

WORK ZONE TRAFFIC CONTROL LEGEND

SYMBOL	DESCRIPTION
	ARROW PANEL
	ARROW PANEL, CAUTION MODE
	ARROW PANEL TRAILER OR SUPPORT
	CHANGEABLE MESSAGE SIGN (PVMS)
	CHANNELIZING DEVICE
	CRASH CUSHION/TEMPORARY IMPACT ATTENUATOR
	DIRECTION OF TEMPORARY TRAFFIC DETOUR
	DIRECTION OF TRAFFIC
	FLAGGER
	FLAG TREE
	LUMINAIRE
	PAVEMENT MARKINGS THAT SHALL BE REMOVED FOR A LONG TERM PROJECT
	SIGN, TEMPORARY
	TEMPORARY BARRIER
	TEMPORARY BARRIER WITH WARNING LIGHTS
	TRAFFIC OR PEDESTRIAN SIGNAL
	TYPE III BARRICADE
	WARNING LIGHTS
	WORK SPACE
	WORK VEHICLE
	WORK VEHICLE WITH TRUCK MOUNTED ATTENUATOR

STATE OF NEW YORK DEPARTMENT OF TRANSPORTATION
U.S. CUSTOMARY STANDARD SHEET
WORK ZONE TRAFFIC CONTROL LEGENDS AND NOTES
APPROVED SEPTEMBER 18, 2008 | ISSUED UNDER EB 08-036
/S/ DAVID J. CLEMENTS, P.E.
DIRECTOR, OFFICE OF TRAFFIC SAFETY AND MOBILITY
619-11
EFFECTIVE DATE: 01/08/09

11 — NYSDOT SHOULDER CLOSURE 2-LANE 2-WAY ROADWAY

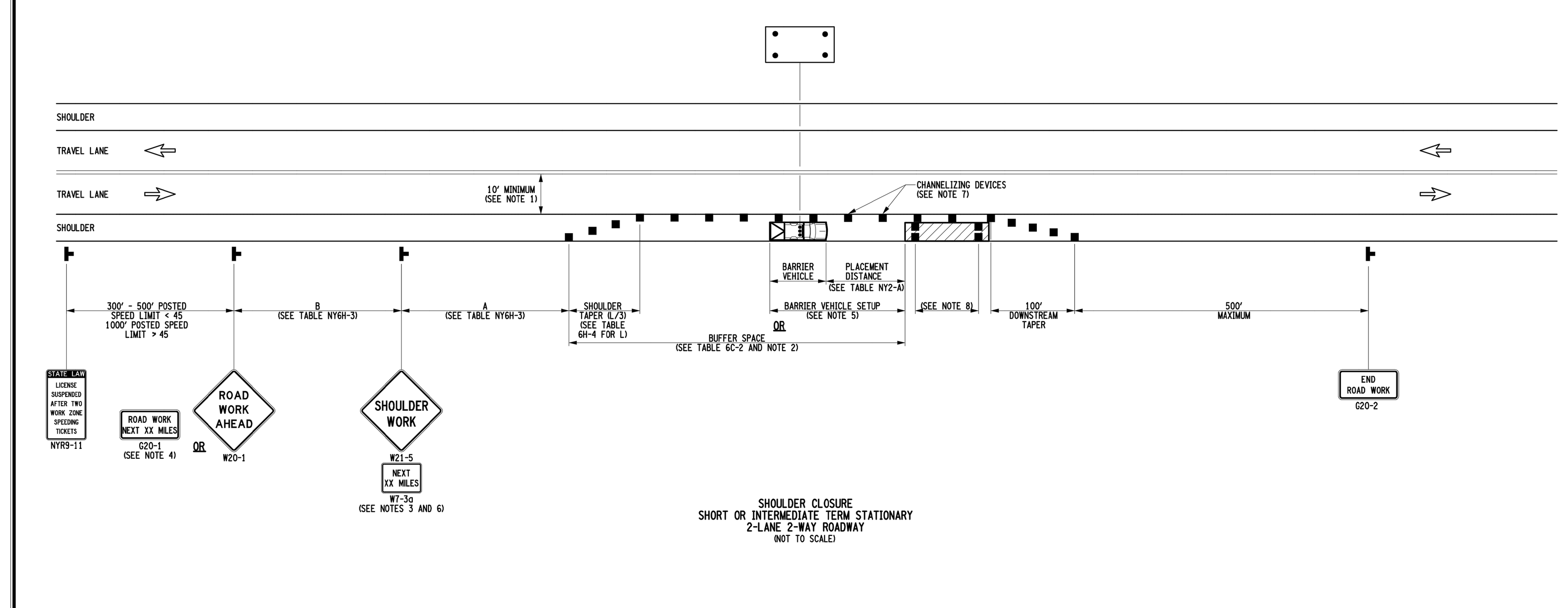

SHOULDER CLOSURE
SHORT OR INTERMEDIATE TERM STATIONARY
2-LANE 2-WAY ROADWAY
(NOT TO SCALE)

NOTES:

1. WHEN THE MINIMUM LANE WIDTH OF 10' CANNOT BE MAINTAINED DUE TO A SHOULDER CLOSURE, USE THE DETAIL FOR SHORT OR INTERMEDIATE TERM STATIONARY FLAGGING OPERATION.
2. NO WORK ACTIVITY OR STORAGE OF EQUIPMENT, VEHICLES, OR MATERIAL SHOULD OCCUR WITHIN A BUFFER SPACE.
3. WHEN THE DISTANCE BETWEEN THE ADVANCE WARNING SIGNS AND WORK IS 2 MILES TO 5 MILES, A SUPPLEMENTAL DISTANCE PLAQUE (W7-3a) SHOULD BE USED WITH THE SHOULDER WORK SIGN (W21-5).
4. THE ROAD WORK NEXT XX MILES SIGN (G20-1) MAY BE USED INSTEAD OF THE ROAD WORK AHEAD SIGN (W20-1) IF WORK LOCATIONS OCCUR OVER A DISTANCE OF MORE THAN 2 MILES.
5. FOR BARRIER VEHICLE USE REQUIREMENTS SEE TABLES NY1-A AND NY2-A ON THE STANDARD SHEET TITLED "WORK ZONE TRAFFIC CONTROL LEGENDS AND NOTES".
6. IN THOSE SITUATIONS WHERE MULTIPLE WORK LOCATIONS EXIST WITHIN A LIMITED DISTANCE MAKE IT PRACTICAL TO PLACE STATIONARY SIGNS, THE DISTANCE BETWEEN THE ADVANCE WARNING SIGN AND WORK SHALL NOT EXCEED 5 MILES.
7. CHANNELIZING DEVICE SPACING (CENTER TO CENTER) SHALL NOT EXCEED 40' IN THE ACTIVE WORK SPACE.
8. TRANSVERSE DEVICES SHALL BE REQUIRED (AS PER 619 STANDARD SPECIFICATIONS) WHEN A PAVED SHOULDER HAVING A WIDTH OF 8' OR GREATER IS CLOSED FOR A DISTANCE GREATER THAN 1500'.

NOTE: SEE STANDARD SHEET TITLED "WORK ZONE TRAFFIC CONTROL LEGENDS AND NOTES" FOR LEGEND OF SYMBOLS AND/OR LETTER CODES USED IN THIS DRAWING.

STATE OF NEW YORK DEPARTMENT OF TRANSPORTATION
U.S. CUSTOMARY STANDARD SHEET
SHOULDER CLOSURE 2-LANE 2-WAY ROADWAY
APPROVED SEPTEMBER 15, 2009 | ISSUED UNDER EB 09-025
/S/ DAVID J. CLEMENTS, P.E.
DIRECTOR, OFFICE OF TRAFFIC SAFETY AND MOBILITY
619-20
EFFECTIVE DATE: 01/07/10

X

12 — NYSDOT SIGN BLANK DETAILS

A	B	C	H	AREA (SQ. FT.)	SEE NOTE
12"	12"	8"	1½"	1.0	
18"	18"	12"	1½"	2.3	
12"	6"	4"	1½"	0.5	
12"	8"	4"	1½"	0.7	
12"	9"	4"	1½"	0.8	
18"	6"	4"	1½"	0.8	
18"	12"	6"	1½"	1.5	
6"	12"	6"	1½"	0.5	
8"	16"	10"	1½"	0.9	
9"	12"	6"	1½"	0.8	
12"	18"	12"	1½"	1.5	
12"	24"	18"	1½"	2.0	
12"	30"	24"	1½"	2.5	
12"	36"	14"	1½"	3.0	2
12"	48"	18"	1½"	4.0	2
12"	54"	24"	1½"	4.5	2
12"	60"	24"	1½"	5.0	2
18"	24"	18"	1½"	3.0	
18"	30"	24"	1½"	3.8	
18"	36"	14"	1½"	4.5	2
18"	48"	18"	1½"	6.0	2
18"	54"	24"	1½"	6.8	2
18"	60"	24"	1½"	7.5	2

A	B	C	D	H	AREA (SQ. FT.)	SEE NOTE
21"	21"	15"	15"	1½"	3.1	
24"	24"	18"	18"	1½"	4.0	
30"	30"	24"	24"	1½"	6.3	
20"	18"	12"	15"	1½"	2.5	
21"	15"	9"	15"	1½"	2.2	
24"	6"	3"	18"	1½"	1.0	
24"	8"	4"	18"	1½"	1.3	
24"	12"	6"	18"	1½"	2.0	
24"	15"	9"	18"	1½"	2.5	
24"	18"	12"	18"	1½"	3.0	
30"	10"	6"	24"	1½"	2.1	
30"	15"	9"	24"	1½"	3.1	
30"	18"	12"	24"	1½"	3.8	
30"	21"	15"	24"	1½"	4.4	
30"	24"	18"	24"	1½"	5.0	
24"	30"	22"	18"	1½"	5.0	
24"	36"	24"	18"	1½"	6.0	
30"	36"	24"	24"	1½"	7.5	
24"	54"	24"	18"	1½"	9.0	2
30"	42"	18"	24"	1½"	8.8	2

A	B	C	D	H	POST SPACING	AREA (SQ. FT.)	SEE NOTE
36"	12"	6"	15"	1½"	18"	3.0	
36"	18"	12"	15"	1½"	18"	4.5	
36"	20"	12"	15"	1½"	18"	5.0	
36"	24"	18"	15"	1½"	18"	6.0	
36"	30"	24"	15"	1½"	18"	7.5	
36"	36"	24"	15"	3"	18"	9.0	
42"	21"	12"	18"	1½"	18"	6.1	
42"	26"	18"	18"	1⅞"	18"	7.6	
42"	30"	24"	18"	1⅞"	18"	8.8	
45"	36"	24"	19½"	2¼"	24"	11.3	
48"	18"	12"	21"	1½"	24"	6.0	
48"	24"	18"	21"	1⅞"	24"	8.0	
48"	30"	24"	21"	2¼"	24"	10.0	
48"	36"	24"	21"	2¼"	24"	12.0	
54"	18"	12"	24"	1⅞"	24"	6.8	
60"	24"	18"	27"	2¼"	30"	10.0	
60"	30"	24"	27"	2¼"	30"	12.5	
36"	48"	18"	15"	2¼"	18"	12.0	2
36"	54"	24"	15"	2¼"	18"	13.5	2
36"	60"	24"	15"	2¼"	18"	15.0	2
42"	60"	24"	18"	3"	24"	17.5	2
48"	60"	24"	21"	3"	24"	20.0	2
42"	42"	18"	21"	3"	24"	12.3	2
48"	48"	18"	21"	3"	24"	16.0	2
60"	48"	18"	27"	3"	30"	20.0	2
64"	42"	18"	27"	3"	30"	18.7	2

A	B	C	D	E	G	H	POST SPACING	AREA (SQ. FT.)	PAYMENT AREA (SQ. FT.)
40"	30"	10"				1⅞"	9"	3.8	7.1
48"	36"	12"				2"	12"	5.5	10.3
64"	48"	11"	6"	18"	17"	3"	12"	9.7	18.1

A	C	D	E	G	H	POST SPACING	AREA (SQ. FT.)	PAYMENT AREA (SQ. FT.)
30"	16"	12"	12"	4"	1⅞"		4.6	6.3
36"	18"	18"	15"	4"	2¼"	18"	6.6	9.0
48"	24"	24"	21"	6"	3"	24"	11.6	16.0

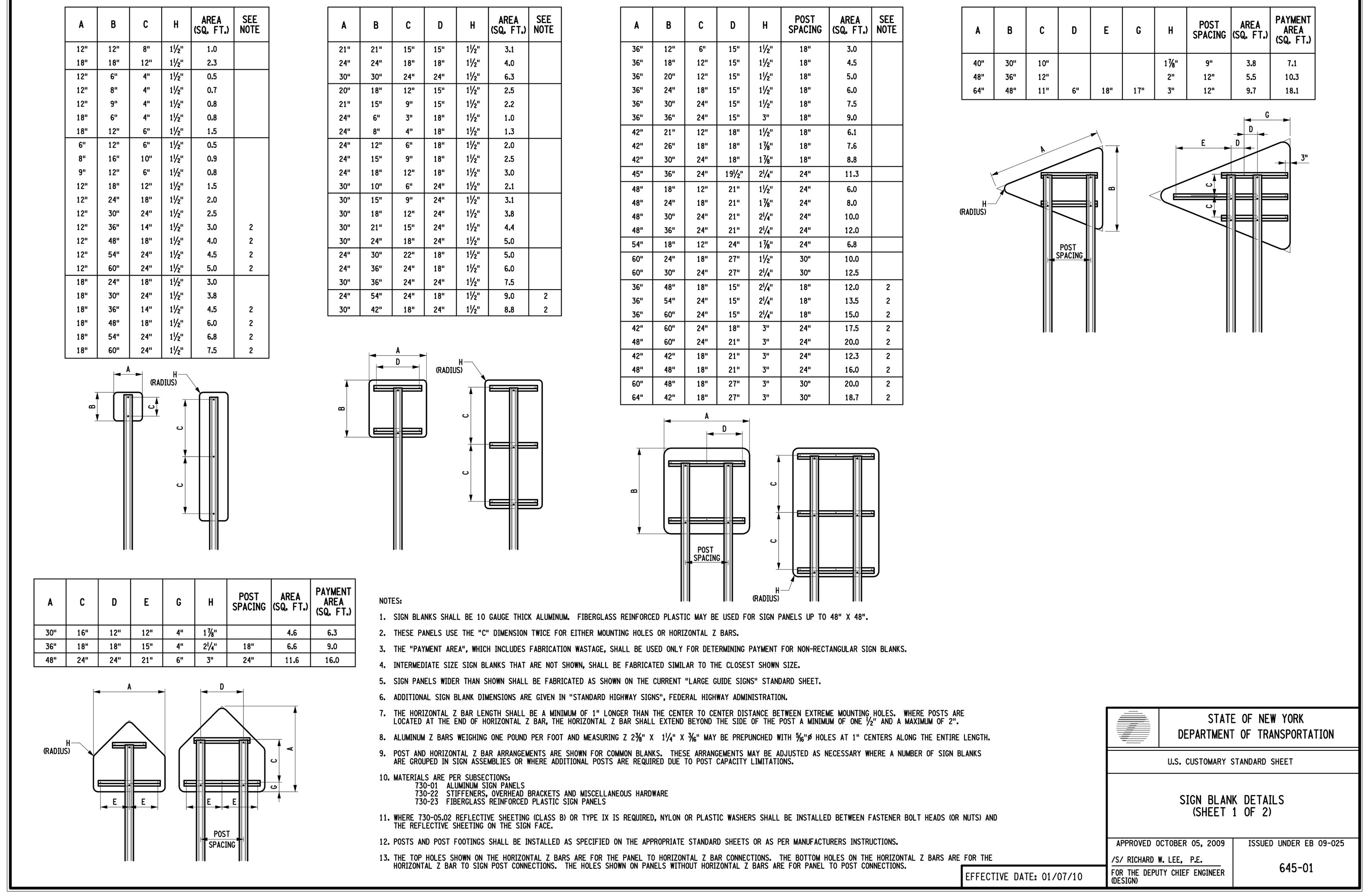

NOTES:

1. SIGN BLANKS SHALL BE 10 GAUGE THICK ALUMINUM. FIBERGLASS REINFORCED PLASTIC MAY BE USED FOR SIGN PANELS UP TO 48" X 48".
2. THESE PANELS USE THE "C" DIMENSION TWICE FOR EITHER MOUNTING HOLES OR HORIZONTAL Z BARS.
3. THE "PAYMENT AREA", WHICH INCLUDES FABRICATION WASTAGE, SHALL BE USED ONLY FOR DETERMINING PAYMENT FOR NON-RECTANGULAR SIGN BLANKS.
4. INTERMEDIATE SIZE SIGN BLANKS THAT ARE NOT SHOWN, SHALL BE FABRICATED SIMILAR TO THE CLOSEST SHOWN SIZE.
5. SIGN PANELS WIDER THAN SHOWN SHALL BE FABRICATED AS SHOWN ON THE CURRENT "LARGE GUIDE SIGNS" STANDARD SHEET.
6. ADDITIONAL SIGN BLANK DIMENSIONS ARE GIVEN IN "STANDARD HIGHWAY SIGNS", FEDERAL HIGHWAY ADMINISTRATION.
7. THE HORIZONTAL Z BAR LENGTH SHALL BE A MINIMUM OF 1" LONGER THAN THE CENTER TO CENTER DISTANCE BETWEEN EXTREME MOUNTING HOLES. WHERE POSTS ARE LOCATED AT THE END OF HORIZONTAL Z BAR, THE HORIZONTAL Z BAR SHALL EXTEND BEYOND THE SIDE OF THE POST A MINIMUM OF ONE ½" AND A MAXIMUM OF 2".
8. ALUMINUM Z BARS WEIGHING ONE POUND PER FOOT AND MEASURING Z 2⅜" X 1¼" X ⅜" MAY BE PREPUNCHED WITH ⅜"ø HOLES AT 1" CENTERS ALONG THE ENTIRE LENGTH.
9. POST AND HORIZONTAL Z BAR ARRANGEMENTS ARE SHOWN FOR COMMON BLANKS. THESE ARRANGEMENTS MAY BE ADJUSTED AS NECESSARY WHERE A NUMBER OF SIGN BLANKS ARE GROUPED IN SIGN ASSEMBLIES OR WHERE ADDITIONAL POSTS ARE REQUIRED DUE TO POST CAPACITY LIMITATIONS.
10. MATERIALS ARE PER SUBSECTIONS:
    730-01 ALUMINUM SIGN PANELS
    730-22 STIFFENERS, OVERHEAD BRACKETS AND MISCELLANEOUS HARDWARE
    730-23 FIBERGLASS REINFORCED PLASTIC SIGN PANELS
11. WHERE 730-05.02 REFLECTIVE SHEETING (CLASS B) OR TYPE IX IS REQUIRED, NYLON OR PLASTIC WASHERS SHALL BE INSTALLED BETWEEN FASTENER BOLT HEADS (OR NUTS) AND THE REFLECTIVE SHEETING ON THE SIGN FACE.
12. POSTS AND POST FOOTINGS SHALL BE INSTALLED AS SPECIFIED ON THE APPROPRIATE STANDARD SHEETS OR AS PER MANUFACTURERS INSTRUCTIONS.
13. THE TOP HOLES SHOWN ON THE HORIZONTAL Z BARS ARE FOR THE PANEL TO HORIZONTAL Z BAR CONNECTIONS. THE BOTTOM HOLES ON THE HORIZONTAL Z BARS ARE FOR THE HORIZONTAL Z BAR TO SIGN POST CONNECTIONS. THE HOLES SHOWN ON PANELS WITHOUT HORIZONTAL Z BARS ARE FOR PANEL TO POST CONNECTIONS.

STATE OF NEW YORK DEPARTMENT OF TRANSPORTATION
U.S. CUSTOMARY STANDARD SHEET
SIGN BLANK DETAILS (SHEET 1 OF 2)
APPROVED OCTOBER 05, 2009 | ISSUED UNDER EB 09-025
/S/ RICHARD W. LEE, P.E.
FOR THE DEPUTY CHIEF ENGINEER (DESIGN)
645-01
EFFECTIVE DATE: 01/07/10

13 — NYSDOT PAVEMENT MARKING DETAILS

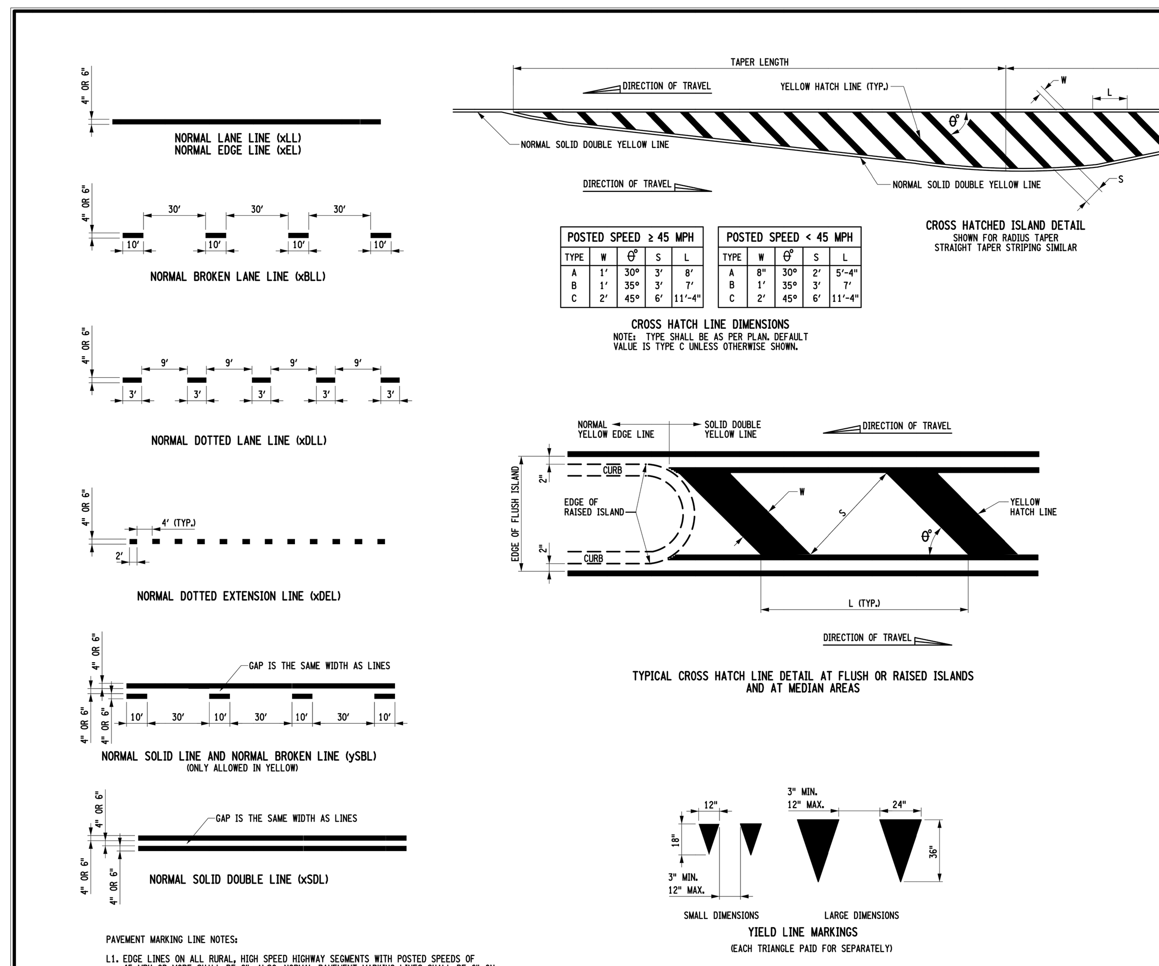

POSTED SPEED ≥ 45 MPH TYPE	W	θ°	S	L
A	1'	30°	3'	8'
B	1'	35°	3'	7'
C	2'	45°	6'	11'-4"

POSTED SPEED < 45 MPH TYPE	W	θ°	S	L
A	8"	30°	2'	5'-4"
B	1'	35°	3'	7'
C	2'	45°	6'	11'-4"

CROSS HATCH LINE DIMENSIONS
NOTE: TYPE SHALL BE AS PER PLAN. DEFAULT VALUE IS TYPE C UNLESS OTHERWISE SHOWN.

PAVEMENT MARKING LINE NOTES:

L1. EDGE LINES ON ALL RURAL, HIGH SPEED HIGHWAY SEGMENTS WITH POSTED SPEEDS OF 45 MPH OR MORE SHALL BE 6". ALSO, NORMAL PAVEMENT MARKING LINES SHALL BE 6" ON FREEWAYS AND EXPRESSWAYS AND ON RAMPS TO AND FROM FREEWAYS AND EXPRESSWAYS, AND WHERE SPECIFIED IN THE CONTRACT DOCUMENTS. AT ALL OTHER LOCATIONS NORMAL PAVEMENT MARKING LINES SHALL BE 4". WIDE PAVEMENT MARKING LINES SHALL BE TWICE AS WIDE AS NORMAL LINES ON THE SAME HIGHWAY. CHANNELIZING LINES ARE THE SAME WIDTH AS WIDE LINES.

L2. PAVEMENT MARKING LINE CODES MAY BE SHOWN ON THE PLANS. DESIGNATIONS:
"W"=WHITE "Y"=YELLOW "WIDE"=WIDE

GENERAL PAVEMENT MARKING NOTES:

1. ALL PAVEMENT MARKINGS SHALL BE PLACED IN ACCORDANCE WITH THE MUTCD AND NYS SUPPLEMENT.
2. EDGE LINES SHALL BE YELLOW ON THE LEFT SIDE AND WHITE ON THE RIGHT SIDE IN THE DIRECTION OF TRAVEL UNLESS OTHERWISE SHOWN ON THE PLANS. IF THE CURB OFFSET IS LESS THAN 2'-0", NO EDGE LINE SHALL BE APPLIED ADJACENT TO CURBS UNLESS OTHERWISE SHOWN ON THE PLANS. EDGE LINES SHALL BE PROVIDED AT THE CURB ADJACENT TO RAISED ISLANDS (SEE DETAIL).
3. WHERE MARKINGS NORMALLY FOLLOW A PAVEMENT JOINT, SINGLE LINE MARKINGS SHALL BE PLACED ALONG ONE SIDE OF THE JOINT. DOUBLE LINE MARKINGS SHALL STRADDLE THE JOINT. LANE LINES ON ROADWAYS WHICH ARE MORE THAN TWO LANES WIDE AND HAVE LONGITUDINAL JOINTS BETWEEN ADJACENT LANES, SHALL BE PLACED ON THE SIDE OF THE JOINT WHICH WILL OBTAIN OPTIMUM LANE WIDTHS.

   AT THE JUNCTION OF SINGLE AND DOUBLE LINE MARKINGS WHICH FOLLOW A PAVEMENT JOINT, THE SINGLE LINE SHALL BE AN EXTENSION OF EITHER OF THE DOUBLE LINES AND NOT THE SPACE BETWEEN THEM. AT THE JUNCTION OF SINGLE AND DOUBLE LINE MARKINGS WHICH DO NOT FOLLOW A PAVEMENT JOINT, THE SINGLE LINE MAY BE ALIGNED WITH THE CENTER OF THE DOUBLE LINE MARKING OR WITH EITHER LINE OF THE DOUBLE LINE.
4. ALL DIMENSIONS AND THE PLACEMENT OF ARROWS, SYMBOLS, AND TEXT SHOWN ARE TYPICAL AND SHALL APPLY UNLESS OTHERWISE INDICATED IN THE CONTRACT DOCUMENTS.
5. THE REGIONAL TRAFFIC ENGINEER WILL REVIEW AND APPROVE ANY CHANGES TO THE PAVEMENT MARKING PLANS PRIOR TO FINAL INSTALLATION. CHANGES SHALL BE SUBMITTED TWO WEEKS PRIOR TO INSTALLATION.

NEW YORK STATE OF OPPORTUNITY. | Department of Transportation
U.S. CUSTOMARY STANDARD SHEET
PAVEMENT_MARKING_DETAILS (SHEET 1 OF 9)
APPROVED AUGUST 21, 2018 | ISSUED UNDER EI 18-008
/S/ ROBERT LIMOGES P.E.
DIRECTOR, OFFICE OF TRAFFIC SAFETY AND MOBILITY
685-01

X

14 — NYSDOT U CHANNEL SIGN SUPPORTS STANDARD CAPACITY

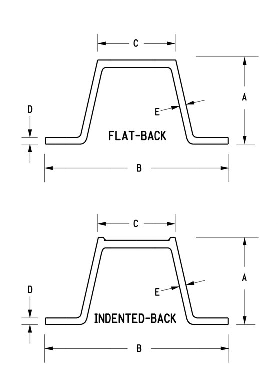

TABLE 1 : FLAT-BACK POST PROPERTIES & DIMENSIONS

POST SIZE	AREA (in^2)	I (in^4)	S (in^3)	A	B	C	D	E	MOMENT•
2.00 lb/ft	0.55	0.16	0.19	1.503	3.125	1.250	0.114	0.116	931 ft-lbs
2.50 lb/ft	0.69	0.21	0.26	1.549	3.125	1.250	0.160	0.130	1274 ft-lbs
3.00 lb/ft	0.86	0.34	0.36	1.750	3.500	1.625	0.160	0.150	1764 ft-lbs
4.00 lb/ft	1.15	0.45	0.47	1.810	3.500	1.625	0.220	0.162	2303 ft-lbs

• REDUCE MOMENT CAPACITY BY 25% TO ACCOUNT FOR TORSION EFFECTS IN OPEN CROSS-SECTION SINGLE POST INSTALLATIONS.

TABLE 2 : INDENTED-BACK POST PROPERTIES & DIMENSIONS

POST SIZE	AREA (in^2)	I (in^4)	S (in^3)	A	B	C	D	E	MOMENT•
2.00 lb/ft	0.60	0.19	0.24	1.562	3.088	1.214	0.113	0.112	931 ft-lbs
2.50 lb/ft	0.74	0.25	0.30	1.607	3.088	1.214	0.155	0.121	1274 ft-lbs
3.00 lb/ft	0.90	0.38	0.45	1.825	3.458	1.577	0.157	0.140	1764 ft-lbs
4.00 lb/ft	1.16	0.53	0.59	1.895	3.551	1.577	0.225	0.154	2303 ft-lbs

• REDUCE MOMENT CAPACITY BY 25% TO ACCOUNT FOR TORSION EFFECTS IN OPEN CROSS-SECTION SINGLE POST INSTALLATIONS.

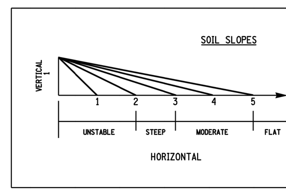

TABLE 3: MAXIMUM NUMBER OF POSTS WITHIN 7 FT.SWATH

EMBEDMENT TYPE	SOIL SLOPE	S - 1 NON-PLASTIC (MED TO VERY COMPACT) MAX NO. OF POSTS	MIN. EMBEDMENT	SOIL Ⓟ	S - 2 NON-PLASTIC (LOOSE TO VERY LOOSE) MAX NO. OF POSTS	MIN. EMBEDMENT	SOIL Ⓟ
EZE-ERECT	FLAT	2	38	NO	1	38	YES
	MODERATE	2	54	NO	1	54	YES
	STEEP	2	60	NO	1	60	YES
BASE-BOLTED	FLAT	3	38	NO	3	60	YES
	MODERATE	3	54	NO	3	60	YES
	STEEP	3	60	NO	3	60	YES

(SOIL DESCRIPTION)

POSTS SHALL BE PRODUCED FROM STANDARD "T" RAIL STEEL WEIGHING 91 LB/YD OR MORE ACCORDING TO ASTM A-499, GRADE 60, HAVING A 70 KSI MINIMUM YIELD (SEE TABLES 1 & 2). POST WEIGHT IS FROM 2.00 TO 4.00 LBS/FT BEFORE PUNCHING.

SIGN POSTS SHALL BE PUNCHED THEIR FULL LENGTH WITH 3/8" ø HOLES ON 1" CENTERS.

BASE POSTS SHALL BE PUNCHED WITH A MINIMUM OF TWENTY-FOUR 3/8" ø HOLES ON 1" CENTERS (TO ACCOMODATE OPTIONAL SOIL PLATE) WITH THE FIRST HOLE 1" FROM THE TOP. THE FIRST AND THE FIFTH HOLES SHALL BE 3/8" X 0.500" SLOTS TO FACILITATE CORRECT FIELD ALIGNMENT.

BASE POSTS SHALL BE DRIVEN TO 38" MINIMUM EMBEDMENT (SEE TABLE 3); A MAXIMUM OF 4" MAY PROTRUDE ABOVE THE SURROUNDING GROUND SURFACE.

POSTS SHALL BE HOT-DIP GALVANIZED AFTER FABRICATION IN ACCORDANCE WITH ASTM A-123.

SPLICE HARDWARE SHALL BE AS SUPPLIED OR RECOMMENDED BY THE MANUFACURER, CADMIUM PLATED ACCORDING TO ASTM A-165, TYPE OS, EXCEPT USING CLEAR CHROMATE.

ALL GALVANIZING AND GALVANIZING REPAIRS SHALL BE DONE IN ACCORDANCE WITH §719-01,TYPE III.

AN S-1 SOIL CONDITION SHOULD BE ASSUMED. S-1 INCLUDES SANDS, GRAVELS AND SILTS (AND THEIR MIXTURES) WHICH EXHIBIT PENETRATION VALUES OF 9 OR MORE BLOWS PER FOOT USING A STANDARD 300 LB. DROP HAMMER AND AN 18 INCH FALL. SHOULDER MATERIALS ARE INCLUDED IN THIS CATEGORY.

S-2 INCLUDES UNIFORM SANDS WHICH EXHIBIT PENETRATION VALUES OF LESS THAN 9 BLOWS PER FOOT USING A 300 LB. DROP HAMMER. BEACH SANDS ARE INCLUDED IN THIS CATEGORY.

THE GEOTECHNICAL ENGINEERING BUREAU AND THE STRUCTURES DIVISION SHOULD BE CONTACTED WHEN A POST IS TO BE PLACED IN A PLASTIC (SOFT CLAY OR ORGANIC) DEPOSIT, OR WHEN THE GROUNDWATER ELEVATION IS WITHIN THE MINIMUM EMBEDMENT.

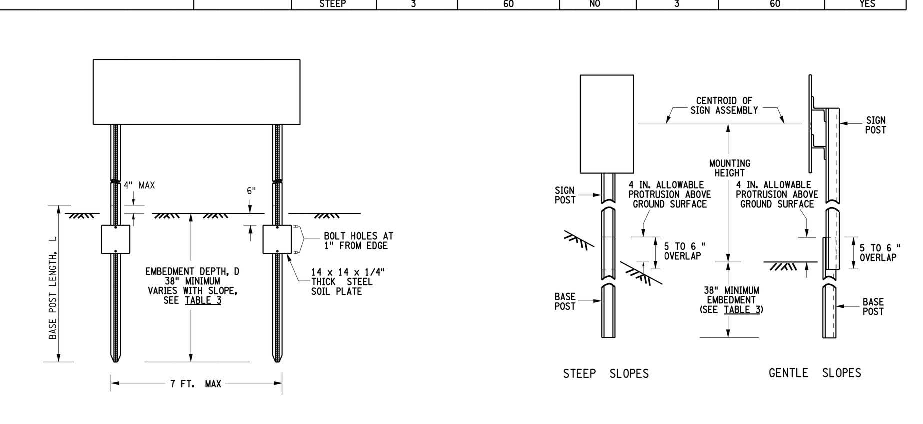

THESE DETAILS ARE SKETCH DRAWINGS AND ARE NOT TO SCALE DIMENSIONS ARE IN INCHES UNLESS OTHERWISE NOTED

STATE OF NEW YORK DEPARTMENT OF TRANSPORTATION
MATERIALS DETAILS FOR TYPE A SIGN SUPPORTS
FRANKLIN INDUSTRIES COMPANY
U CHANNEL SIGN SUPPORTS
STANDARD CAPACITY
SHEET 1 OF 5
ISSUED UNDER EB 06-021
EFFECTIVE: 05/02/2006
REVISION: ,
MD645E-FEZ-01

15 — NYSDOT U CHANNEL SIGN SUPPORTS STANDARD CAPACITY

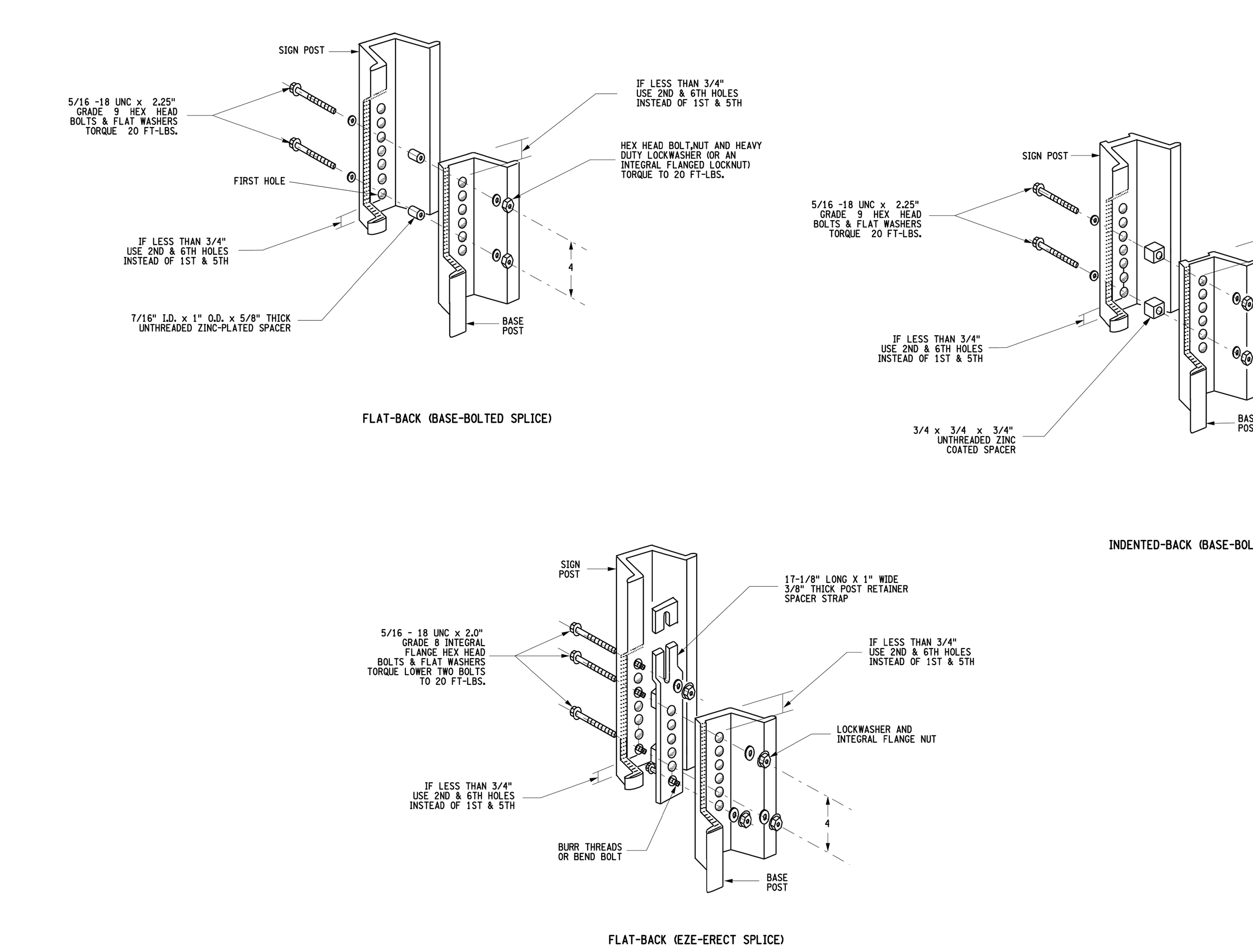

THESE DETAILS ARE SKETCH DRAWINGS AND ARE NOT TO SCALE DIMENSIONS ARE IN INCHES UNLESS OTHERWISE NOTED

STATE OF NEW YORK DEPARTMENT OF TRANSPORTATION
MATERIALS DETAILS FOR TYPE A SIGN SUPPORTS
FRANKLIN INDUSTRIES COMPANY
U CHANNEL SIGN SUPPORTS
STANDARD CAPACITY
SHEET 2 OF 5
ISSUED UNDER EB 06-021
EFFECTIVE: 05/02/2006
REVISION: ,
MD645E-FEZ-02

X

No.	Revision	Date	By

Previous Editions Obsolete

APPLICANT:
FARRELL BUILDING COMPANY
2317 MONTAUK HIGHWAY
BRIDGEHAMPTON, NY 11932

JMC Planning, Engineering, Landscape Architecture & Land Surveying, PLLC
JMC Site Development Consultants, LLC
John Meyer Consulting, Inc.
120 BEDFORD ROAD • ARMONK, NY 10504
voice 914.273.5225 • fax 914.273.2102
www.jmcpllc.com

CONSTRUCTION DETAILS (SITE ENTRANCE)
FARRELL INDUSTRIAL PARK
ROUTE 300
TOWN OF NEWBURGH, NY

ANY ALTERATION OF PLANS, SPECIFICATIONS, PLATS AND REPORTS BEARING THE SEAL OF A LICENSED PROFESSIONAL ENGINEER OR LICENSED LAND SURVEYOR IS A VIOLATION OF SECTION 7209 OF THE NEW YORK STATE EDUCATION LAW, EXCEPT AS PROVIDED FOR BY SECTION 7209, SUBSECTION 2.

Drawn: TC Approved: DL/JS
Scale: NOT TO SCALE
Date: 12/03/2020
Project No: 18156
18156-DETAILS | C-907 | –
Drawing No: C–907

COPYRIGHT © 2020 by JMC All Rights Reserved. No part of this document may be reproduced, stored in a retrieval system, or transmitted in any form or by means, electronic, mechanical, photocopying, recording or otherwise, without the prior written permission of JMC PLANNING, ENGINEERING, LANDSCAPE ARCHITECTURE & LAND SURVEYING, PLLC | JMC SITE DEVELOPMENT CONSULTANTS, LLC | JOHN MEYER CONSULTING, INC. (JMC). Any modifications or alterations to this document without the written permission of JMC shall render them invalid and unusable.
NOT FOR CONSTRUCTION

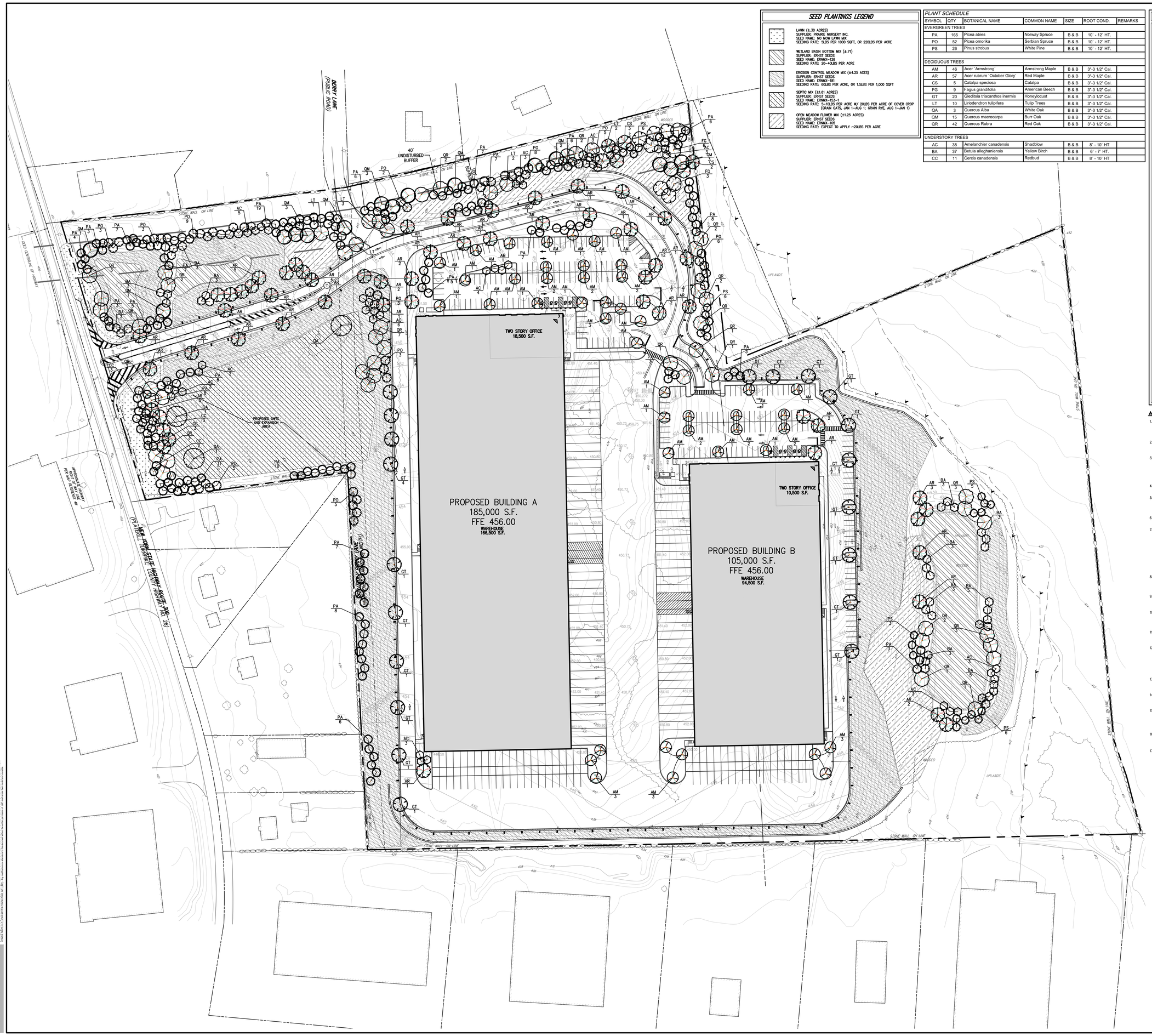

SEED PLANTINGS LEGEND

- LAWN (±.30 ACRES)
  SUPPLIER: PRAIRE NURSERY INC.
  SEED NAME: NO MOW LAWN MIX
  SEEDING RATE: 5LBS PER 1000 SQFT, OR 220LBS PER ACRE
- WETLAND BASIN BOTTOM MIX (±.7t)
  SUPPLIER: ERNST SEEDS
  SEED NAME: ERNMX-126
  SEEDING RATE: 20-40LBS PER ACRE
- EROSION CONTROL MEADOW MIX (±4.25 ACES)
  SUPPLIER: ERNST SEEDS
  SEED NAME: ERNMX-181
  SEEDING RATE: 60LBS PER ACRE, OR 1.5LBS PER 1,000 SQFT
- SEPTIC MIX (±1.61 ACRES)
  SUPPLIER: ERNST SEEDS
  SEED NAME: ERNMX-153-1
  SEEDING RATE: 5-10LBS PER ACRE W/ 30LBS PER ACRE OF COVER CROP (GRAIN OATS, JAN 1-AUG 1; GRAIN RYE, AUG 1-JAN 1)
- OPEN MEADOW FLOWER MIX (±1.25 ACRES)
  SUPPLIER: ERNST SEEDS
  SEED NAME: ERNMX-105
  SEEDING RATE: EXPECT TO APPLY ~20LBS PER ACRE

PLANT SCHEDULE

SYMBOL	QTY	BOTANICAL NAME	COMMON NAME	SIZE	ROOT COND.	REMARKS
EVERGREEN TREES						
PA	165	Picea abies	Norway Spruce	B & B	10' - 12' HT.	
PO	52	Picea omorika	Serbian Spruce	B & B	10' - 12' HT.	
PS	26	Pinus strobus	White Pine	B & B	10' - 12' HT.	
DECIDUOUS TREES						
AM	46	Acer `Armstrong`	Armstrong Maple	B & B	3"-3 1/2" Cal.	
AR	57	Acer rubrum `October Glory`	Red Maple	B & B	3"-3 1/2" Cal.	
CS	5	Catalpa speciosa	Catalpa	B & B	3"-3 1/2" Cal.	
FG	9	Fagus grandifolia	American Beech	B & B	3"-3 1/2" Cal.	
GT	20	Gleditsia triacanthos inermis	Honeylocust	B & B	3"-3 1/2" Cal.	
LT	10	Liriodendron tulipifera	Tulip Trees	B & B	3"-3 1/2" Cal.	
QA	3	Quercus Alba	White Oak	B & B	3"-3 1/2" Cal.	
QM	15	Quercus macrocarpa	Burr Oak	B & B	3"-3 1/2" Cal.	
QR	42	Quercus Rubra	Red Oak	B & B	3"-3 1/2" Cal.	
UNDERSTORY TREES						
AC	38	Amelanchier canadensis	Shadblow	B & B	8' - 10' HT	
BA	37	Betula alleghaniensis	Yellow Birch	B & B	6' - 7' HT.	
CC	11	Cercis canadensis	Redbud	B & B	8' - 10' HT	

LEGEND

- EXISTING PROPERTY LINE
- ADJACENT PROPERTY LINE
- EXISTING SETBACK LINE
- EXISTING WETLAND LINE AND DELINEATION
- EXISTING WETLAND BUFFER
- EXISTING BUILDING OVERHANG
- EXISTING BUILDING LINE
- EXISTING PAVEMENT EDGE
- EXISTING CURB LINE
- EXISTING STONE WALL
- EXISTING RETAINING WALL
- EXISTING GUIDE RAIL
- EXISTING FENCE
- EXISTING TREE AND DESIGNATION
- EXISTING TREE LINE
- EXISTING UTILITY POLE
- EXISTING LIGHT POLE
- EXISTING SIGN
- PROPOSED BUILDING LINE
- PROPOSED CONCRETE CURB
- PROPOSED SAWCUT LINE
- PROPOSED CONCRETE APRON
- PROPOSED MULCH TRAIL
- PROPOSED RETAINING WALL (DESIGN BY OTHERS)
- PROPOSED FENCE
- PROPOSED DOUBLE ARM LIGHTING STANDARD (DESIGN BY OTHERS)
- PROPOSED SINGLE ARM LIGHTING STANDARD (DESIGN BY OTHERS)
- 2-4" WIDE YELLOW LINES 8"O.C.
- 12" WIDE WHITE STOP LINE
- TRAFFIC SIGN LOCATION & DESIGNATION
- PROPOSED DECIDUOUS TREE
- PROPOSED FLOWERING TREE
- PROPOSED EVERGREEN TREE
- PROPOSED SHRUBS/PERENNIALS
- PROPOSED SHRUB MASSING
- PROPOSED TREE LINE
- EXISTING FEATURE TO BE REMOVED

NOTES:

1. ALL PLANT MATERIAL SPECIFIED ON THE DRAWINGS SHALL BE FIRST QUALITY NURSERY GROWN STOCK, CERTIFIED TRUE TO THEIR GENUS, SPECIES AND VARIETY, ALL OF WHICH SHALL CONFORM TO THE "AMERICAN STANDARD FOR NURSERY STOCK PUBLISHED BY AMERICANHORTI (ANSI Z60.1)," LATEST EDITION.
2. ALL AREAS OF THE SITE NOT OCCUPIED BY BUILDING, PAVEMENT, OR OTHER IMPERVIOUS SURFACE, AND NOT SPECIFIED AS BEING PLANTED WITH TREES, SHRUBS OR GROUND COVER, SHALL BE LAWN.
3. ALL MULCH TO BE PLACED IN PLANTING BEDS SHALL BE CLEAN, NON-DYED, TOXIC FREE, ORGANIC MATERIAL CONSISTING OF SHREDDED HARDWOOD, ROOT MULCH SHREDDED CEDAR, OR BARK CHIPS, AS APPROVED BY THE OWNERS FIELD REPRESENTATIVE OR PROJECT LANDSCAPE ARCHITECT. THE PLACEMENT THICKNESS OF THE MULCH SHALL BE 3" AND/OR AS DIRECTED IN THE PLANTING DETAILS.
4. PLANT MATERIAL SUBSTITUTIONS SHALL NOT BE PERMITTED WITHOUT THE PROJECT LANDSCAPE ARCHITECTS WRITTEN APPROVAL.
5. ALL LANDSCAPE PLANTINGS SHALL BE MAINTAINED IN A HEALTHY GROWING CONDITION THROUGHOUT THE DURATION OF THE PROJECT. ANY PLANTING NOT SO MAINTAINED SHALL BE REPLACED WITH NEW PLANT(S) AT THE BEGINNING OF THE NEXT, IMMEDIATELY FOLLOWING PLANTING SEASON.
6. ALL PLANT MATERIAL SHALL BE SUBJECT TO THE APPROVAL OF THE PROJECT LANDSCAPE ARCHITECT AND GOVERNMENTAL AUTHORITIES HAVING JURISDICTION.
7. ALL PLANT MATERIAL STOCK SHALL BE WELL-BRANCHED AND WELL-FORMED, SOUND, VIGOROUS, HEALTHY, FREE FROM DISEASE, SUN-SCALE, WINDBURN, ABRASION, AND HARMFUL INSECTS OR INSECTS EGGS; AND SHALL HAVE HEALTHY, NORMAL UNBROKEN ROOT SYSTEMS. DECIDUOUS TREES AND SHRUBS SHALL BE SYMMETRICALLY DEVELOPED, OF UNIFORM HABIT OF GROWTH, WITH STRAIGHT TRUNKS OR STEMS, AND FREE FROM OBJECTIONABLE DISFIGUREMENTS. EVERGREEN TREES AND SHRUBS SHALL HAVE WELL-DEVELOPED SYMMETRICAL TOPS WITH TYPICAL SPREAD OF BRANCHES FOR EACH PARTICULAR SPECIES OR VARIETY. ONLY VINES AND GROUND COVER PLANTS WELL ESTABLISHED IN REMOVAL CONTAINERS, INTEGRAL CONTAINERS, OR FORMED HOMOGENEOUS SOIL SECTIONS SHALL BE USED.
8. PLANTS SHALL BE GROWN UNDER CLIMATIC CONDITIONS SIMILAR TO THOSE IN THE LOCALITY OF THE PROJECT. SOURCES OF ALL PLANT MATERIAL SHALL BE DISCLOSED TO PROJECT LANDSCAPE ARCHITECT AND OWNER PRIOR TO DELIVERY.
9. ALL PLANT MATERIAL SHALL BE BALLED AND BURLAPPED OR CONTAINER GROWN STOCK, AS SPECIFIED IN THE PLANT LIST. BAREROOT STOCK OF ANY KIND IS UNACCEPTABLE UNLESS SPECIFIED.
10. ALL LAWN AREAS (SOD OR SEED) SHALL RECEIVE A MINIMUM 6" THICK LAYER OF SCREENED TOPSOIL PRIOR TO INSTALLATION OF SOD OR SEED, UNLESS OTHERWISE SPECIFIED. TOPSOIL SHALL CONFORM TO THE PROJECT SPECIFICATIONS.
11. SOIL WITHIN ALL PLANTING BEDS SHALL BE PREPARED AS DIRECTED IN THE PLANTING DETAILS AND PROJECT SPECIFICATIONS PRIOR TO INSTALLATION OF PLANT MATERIALS.
12. THE CONTRACTOR SHALL BE RESPONSIBLE FOR MAINTAINING ALL PLANT MATERIAL IN GOOD HEALTH UNTIL THE PROJECT LANDSCAPE ARCHITECT HAS PROVIDED WRITTEN ACCEPTANCE THAT THE PLANTINGS ARE COMPLETE AND IN CONFORMANCE WITH THE PLANS. THE CONTRACTOR SHALL GUARANTEE THE SURVIVAL OF THE PLANT MATERIAL FOR A PERIOD OF ONE YEAR AFTER ACCEPTANCE BY THE PROJECT LANDSCAPE ARCHITECT, UNLESS OTHERWISE AGREED TO WITH THE OWNER.
13. ALL AREAS DISTURBED OR DAMAGED DURING THE COURSE OF THE CONTRACTORS WORK SHALL BE REPAIRED OR RESTORED TO ORIGINAL OR CONSTRUCTED CONDITION AT NO ADDITIONAL COST TO OWNER.
14. FINAL LOCATION OF ALL PLANT MATERIALS SHALL BE SUBJECT TO APPROVAL BY PROJECT LANDSCAPE ARCHITECT. PROJECT LANDSCAPE ARCHITECT MAY ADJUST SPACING AND LOCATION IN FIELD PRIOR TO OR AFTER PLANTING.
15. CONTRACTOR SHALL IMMEDIATELY REPORT ANY UNSATISFACTORY SITE CONDITIONS TO THE OWNER IN WRITING. CONTRACTOR SHALL RECEIVE NO ADDITIONAL PAYMENT FOR ADDITIONAL WORK ASSOCIATED WITH THE UNSATISFACTORY CONDITIONS IF NOT PROPERLY REPORTED AND WITHOUT PRIOR WRITTEN APPROVAL OF THE OWNER.
16. ALL TREE AND SHRUB PLANTINGS INSTALLED ADJACENT TO PARKING AREAS SHALL BE SETBACK A MINIMUM OF 24" FROM EDGE OF THE PLANT TO EDGE OF PARKING AREA.
17. ALL PLANTINGS ADJACENT TO LAWN AREAS SHALL HAVE A 6" DEEP VERTICAL CUT EDGE ALONG THE OUTSIDE OF THE PLANTING BED.

No.	Revision	Date	By

Previous Editions Obsolete

APPLICANT:

FARRELL BUILDING COMPANY
2537 WOODBURY HIGHWAY
BRIDGEHAMPTON, NY 11932

JMC Planning, Engineering, Landscape Architecture & Land Surveying, PLLC
JMC Site Development Consultants, LLC
John Meyer Consulting, Inc.
120 BEDFORD ROAD - ARMONK, NY 10504
voice 914.273.5225 - fax 914.273.2102
www.jmcpllc.com

LANDSCAPE PLAN

FARRELL INDUSTRIAL PARK
ROUTE 300
TOWN OF NEWBURGH, NY

ANY ALTERATION OF PLANS, SPECIFICATIONS, PLATS AND REPORTS BEARING THE SEAL OF A LICENSED PROFESSIONAL ENGINEER OR LICENSED LAND SURVEYOR IS A VIOLATION OF SECTION 7209 OF THE NEW YORK STATE EDUCATION LAW, EXCEPT AS PROVIDED FOR BY SECTION 7209, SUBSECTION 2.

Drawn:	TC
Approved:	DL/JS
Scale:	1" = 50'
Date:	12/03/2020
Project No:	18156
18156-LAND	L-100	LAND.scr
Drawing No:	L-100

NOT FOR CONSTRUCTION

COPYRIGHT © 2020 by JMC. All Rights Reserved. No part of this document may be reproduced, stored in a retrieval system, or transmitted in any form or by means, electronic, mechanical, photocopying, recording or otherwise, without the prior written permission of JMC PLANNING, ENGINEERING, LANDSCAPE ARCHITECTURE & LAND SURVEYING, PLLC | JMC SITE DEVELOPMENT CONSULTANTS, LLC | JMC Site Development Consultants, LLC. Any modifications or alterations to this document without the written permission of JMC shall render them invalid and unusable.

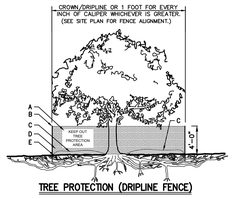

TREE PROTECTION (DRIPLINE FENCE)

A	8.5"x11" SIGN LAMINATED IN PLASTIC SPACED EVERY 50' ALONG FENCE.
B	2"x6" STEEL POSTS OR APPROVED EQUAL.
C	5" THICK LAYER OF MULCH.
D	TREE PROTECTION FENCE: HIGH DENSITY POLYETHYLENE FENCING WITH 3.5" X 1.5" OPENINGS, COLOR ORANGE, STEEL POSTS INSTALLED AT 8' O.C.
E	MAINTAIN EXISTING GRADE WITHIN THE TREE PROTECTION FENCE UNLESS OTHERWISE INDICATED ON THE PLANS.
F	INSTALL ROUGH SAWN WOOD WHERE AND AS DIRECTED BY PROJECT LANDSCAPE ARCHITECT OR PROFESSIONAL ARBORIST. SEE CHART FOR WOOD SIZE BOUND WITH 9 GAUGE WIRE.
G	8"-12" THICK LAYER OF MULCH ON MAINTENANCE ROAD. 5" THICK LAYER INSIDE TREE PROTECTION AREA.

TREE DIAMETER	ROUGH SAWN WOOD SIZE
<12"	2"x2"
13"-24"	2"x4"
>25"	2"x6"

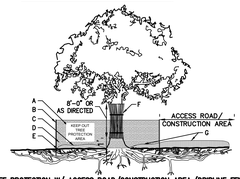

TREE PROTECTION W/ ACCESS ROAD/CONSTRUCTION AREA (DRIPLINE FENCE)

NOTES:

1. SEE SPECIFICATIONS FOR ADDITIONAL TREE PROTECTION REQUIREMENTS.
2. IF THERE IS NO EXISTING IRRIGATION, SEE SPECIFICATIONS FOR WATERING REQUIREMENTS.
3. NO PRUNING SHALL BE PERFORMED EXCEPT BY APPROVED ARBORIST.
4. NO EQUIPMENT SHALL OPERATE INSIDE THE PROTECTIVE FENCING INCLUDING DURING FENCE INSTALLATION AND REMOVAL.
5. SEE SITE PLANS FOR IDENTIFICATIONS/LOCATIONS OF INDIVIDUAL TREES TO BE PROTECTED.
6. ALL EXCAVATION WITHIN THE CROWN/DRIPLINE OF ANY TREE SHALL BE PERFORMED UNDER THE DIRECT SUPERVISION OF THE PROJECT LANDSCAPE ARCHITECT OR PROFESSIONAL ARBORIST. SPECIAL MEASURES, SUCH AS THE USE OF AN AIR SPADE MAY BE REQUIRED.
7. THE CONTRACTOR MAY PROPOSE THE USE OF ENGINEERED MATTING OR OTHER ENGINEERED PRODUCTS IN LIEU OF MULCH, WHICH SHALL BE SUBJECT TO THE REVIEW AND APPROVAL OF ALL AUTHORITIES HAVING JURISDICTION.

TREE PROTECTION 1

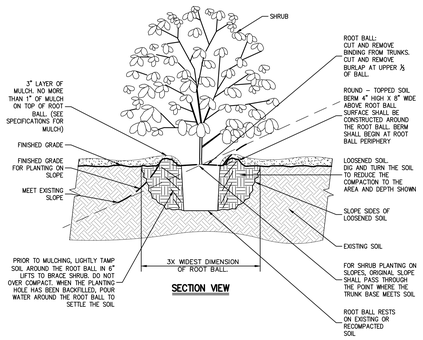

NOTES:

1. ALL PLANTING BEDS SHALL BE FREE OF WEEDS AND GRASS PRIOR TO AND FOLLOWING INSTALLATION OF PLANTS.
2. PLANTS IN CONTAINERS MUST HAVE THE FIBROUS ROOTS PULLED APART.
3. PROPOSED PLANT MATERIAL SHALL BEAR THE SAME RELATION TO FINISHED GRADE AS IT BORE TO PREVIOUS EXISTING GRADE.

SHRUB PLANTING 2

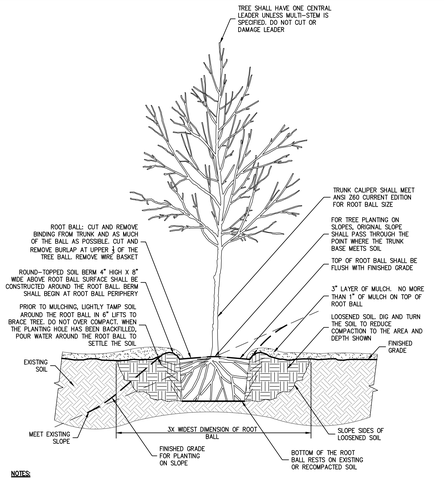

NOTES:

1. ALL PLANTING BEDS SHALL BE FREE OF WEEDS AND GRASS PRIOR TO AND FOLLOWING INSTALLATION OF PLANTS.
2. PLANTS IN CONTAINERS MUST HAVE THE FIBROUS ROOTS PULLED APART.
3. PROPOSED PLANT MATERIAL SHALL BEAR THE SAME RELATION TO FINISHED GRADE AS IT BORE TO PREVIOUS EXISTING GRADE.
4. SEE TREE STAKING DETAIL IF STAKING IS REQUIRED.

TREE PLANTING 3
(DECIDUOUS AND EVERGREEN)

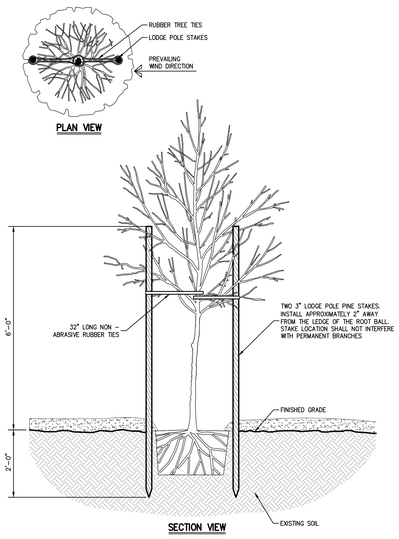

TREE STAKING 4

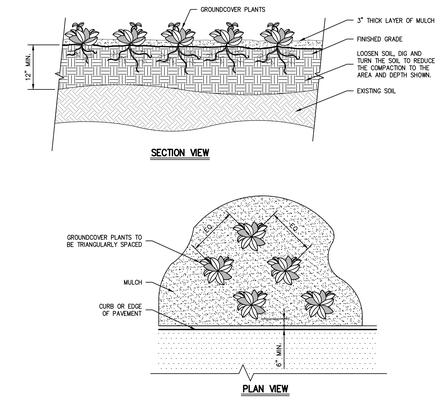

NOTES:

1. SEE PLANTING PLAN FOR GROUNDCOVER SPECIES, SIZE, AND SPACING DIMENSION.
2. SETTLE SOIL AROUND ROOT BALL OF EACH GROUNDCOVER PLANT PRIOR TO MULCHING.
3. ALL PLANTING BEDS SHALL BE FREE OF WEEDS AND GRASS PRIOR TO AND FOLLOWING INSTALLATION OF PLANTS.
4. PLANTS IN CONTAINERS MUST HAVE THE FIBROUS ROOTS PULLED APART.
5. PROPOSED PLANT MATERIAL SHALL BEAR THE SAME RELATION TO FINISHED GRADE AS IT BORE TO PREVIOUS EXISTING GRADE.

GROUND COVER PLANTING 5

No.	Revision	Date	By

Previous Editions Obsolete

APPLICANT:

FARRELL BUILDING COMPANY
277 ROUTE 32 NORTH
BRIDGEHAMPTON, NY 11932

JMC Planning, Engineering, Landscape Architecture & Land Surveying, PLLC
JMC Site Development Consultants, LLC
John Meyer Consulting, Inc.
120 BEDFORD ROAD • ARMONK, NY 10504
voice 914.273.5225 • fax 914.273.2102
www.jmcpllc.com

LANDSCAPE DETAILS

FARRELL INDUSTRIAL PARK
ROUTE 300
TOWN OF NEWBURGH, NY

ANY ALTERATION OF PLANS, SPECIFICATIONS, PLATS AND REPORTS BEARING THE SEAL OF A LICENSED PROFESSIONAL ENGINEER OR LICENSED LAND SURVEYOR IS A VIOLATION OF SECTION 7209 OF THE NEW YORK STATE EDUCATION LAW, EXCEPT AS PROVIDED FOR BY SECTION 7209, SUBSECTION 2.

Drawn:	TC	Approved:	DL/JS
Scale:	NOT TO SCALE		
Date:	12/03/2020		
Project No:	18156		
18156-DETAILS	L-900		–
Drawing No:	L–900		

NOT FOR CONSTRUCTION

COPYRIGHT © 2020 by JMC All Rights Reserved. No part of this document may be reproduced, stored in a retrieval system, or transmitted in any form or by means, electronic, mechanical, photocopying, recording or otherwise, without the prior written permission of JMC PLANNING, ENGINEERING, LANDSCAPE ARCHITECTURE & LAND SURVEYING, PLLC | JMC SITE DEVELOPMENT CONSULTANTS, LLC | JMC. Any modifications or alterations to this document without the written permission of JMC shall render them invalid and unusable.

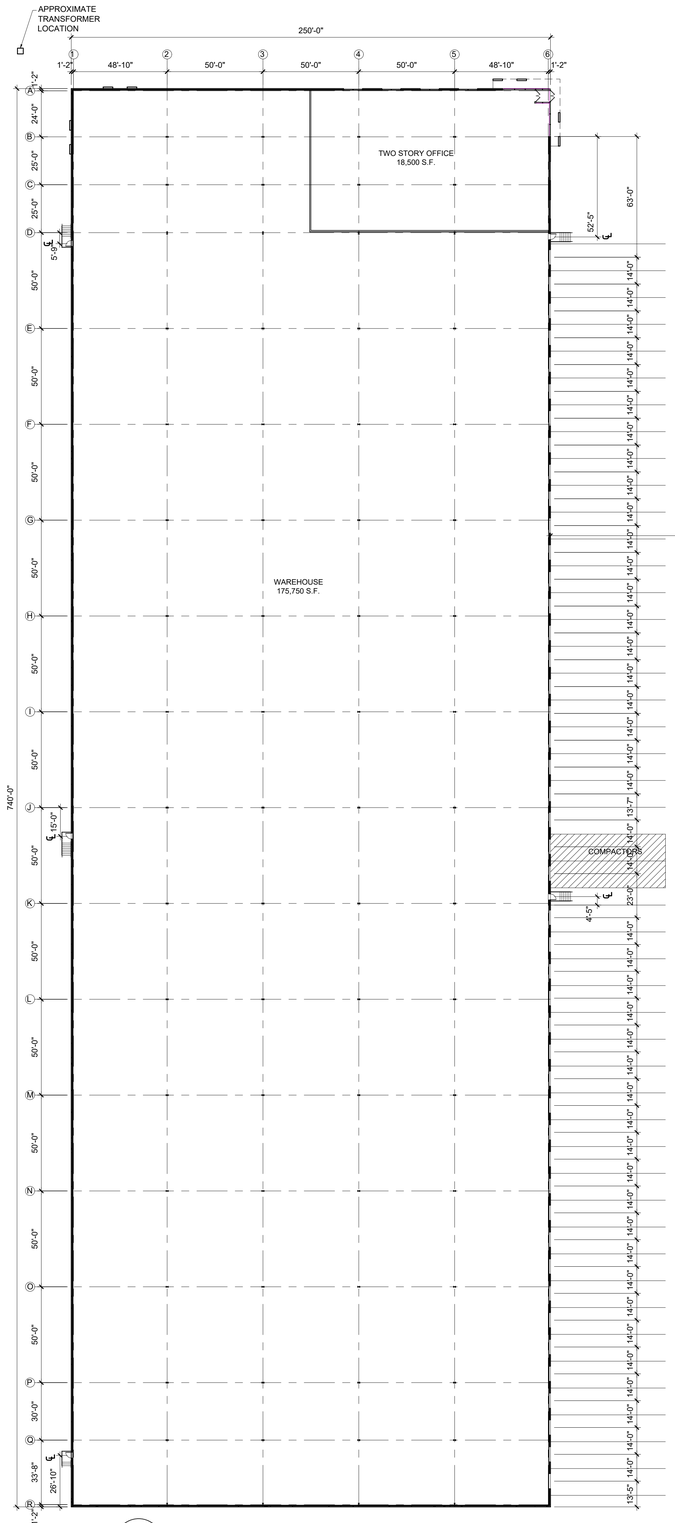

1 A101 FLOOR PLAN BUILDING A
SCALE: 1/32" = 1'-0"

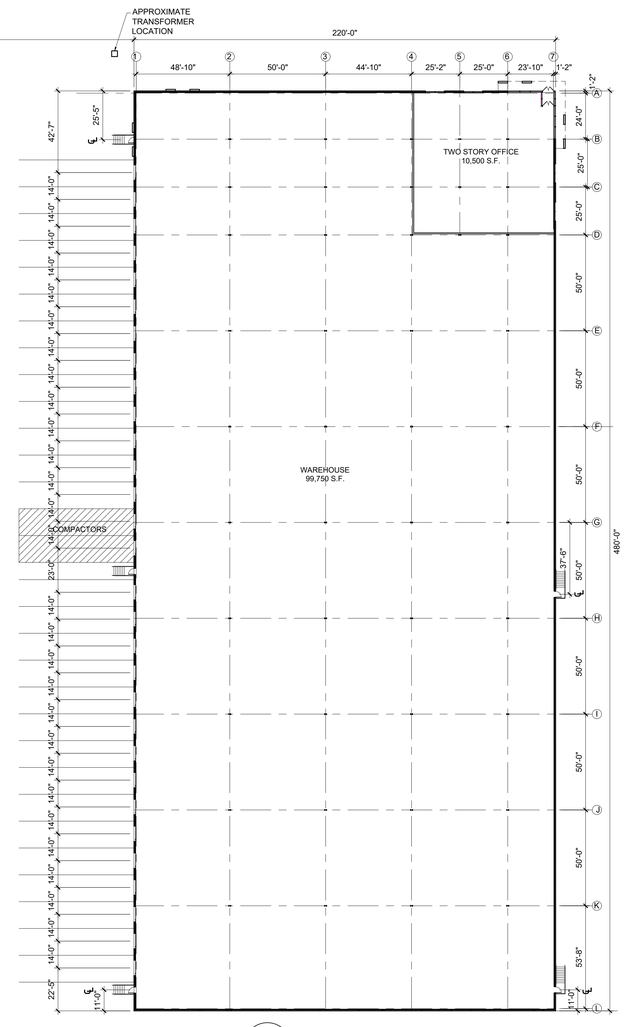

2 A101 FLOOR PLAN BUILDING B
SCALE: 1/32" = 1'-0"

CLARIS CONSTRUCTION INC
53 Church Hill Road Newtown, Connecticut 06470
Tel. 203 364 9460 Fax. 203 364 9465
www.clarisconstruction.com

THIS DRAWING IS THE PROPERTY OF CLARIS CONSTRUCTION IT HAS BEEN PREPARED SPECIFICALLY FOR THE OWNER FOR THIS PROJECT AT THIS SITE, AND IS NOT TO BE USED FOR ANY OTHER PURPOSE, LOCATION, OR OWNER WITHOUT WRITTEN CONSENT OF CLARIS

NEW BUILDINGS FOR:
FARRELLE INDUSTRIAL PARK
ROUTE 300
TOWN OF NEWBURGH, NEW YORK, 12550

No.	Description	Date

FLOOR PLANS
BUILDINGS A & B

FARRELLE

Project Number	20-25
Date	12/03/20
Drawn By	JWK
Checked By	
Scale	As Noted

A101

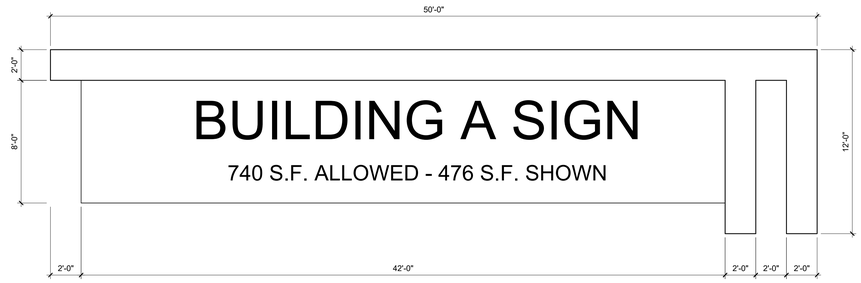

1 A-102 BUILDING A WALL MOUNTED SIGN
SCALE: 1/4" = 1'-0"

2 A-102 BUILDING B WALL MOUNTED SIGN
SCALE: 1/4" = 1'-0"

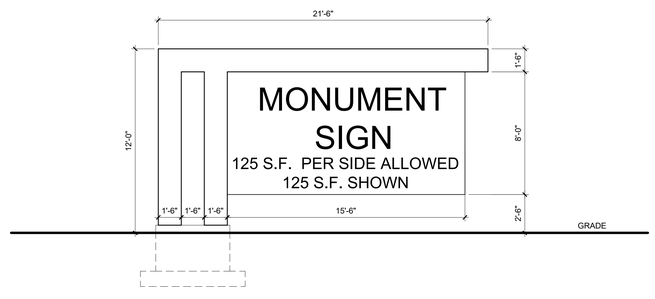

3 A-102 MONUMENT SIGN
SCALE: 1/4" = 1'-0"

CLARIS
CONSTRUCTION INC
53 Church Hill Road Newtown, Connecticut 06470
Tel. 203 364 9460 Fax. 203 364 9465
www.clarisconstruction.com

THIS DRAWING IS THE PROPERTY OF CLARIS CONSTRUCTION IT HAS BEEN PREPARED SPECIFICALLY FOR THE OWNER FOR THIS PROJECT AT THIS SITE, AND IS NOT TO BE USED FOR ANY OTHER PURPOSE, LOCATION, OR OWNER WITHOUT WRITTEN CONSENT OF CLARIS

NEW BUILDINGS FOR:
FARRELLE INDUSTRIAL PARK
ROUTE 300
TOWN OF NEWBURGH, NEW YORK, 12550

No.	Description	Date

SIGN DETAILS

FARRELLE

Project Number	20-25
Date	12/03/20
Drawn By	JWK
Checked By	
Scale	As Noted

A102

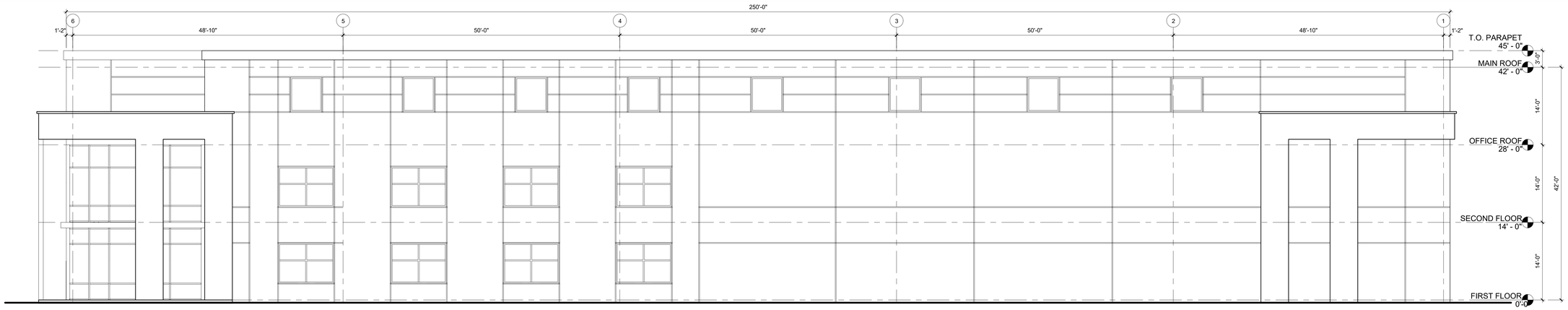

1 / A201 FRONT (NORTH) ELEVATION BUILDING A

SCALE: 1/8" = 1'-0"

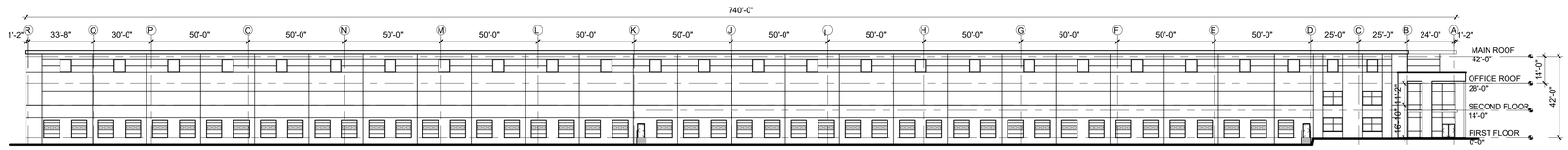

2 / A201 RIGHT (EAST) ELEVATION BUILDING A

SCALE: 1"= 30'-0"

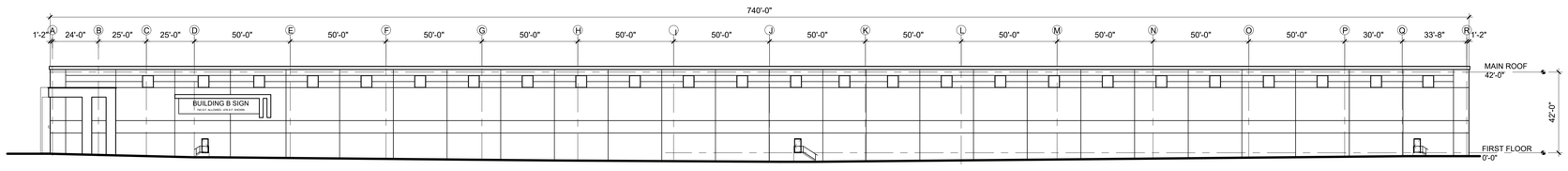

3 / A201 LEFT (WEST) ELEVATION BUILDING A

SCALE: 1"= 30'-0"

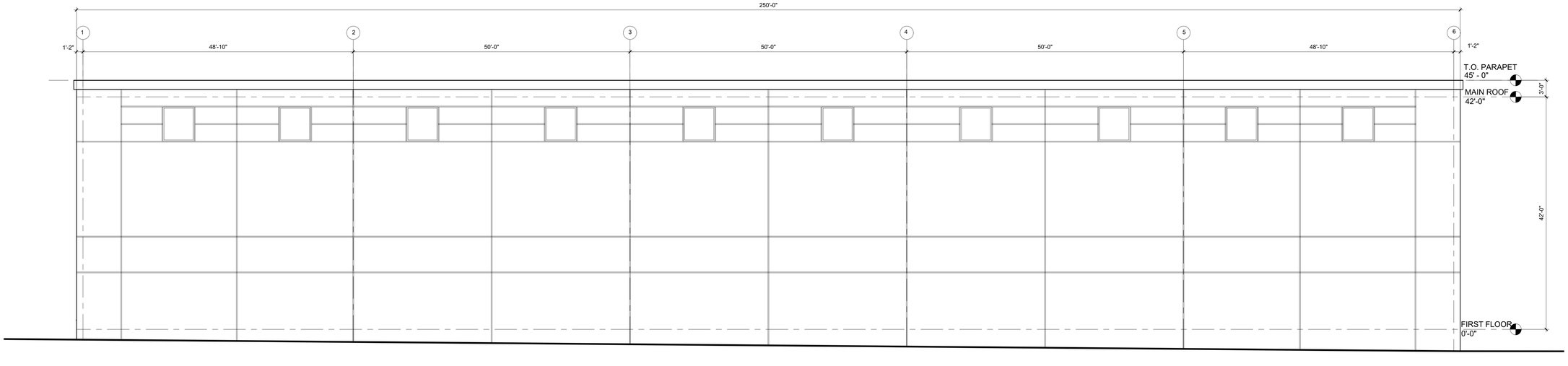

4 / A201 REAR (SOUTH) ELEVATION BUILDING A

SCALE: 1/8" = 1'-0"

CLARIS CONSTRUCTION INC
53 Church Hill Road Newtown, Connecticut 06470
Tel. 203 364 9460 Fax. 203 364 9465
www.clarisconstruction.com

THIS DRAWING IS THE PROPERTY OF CLARIS CONSTRUCTION IT HAS BEEN PREPARED SPECIFICALLY FOR THE OWNER FOR THIS PROJECT AT THIS SITE, AND IS NOT TO BE USED FOR ANY OTHER PURPOSE, LOCATION, OR OWNER WITHOUT WRITTEN CONSENT OF CLARIS

NEW BUILDINGS FOR:

FARRELLE INDUSTRIAL PARK

ROUTE 300
TOWN OF NEWBURGH, NEW YORK, 12550

No.	Description	Date

BUILDING A ELEVATIONS

FARRELLE

Project Number	20-25
Date	12/03/20
Drawn By	JWK
Checked By	
Scale	As Noted

A201

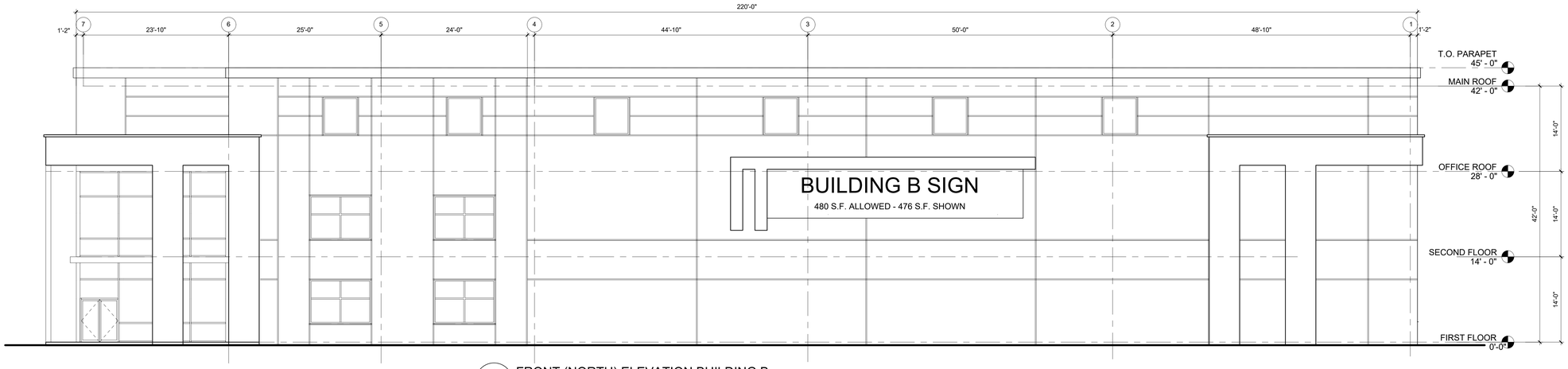

1 A202 FRONT (NORTH) ELEVATION BUILDING B
SCALE: 1/8" = 1'-0"

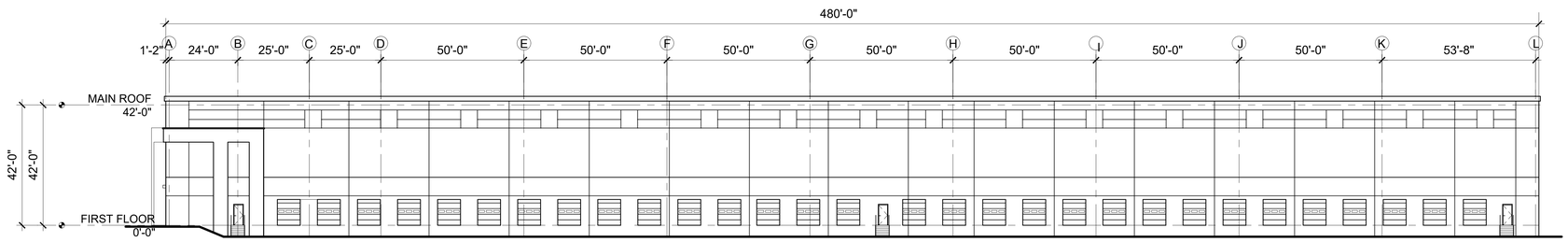

2 A202 RIGHT (EAST) ELEVATION BUILDING B
SCALE: 1"= 20'-0"

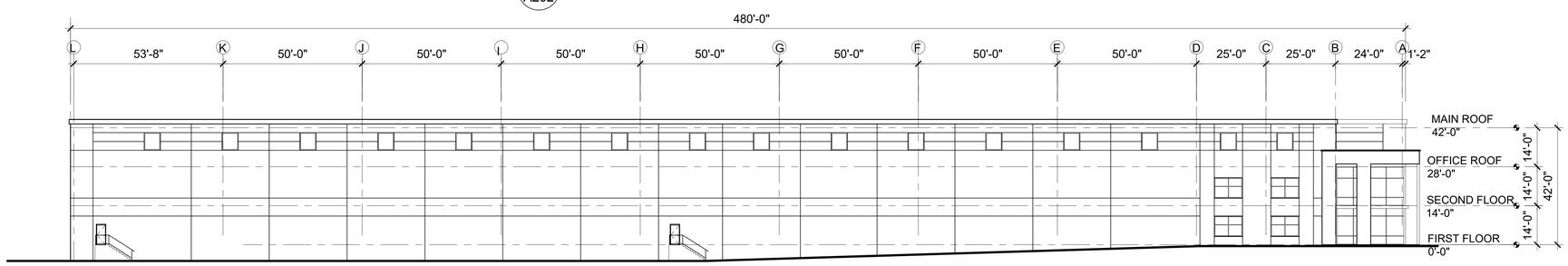

3 A202 LEFT (WEST) ELEVATION BUILDING B
SCALE: 1"= 20'-0"

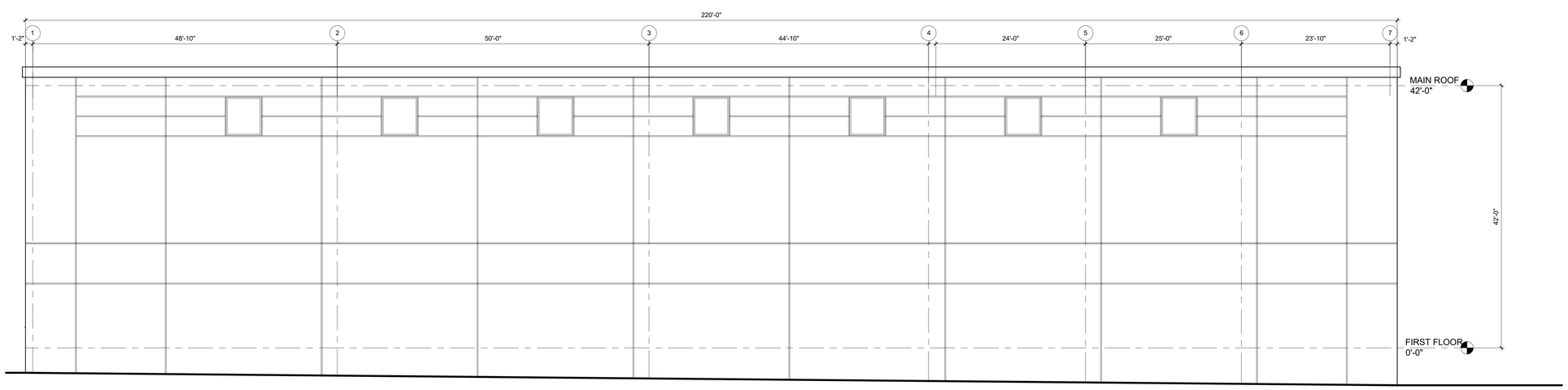

4 A202 REAR (SOUTH) ELEVATION BUILDING B
SCALE: 1/8" = 1'-0"

CLARIS CONSTRUCTION INC
53 Church Hill Road Newtown, Connecticut 06470
Tel. 203 364 9460 Fax. 203 364 9465
www.clarisconstruction.com

THIS DRAWING IS THE PROPERTY OF CLARIS CONSTRUCTION IT HAS BEEN PREPARED SPECIFICALLY FOR THE OWNER FOR THIS PROJECT AT THIS SITE, AND IS NOT TO BE USED FOR ANY OTHER PURPOSE, LOCATION, OR OWNER WITHOUT WRITTEN CONSENT OF CLARIS

NEW BUILDINGS FOR:
FARRELLE INDUSTRIAL PARK
ROUTE 300
TOWN OF NEWBURGH, NEW YORK, 12550

No.	Description	Date

BUILDING B ELEVATIONS

FARRELLE

Project Number	20-25
Date	12/03/20
Drawn By	JWK
Checked By	
Scale	As Noted

A202

CLARIS
CONSTRUCTION INC
53 Church Hill Road Newtown, Connecticut 06470
Tel. 203 364 9460 Fax. 203 364 9465
www.clarisconstruction.com

THIS DRAWING IS THE PROPERTY OF CLARIS CONSTRUCTION IT HAS BEEN PREPARED SPECIFICALLY FOR THE OWNER FOR THIS PROJECT AT THIS SITE, AND IS NOT TO BE USED FOR ANY OTHER PURPOSE, LOCATION, OR OWNER WITHOUT WRITTEN CONSENT OF CLARIS

NEW BUILDINGS FOR:

FARRELLE INDUSTRIAL PARK

ROUTE 300
TOWN OF NEWBURGH, NEW YORK, 12550

No.	Description	Date

RENDERINGS

FARRELLE

Project Number	20-25
Date	12/03/20
Drawn By	JWK
Checked By	
Scale	As Noted

A203